Product: Caterpillar DP100,DP115,DP135,DP150 Chassis & Mast Forklifts Service Reapir Workshop Manual
Full Download: https://www.arepairmanual.com/downloads/caterpillar-dp100dp115dp135dp150-chassis-mast-forklifts-service-reapir-workshop-manual/

CATERPILLAR®

99799-80110

Service Manual

DP100, DP115, DP135, DP150
Chassis & Mast

DP100 **3DP-00193-up**
DP115 **4DP-00138-up**
DP135 **5DP-00136-up**
DP150 **6DP-00363-up**

For use with 6D16
Engine Service Manual

Sample of manual. Download All 458 pages at:
https://www.arepairmanual.com/downloads/caterpillar-dp100dp115dp135dp150-chassis-mast-forklifts-service-reapir-workshop-m

Product: Caterpillar DP100,DP115,DP135,DP150 Chassis & Mast Forklifts Service Reapir Workshop Manual
Full Download: https://www.arepairmanual.com/downloads/caterpillar-dp100dp115dp135dp150-chassis-mast-forklifts-service-reapir-workshop-manual/

Sample of manual. Download All 458 pages at:
https://www.arepairmanual.com/downloads/caterpillar-dp100dp115dp135dp150-chassis-mast-forklifts-service-reapir-workshop-m

FOREWORD

This service manual is a guide to servicing of Caterpillar® Lift Trucks. The instructions are grouped by systems to serve the convenience of your ready reference.

Long productive life of your lift trucks depends to a great extent on correct servicing — the servicing consistent with what you will learn from this service manual. We hope you read the respective sections of this manual carefully and know all the components you will work on before attempting to start a test, repair or rebuild job.

The descriptions, illustrations and specifications contained in this manual were of the trucks of serial numbers in effect at the time it was approved for printing. Caterpillar reserves the right to change specifications or design without notice and without incurring obligation.

These lift trucks are powered by Mitsubishi 6D16 diesel engine. For the items of the engine, refer to the following service manual:

6D16 Diesel Engine Service Manual (Pub. No. 99709-58100)

Pub. No. 99799-80110

⚠ WARNING

SAFETY

⚠ WARNING

The proper and safe lubrication and maintenance for this machine, recommended by Caterpillar, are outlined in the OPERATION & MAINTENANCE MANUAL for these machines.

Improper performance of lubrication or maintenance procedures is dangerous and could result in injury or death. Read and understand the OPERATION & MAINTENANCE MANUAL before performing any lubrication or maintenance.

The serviceman or mechanic may be unfamiliar with many of the systems on this machine. This makes it important to use caution when performing service work. A knowledge of the system and/or components is important before the removal or disassembly of any component.

Because of the size of some of the machine components, the serviceman or mechanic should check the weights noted in this Manual. Use proper lifting procedures when removing any components.

Following is a list of basic precautions that should always be observed.

1. Read and understand all warning plates and decals on the machine before operating, lubricating or repairing the product.
2. Always wear protective glasses and protective shoes when working around machines. In particular, wear protective glasses when pounding on any part of the machine or its attachments with a hammer or sledge. Use welders gloves, hood/goggles, apron and other protective clothing appropriate to the welding job being performed. Do not wear loose-fitting or torn clothing. Remove all rings from fingers when working on machinery.
3. Do not work on any machine that is supported only by lift jacks or a hoist. Always use blocks or jack stands to support the machine before performing any disassembly.
4. Lower the forks or other implements to the ground before performing any work on the machine. If this cannot be done, make sure the forks or other implements are blocked correctly to prevent them from dropping unexpectedly.

⚠ WARNING

Do not operate this machine unless you have read and understand the instructions in the OPERATOR'S MANUAL. Improper machine operation is dangerous and could result in injury or death.

5. Use steps and grab handles (if applicable) when mounting or dismounting a machine. Clean any mud or debris from steps, walkways or work platforms before using. Always face machine when using steps, ladders and walkways. When it is not possible to use the designed access system, provide ladders, scaffolds, or work platforms to perform safe repair operations.
6. To avoid back injury, use a hoist when lifting components which weigh 23 kg [50 lb.] or more. Make sure all chains, hooks, slings, etc., are in good condition and are of the correct capacity. Be sure hooks are positioned correctly. Lifting eyes are not to be side loaded during a lifting operation.
7. To avoid burns, be alert for hot parts on machines which have just been stopped and hot fluids in lines, tubes and compartments.
8. Be careful when removing cover plates. Gradually back off the last two bolts or nuts located at opposite ends of the cover or device and pry cover loose to relieve any spring or other pressure, before removing the last two bolts or nuts completely.
9. Be careful when removing filler caps, breathers and plugs on the machine. Hold a rag over the cap or plug to prevent being sprayed or splashed by liquids under pressure. The danger is even greater if the machine has just been stopped because fluids can be hot.
10. Always use tools that are in good condition and be sure you understand how to use them before performing any service work.
11. Reinstall all fasteners with same part number. Do not use a lesser quality fastener if replacements are necessary. Do not mix metric fasteners with standard nuts and bolts.

12. If possible, make all repairs with the machine parked on a level, hard surface. Block machine so it does not roll while working on or under machine.

13. Disconnect battery and discharge any capacitors (electric trucks) before starting to work on machine. Hang "Do Not Operate" tag in the Operator's Compartment.

14. Repairs, which require welding, should be performed only with the benefit of the appropriate reference information and by personnel adequately trained and knowledgeable in welding procedures. Determine type of metal being welded and select correct welding procedure and electrodes, rods or wire to provide a weld metal strength equivalent at least to that of parent metal.

15. Do not damage wiring during removal operations. Reinstall the wiring so it is not damaged nor will it be damaged in operation by contacting sharp corners, or by rubbing against some object or hot surface. Do not connect wiring to a line containing fluid.

16. Be sure all protective devices including guards and shields are properly installed and functioning correctly before starting a repair. If a guard or shield must be removed to perform the repair work, use extra caution.

17. Always support the mast and carriage to keep carriage or attachments raised when maintenance or repair work is performed, which requires the mast in the raised position.

18. Loose or damaged fuel, lubricant and hydraulic lines, tubes and hoses can cause fires. Do not bend or strike high pressure lines or install ones which have been bent or damaged. Inspect lines, tubes and hoses carefully. Do not check for leaks with your hands. Pin hole (very small) leaks can result in a high velocity oil stream that will be invisible close to the hose. This oil can penetrate the skin and cause personal injury. Use cardboard or paper to locate pin hole leaks.

19. Tighten connections to the correct torque. Make sure that all heat shields, clamps and guards are installed correctly to avoid excessive heat, vibration or rubbing against other parts during operation. Shields that protect against oil spray onto hot exhaust components in event of a line, tube or seal failure must be installed correctly.

20. Relieve all pressure in air, oil or water systems before any lines, fittings or related items are disconnected or removed. Always make sure all raised components are blocked correctly and be alert for possible pressure when disconnecting any device from a system that utilizes pressure.

21. Do not operate a machine if any rotating part is damaged or contacts any other part during operation. Any high speed rotating component that has been damaged or altered should be checked for balance before reusing.

22. Caution should be used to avoid breathing dust that may be generated when handling components containing asbestos fibers. If this dust is inhaled, it can be hazardous to your health.

If dust which may contain asbestos is present, there are several common sense guidelines that should be followed.

a. Never use compressed air for cleaning.

b. Avoid brushing or grinding of asbestos containing materials.

c. For clean up, use wet methods or a vacuum equipped with a high efficiency particulate air (HEPA) filter.

d. Use exhaust ventilation on permanent machining jobs.

e. Wear an approved respirator if there is no other way to control the dust.

f. Comply with applicable rules and regulations for the work place.

g. Follow environmental rules and regulations for disposal of asbestos.

h. Avoid areas where asbestos particles may be in the air.

HOW TO READ THIS MANUAL

Symbols or a abbreviations

OP ..... Option
R1/4 ..... Taper pipe thread (external) 1/4 inch (formerly PT1/4)
RC1/8 ..... Taper pipe thread (internal) 1/8 inch (formerly PT1/8)
G1/4A ..... Straight pipe thread (external) 1/4 inch (formerly PF1/4-A)
Rp1/8 ..... Straight pipe thread (internal) 1/8 inch (formerly PS1/8)

TABLE OF CONTENTS

	Information contained
General information	Model view; truck models covered; nameplate and serial number locations; technical data; dimensions (approximate)
Cooling system	Radiator
Electrical system	Console box; side instrument panels; fuses; light bulbs; batteries
Power train	Engine & transmission combination
2-speed powershift transmission	Torque converter; transmission; control valve; regulator valve
3-speed powershift transmission	Torque converter; transmission; control valve; regulator valve
Front axle and reduction differential	Front wheels; front axle; reduction differential
Rear axle	Rear wheels; rear axle; power cylinder
Brake system	Service brakes; parking brake; wheel cylinders; air master; air dryer
Steering system	Steering control valve
Hydraulic system	Hydraulic tank; gear pump; priority valve; control valve; flow regulator valve; lift cylinders; tilt cylinders
Masts and forks	Simplex masts (dual-stage panoramic masts)
Hydraulic fork positioners	Fork positioner assembly; hydraulic cylinders
Hydraulic side shifters	Side shifter assembly; hydraulic cylinder
Service data	Maintenance chart; tightening torques; periodic replacement parts; lubrication instructions; weight of major components; special tools; inspection guide

GENERAL INFORMATION

MODEL VIEW 1
TRUCK MODELS COVERED 1
NAMEPLATE AND SERIAL NUMBER LOCATIONS 2
TECHNICAL DATA 3
DIMENSIONS (APPROXIMATE) 4

MODEL VIEW

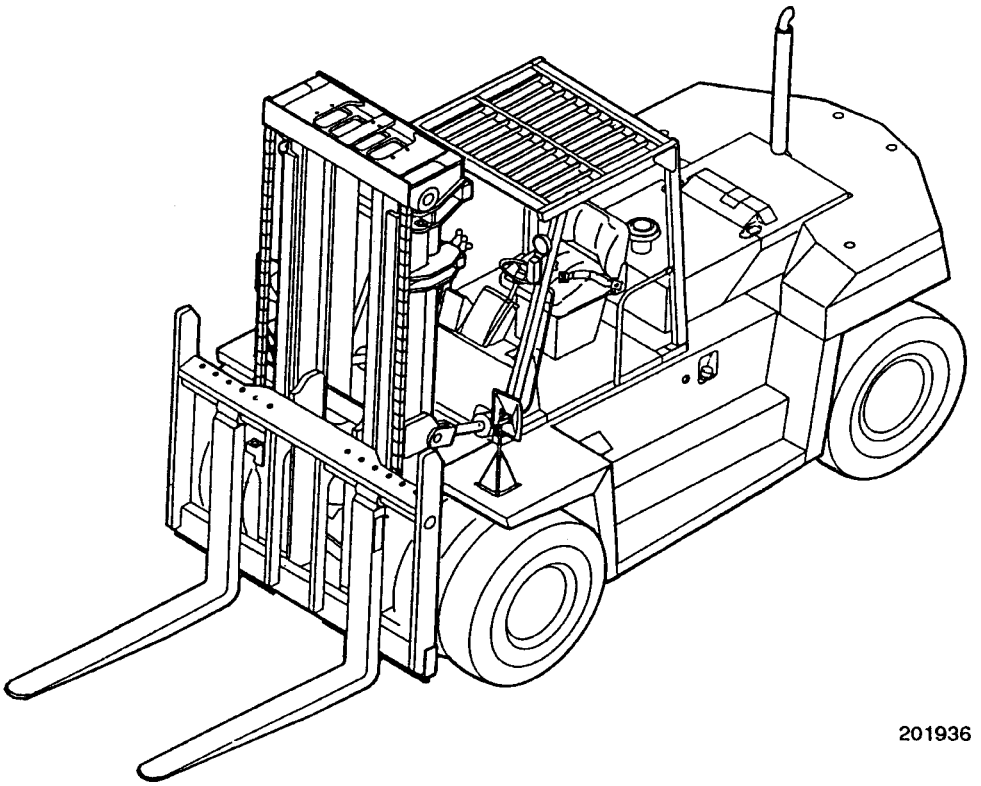

TRUCK MODELS COVERED

This Service Manual furnishes servicing and maintenance information for the following trucks:

Truck model	Transmission	Designation–Serial number	Engine mounted
DP100	Powershift	3DP–00193-up	Mitsubishi 6D16 diesel engine
DP115		4DP–00138-up	
DP135		5DP–00136-up	
DP150		6DP–00363-up	

NAMEPLATE AND SERIAL NUMBER LOCATIONS

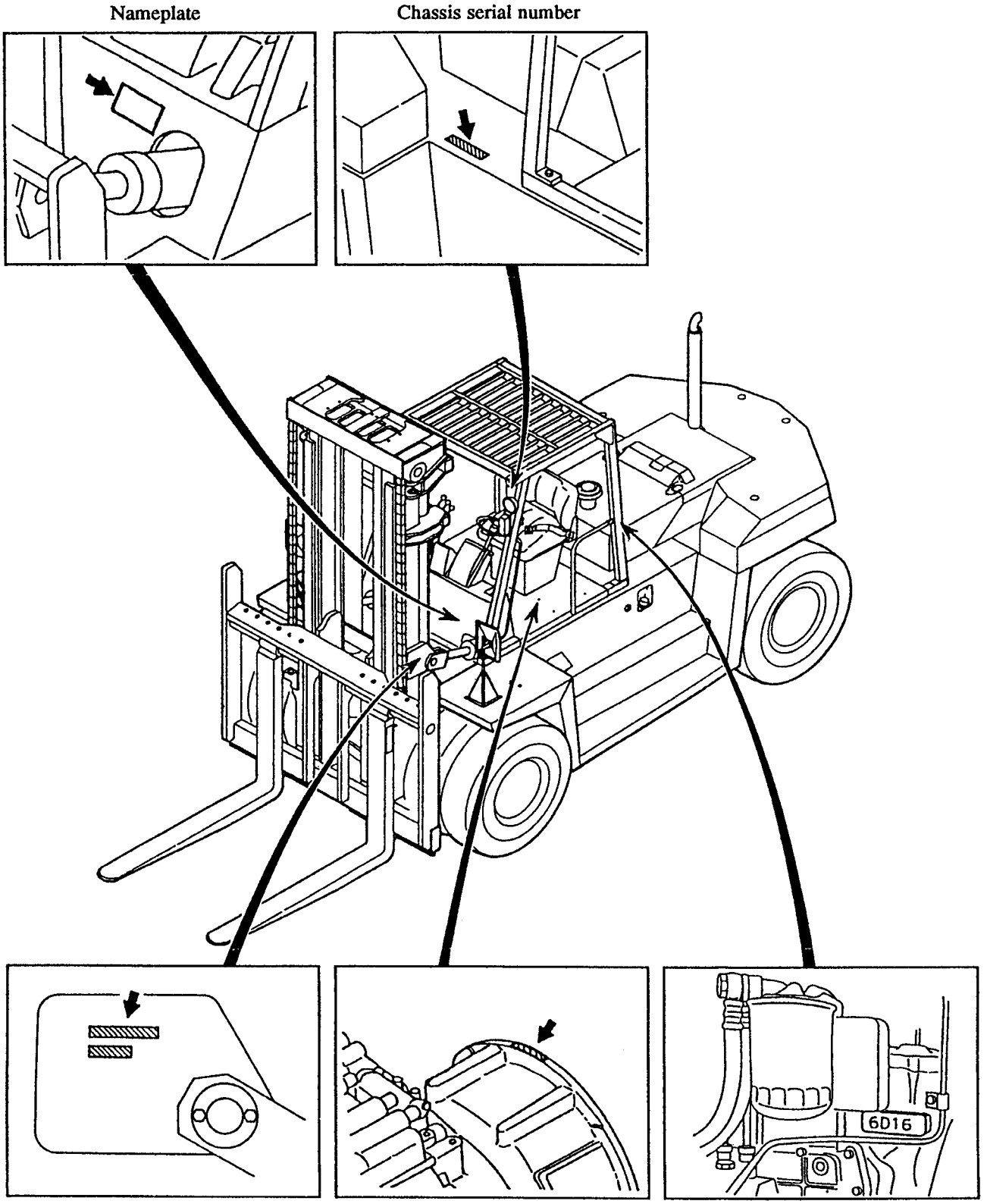

206176

TECHNICAL DATA

Item \ Truck model			DP100	DP115	DP135	DP150
Designation			3DP	4DP	5DP	6DP
Type			Standard (with 3-speed powershift transmission)			
General	Capacity/load center, kg/mm [lb/in.]		10 000/600 [22 000/24]	11 500/600 [25 000/24]	13 500/600 [30 000/24]	15 000/600 [33 000/24]
	Lift, mm [in.]		3 300 [130]			
	Lift speed (empty/loaded), mm/sec [fpm]		360/330 [71/65]	360/340 [71/67]	310/290 [61/57]	310/280 [61/55]
	Lowering speed (empty/loaded), mm/sec [fpm]		500/450 [98/89]		420/380 [83/75]	
	Tilt angle (forward – backward)		15° – 12°			
	Free lift, mm [in.]		0			
Performance	Travel speeds (empty/loaded), km/h [mph]	Forward	31.5/24.5 [20/15]			33.0/22.0 [20/14]
		Reverse				
	Minimum turning radius, mm [in.]		4 000 [157]	4 060 [160]	4 160 [164]	4 550 [179]
	Turning angle	Inside	78°27'			
		Outside	51°14'			
	Minimum aisle 90° stack, mm [in.]		3 550 [140]	3 590 [141]	3 680 [145]	3 830 [151]
	Gradeability (rated load)	At 1.6 km/h [1 mph]	32%	29%	23%	
Tires, size and inflation, kPa (kgf/cm²) [psi]		Front (dual)	10.00-20-14 NHS 686 (7.0) [100]	10.00-20-16 NHS 785 (8.0) [114]	12.00-20-18 NHS 785 (8.0) [114]	
		Rear				
Weight and axle load	Empty, kg [lb]	Weight	14 450 [31 860]	15 330 [33 800]	17 320 [38 190]	17 760 [39 160]
		Front axle load	7 090 [15 630]	6 950 [15 320]	7 460 [16 450]	7 940 [17 510]
		Rear axle load	7 360 [16 230]	8 380 [18 480]	9 860 [21 740]	9 820 [21 650]

DIMENSIONS (APPROXIMATE)

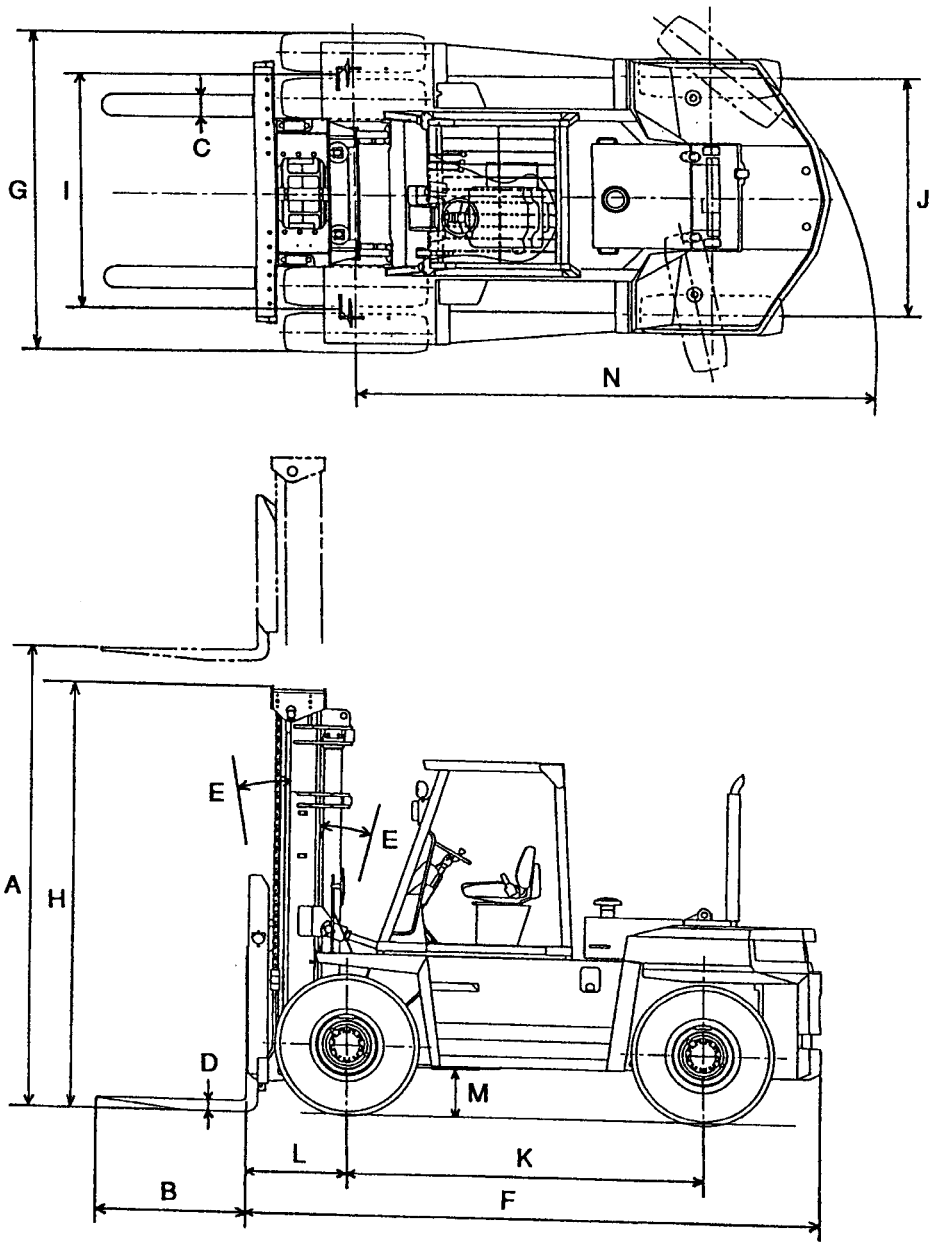

206177

Unit: mm [in.]

Ref. No.	Item \ Truck model	DP100	DP115	DP135	DP150
A	Lift	3 300 [130]			
B	Fork length	1 220 [48]			
C	Fork width	180 [7.1]			
D	Fork thickness	70 [2.8]		90 [3.5]	
E	Tilt angle (forward – backward)	15° – 12°			
F	Overall length	4 295 [169]	4 370 [172]	4 530 [178]	4 830 [190]
G	Overall width (outside of tires)	2 515 [99]		2 600 [102]	
H	Overall height (to top of mast lowered)	3 140 [124]		3 485 [137]	
I	Tread (front)	1 900 [75]		1 905 [75]	
J	Tread (rear)	1 930 [76]		1 890 [74]	
K	Wheelbase	2 800 [110]			3 100 [122]
L	Front overhang	753 [29.6]		792 [31.2]	794 [31.3]
M	Ground clearance (at frame)	220 [8.7]		260 [10.2]	
N	Minimum turning radius	4 000 [157]	4 060 [160]	4 160 [164]	4 550 [179]

COOLING SYSTEM

SPECIFICATIONS 1

DESCRIPTION 2

REMOVAL AND INSTALLATION

Radiator 3

TROUBLESHOOTING. 5

SPECIFICATIONS

Item \ Truck model	DP100	DP115	DP135	DP150
Type	Forced circulation			
Radiator, type	Corrugated fin with pressure cap (with built-in transmission oil cooler)			
Oil cooler, type	Plate fin			
Capacity, complete system, liter [U.S. gal.]	23 [6]			

DESCRIPTION

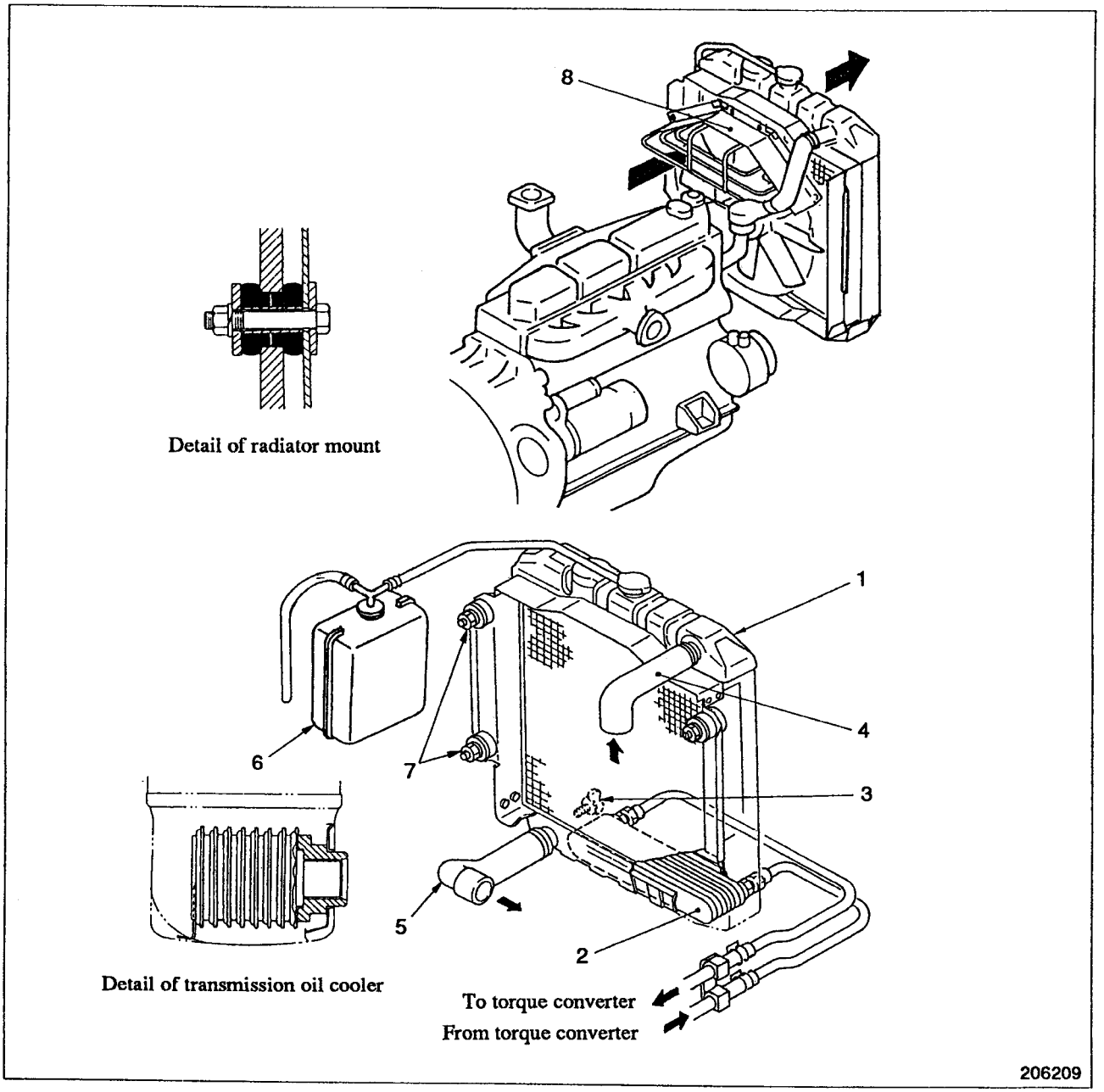

1 Radiator
2 Transmission oil cooler
3 Drain cock
4 Radiator hose (upper)
5 Radiator hose (lower)
6 Reserve tank
7 Radiator guard
8 Fan guard

The radiator with a tube-and-fin type core comes standard. The fins are corrugated. The cooling fan is of pusher type and has eight blades to provide high cooling efficiency. The lower tank has a built-in transmission oil cooler which, in operation, is constantly removing heat from the transmission oil returning from the torque converter.

REMOVAL AND INSTALLATION

Radiator

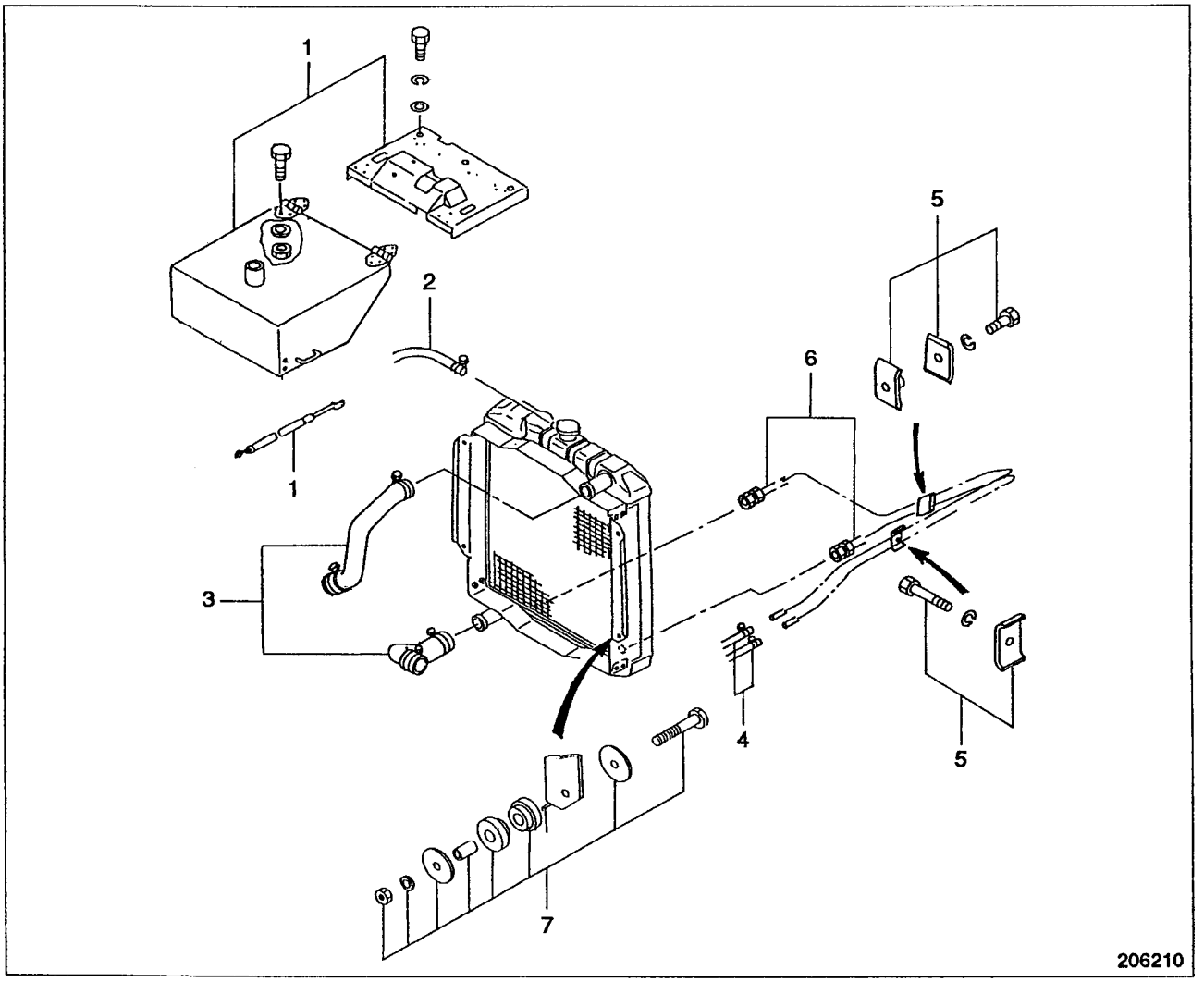

Removal sequence

1 Gas-filled cylinder, engine hood and radiator cover
2 Reserve tank hose
3 Radiator hoses (upper and lower)
4 Transmission oil cooler hoses
5 Clamp
6 Transmission oil cooler pipes
7 Radiator mount [Grommet, collar, washers, bolt and nut]

Start by:

a) remove the gas-filled cylinder and engine hood

b) remove the radiator cover

c) loosen the radiator drain cock to drain coolant from the radiator

Suggestions for removal

(1) Fasten a hoist to the radiator and sling the radiator.

Weight of radiator	30 kg [66 lb]

(2) Remove the radiator mounts (at 4 places) and lift off the radiator.

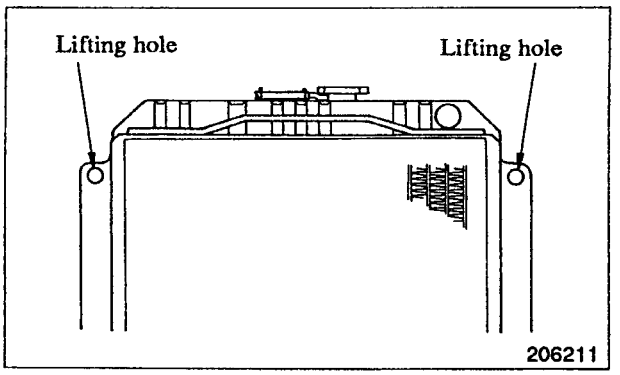

Inspection

(1) Blow dirt and bugs, if any, from the radiator fins with compressed air. Be careful not to bend the fins because this will decrease cooling efficiency.

(2) Replace the radiator if the fins are damaged beyond repair.

(3) Check the rubber cushions of the radiator mounts for condition. Replace them if damaged or deteriorated.

(4) Check the radiator hoses, upper and lower, for condition. Replace them if defective.

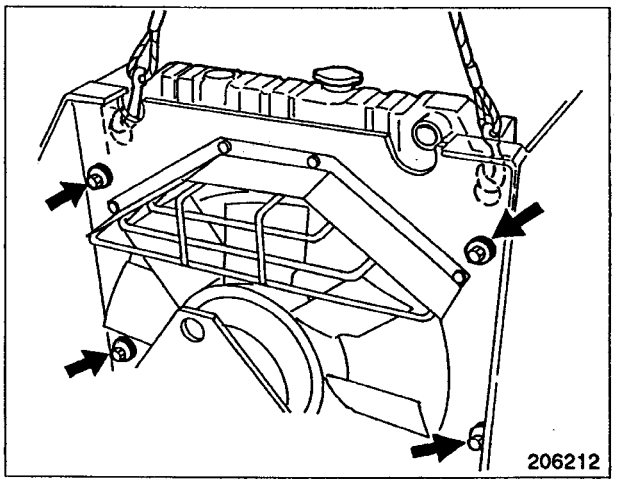

Installation

To install, follow the reverse of removal sequence.

(1) Slide the hoses on to the tubes of the radiator and tighten all the clamps. Make sure the hoses are properly clamped at flared portions of the tube.

(2) Fill the cooling system with coolant to the correct level. Start the engine and, with the engine running at low idle, listen for any abnormal noise. Check to be sure the coolant level in the reserve tank is correct.

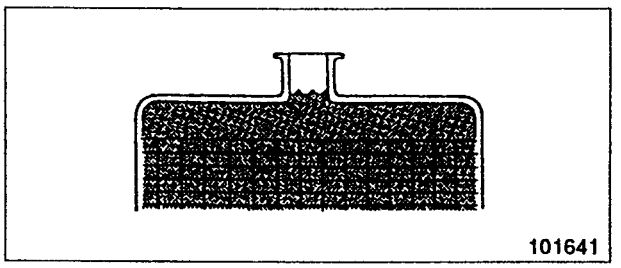

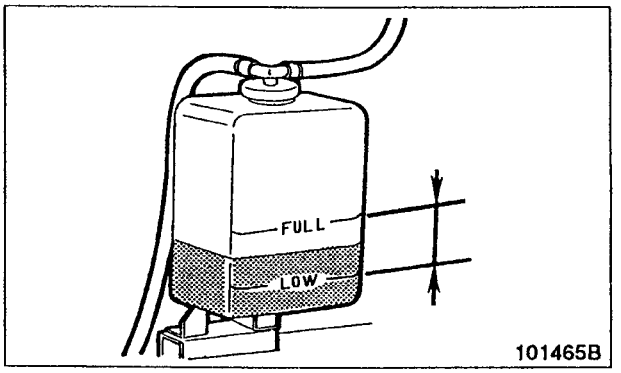

TROUBLESHOOTING

Problem	Cause	Correction
Coolant leaks from radiator	a) Radiator corroded b) Hose clamps loose c) Upper or lower hose deteriorated due to aging d) Drain cock defective e) Cracks in coolant passage in engine	Repair or replace. Retighten or replace. Replace. Replace. Check and repair.
Cooling system overheats	a) Debris in radiator fin b) Radiator fins distorted c) Water pump belt loose d) Thermostat defective	Clean. Repair or replace. Readjust. Check for elongation or cracks due to aging and replace if necessary. Repair or replace.
Oil leaks from oil cooler hose	a) Upper or lower hose deteriorated due to aging b) Hose clamps loose c) Oil cooler corroded	Replace. Retighten or replace. Repair or replace.

ELECTRICAL SYSTEM

SPECIFICATIONS 1

LOCATION OF COMPONENTS 2

DESCRIPTION

- Console Box 7
- Side Instrument Panels 9
- Fuses 10
- Major Components 11
- Light Bulb Specifications 13

DISASSEMBLY AND ASSEMBLY

- Console Box 14
- Combination Meter 15
- Side Instrument Panel 16

BATTERY MAINTENANCE 18

TROUBLESHOOTING 20

SCHEMATIC 23

SPECIFICATIONS

Item \ Truck model		DP100	DP115	DP135	DP150
Battery	Model nomenclature — No. of batteries	95E41R — 2			
	Voltage, V	12			
	Capacity, AH	80			
Direction lever		Electric			
Console box		With central vehicle monitoring system			
Automatic transmission controller		Electronic control unit (ECU)			
Starter switch		Anti-restart type			
Lights		See Light Bulb Specifications.			

LOCATION OF COMPONENTS

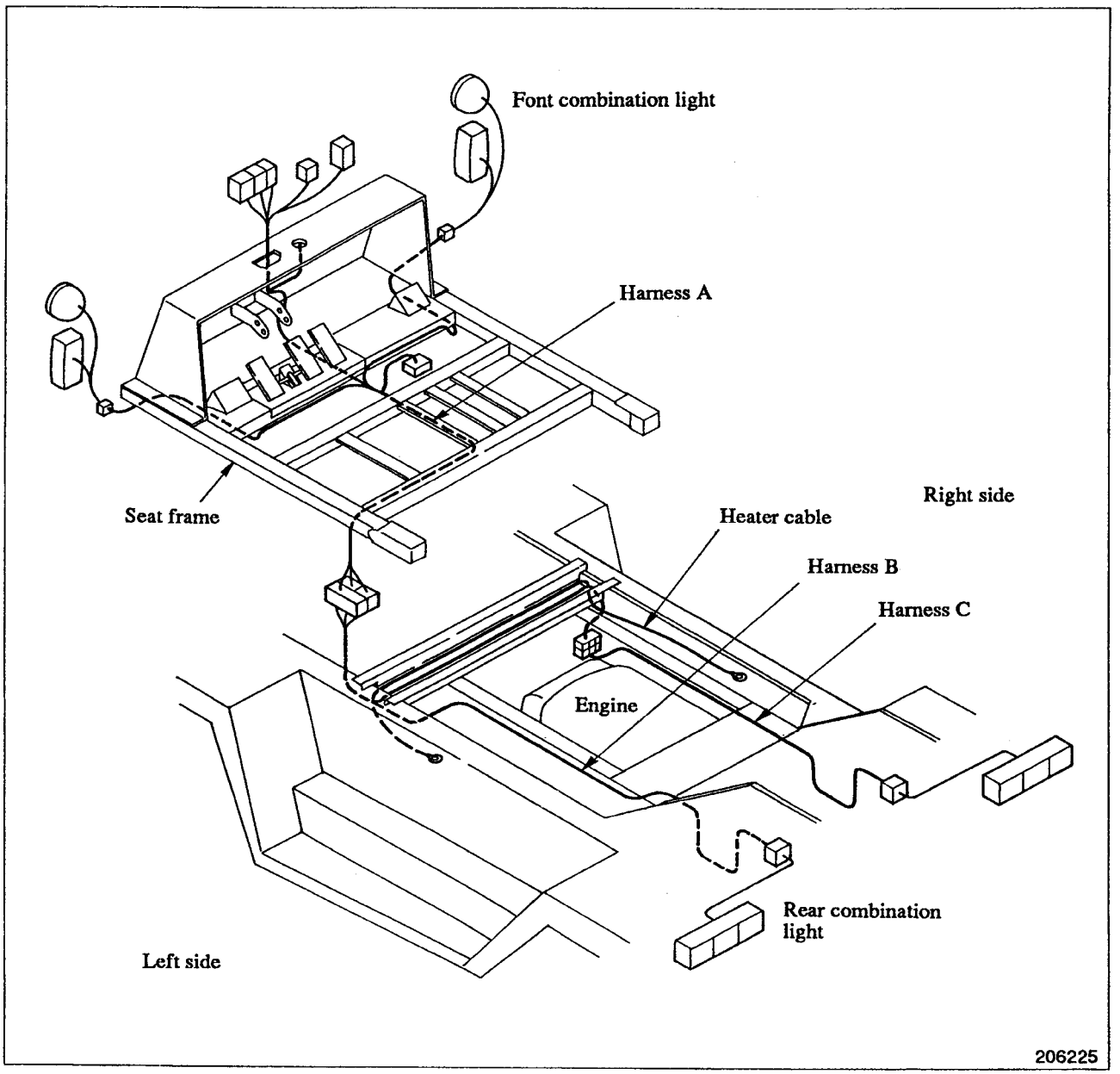

For the components to which harnesses A, B and C are connected, see the pages which follow.

⚠ CAUTION

Clamp the harnesses away from moving parts or sharp edges. Repair a frayed harnesses with vinyl tape.

Harness A

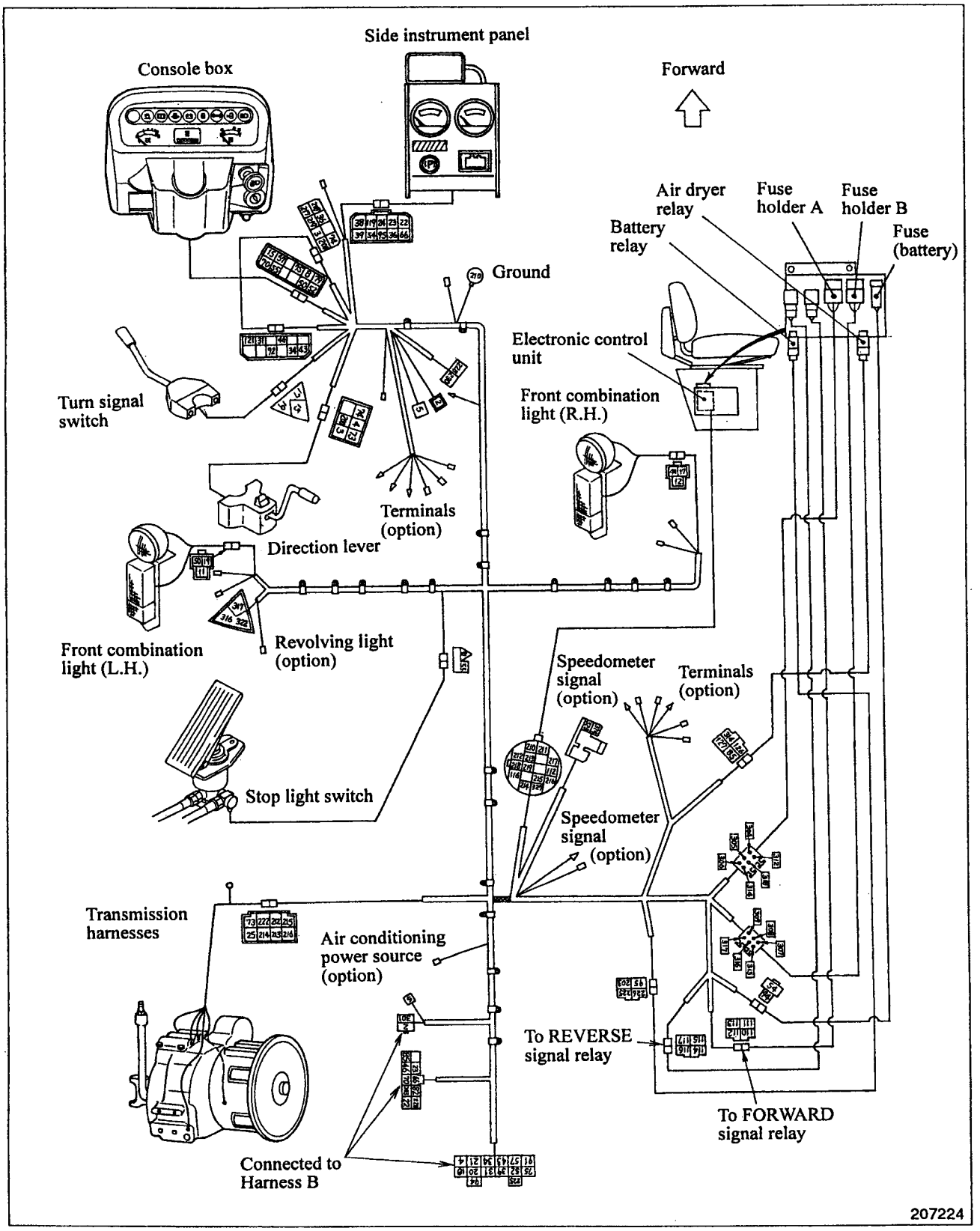
Side instrument panel
Console box
Forward
Air dryer relay
Fuse holder A
Fuse holder B
Battery relay
Fuse (battery)
Ground
Electronic control unit
Front combination light (R.H.)
Turn signal switch
Terminals (option)
Direction lever
Front combination light (L.H.)
Revolving light (option)
Speedometer signal (option)
Terminals (option)
Stop light switch
Speedometer signal (option)
Transmission harnesses
Air conditioning power source (option)
To REVERSE signal relay
To FORWARD signal relay
Connected to Harness B
207224

Product: Caterpillar DP100,DP115,DP135,DP150 Chassis & Mast Forklifts Service Reapir Workshop Manual
Full Download: https://www.arepairmanual.com/downloads/caterpillar-dp100dp115dp135dp150-chassis-mast-forklifts-service-reapir-workshop-manual/

Circuit numbers and color codes of harness A

No.	Wire size	Color	No.	Wire size	Color	No.	Wire size	Color
2	8	Black	72	1.25	Black	221	1.25	Green/red
3	1.25	Black/red	73	1.25	Green/yellow	222	1.25	Green/blue
4	1.25	Black/white	74	1.25	Green/blue	223	1.25	Green/red
5	5	Black/white	75	1.25	Green/blue	224	1.25	Green/yellow
8	1.25	Red	79	1.25	Red/black	225	1.25	Green/red
11	1.25	Red	82	1.25	Red/blue	226	1.25	Black
12	1.25	Red	85	1.25	Red	228	1.25	Blue/red
13	1.25	Red/white	91	1.25	Green	230	1.25	Blue/white
14	1.25	Red/white	94	2	Black/yellow	301	8	Black/white
15	1.25	Green/red	95	1.25	Black/red	304	2	Black/white
17	1.25	Green/yellow	110	1.25	Green/yellow	305	2	Black/yellow
18	1.25	Green/yellow	111	1.25	Black	306	2	Black/red
19	1.25	Green/blue	112	1.25	Red/blue	307	2	White/red
20	1.25	Green/blue	113	1.25	Black	308	2	White/black
21	1.25	Green/black	114	1.25	Green/blue	309	1.25	White/blue
22	2	Black	115	1.25	Black	312	2	Black/white
23	1.25	Yellow	116	1.25	Blue/white	313	2	Black/yellow
24	1.25	Blue	117	1.25	Black	314	1.25	Black/red
25	1.25	Yellow/red	119	1.25	Green/red	315	2	White/red
31	1.25	Yellow/white	121	1.25	Green/red	316	2	Blue
34	1.25	Yellow/green	126	1.25	Blue	317	2	Blue/white
36	1.25	Black/white	127	1.25	Black	320	2	Red/white
38	1.25	Blue	200	1.25	Blue	322	2	Blue/white
39	1.25	Green/blue	203	1.25	Green/white	323	1.25	Black/yellow
43	1.25	Yellow/white	210	1.25	Red/white	324	1.25	Black
46	1.25	Yellow/black	211	1.25	Black	327	1.25	White
49	1.25	Green/red	212	1.25	Red/yellow	328	1.25	Black
50	1.25	Green/red	213	1.25	Red/black	332	1.25	Yellow/red
52	1.25	Green/red	214	1.25	Black	334	1.25	Yellow/green
54	1.25	Green/white	215	1.25	Red/green	335	1.25	Red/yellow
55	1.25	Red	216	1.25	Black/red	336	1.25	White/red
57	1.25	Red/white	217	1.25	Black/white	338	1.25	Red/yellow
65	2	Black	218	1.25	White/red	339	1.25	Black
66	1.25	Green	219	1.25	White/black			
70	1.25	Black/yellow	220	1.25	Green/blue			

Sample of manual. Download All 458 pages at:
https://www.arepairmanual.com/downloads/caterpillar-dp100dp115dp135dp150-chassis-mast-forklifts-service-reapir-workshop-m