Product: 1998 Caterpillar 950G and 962G Wheel Loader Electrical System Schematic Workshop Manual

Connector Location [1]

Connector Number	Schematic Location	Machine Location
CONN 1	B-15	43
CONN 2	C-15	54
CONN 3	C-15	2
CONN 4	D-14	44
CONN 5	A-13	5
CONN 6 Monitor Harness Code Plug	H-9,13	C
CONN 7	F-12	45
CONN 8	E-12	45
CONN 9	D-12	45
CONN 10	C-12	45
CONN 11	C-11	C
CONN 12 HVAC Unit	G-10	56
CONN 13 Service Tool Conn.	F-1 0	C
CONN 14	C-14	54
CONN 15 Service Mode Plug	H-9	C
CONN 16	E-8	57
CONN 17	E-8	57
CONN 18	D-8	57
CONN 19	D-8	57
CONN 20 Option Code Plug	I-7	C
CONN 21	F-6	A
CONN 22 Xmsn Shifter	G-4	A
CONN 23 Customer Data Conn	C-4	C
CONN 24	B-4	D
CONN 25	A-3	46
CONN 26 Service Brake Pedal	B-3	45
CONN 27	C-3	58
CONN 28	E-3	A
CONN 29	E-3	A
CONN 30	G-2	47
CONN 31	F-2	60
CONN 32	F-2	60
CONN 33	C-2	48
CONN 34	G-1	49
CONN 35	G-1	49
CONN 36	I-1	50

[1] The connectors shown in this chart are for harness to harness connectors. Connectors that join a harness to a component are generally located at or near the component. See the Component Location Chart.

Related Electrical Service Manuals

Title	Form No.
Alternator: 107-7977	SENR4757
Caterpillar Monitoring System	SENR1394
Electric Starting Motor: 106-8558 Consist: 106-8557 Contact: 106-8559	SENR3559 SENR3581
Payload Control System	SENR6614
Power Train ECM	SENR1380
950G and 962G Wheel Loader Hvd. System System Operation Testing And Adjustion	SENR1389 SENR1390

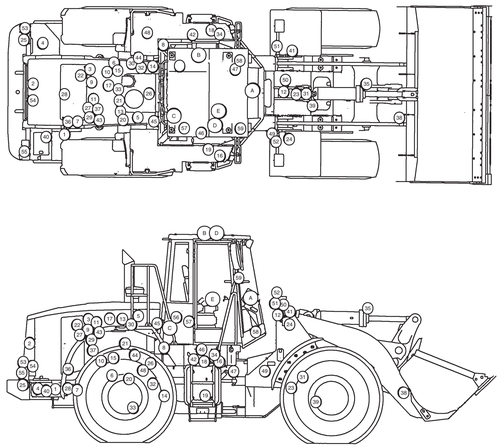

Machine Harness Connector And Component Locations

[4555]

Monitoring System Mode

Mode Of Operation	Mode Number
Normal	0
Harness Code	1
Parameter Display	2
Service	3
Tattletale	4
Units	5
Calibration	6,7,8

Machine Codes

Sales Model	Machine Code
950G	7,13, 15, 38
962G	14

Payload Control Fault Codes

Code	Fault
16800	Battery Voltage Too High
16801	Battery Voltage Too low
25413	PCS Not Calibrated
35001	Position Sensor Out of Range
35002	Loss of Position Sensor Signal
36401	Pressure Sensor Out of Range
36402	Loss of Pressure Sensor Signal
76901	Pressure Sensor Out of Range
76902	Loss of Pressure Sensor Signal
81704	Backup Battery Error
81708	Real Time Clock Not Running
82002	Loss Of Keypad Data Link

Component Location

Component	Schematic Location	Part No.	Machine Location
Actuator - Blend Door	H-11	106-5611	56
Actuator - Hood Au	A-14	124-4236	1
Actuator - Water Valve	H-11	106-5610	56
Alarm - Action	D-10	3E-6328	C
Alarm - Backup	C-15	103-8445	2
Alternator	D-15	107-7977	3
Anti Supersaver	F-10	106-8754	C
Batteries	F-10	115-2422	4
Breaker - Alt	A-15	9S-4893	5
Breaker - Hvac	A-15	9H-1958	5
Breaker - Main	A-15	9S-4893	5
Breaker - Running Lamp	A-15	3T-5862	5
Breakers - 15A	D- 1	6T-5943	C
Control - Cat Monitoring System	E-5	105-1316	A
Control - Implement	I-7	142-3371	C
Control - Power Train ECM	I-10	142-3363	57
Control - Water Valve/Blend Door	G-11	106-8010	A
Control - MLPCS ECM	C-4	112-1372	59
Converter - Voltage	H-5	119-1733	B
Dimmer - Control	E-11	153-5326	C
Fuses	A-14	3K-6782	5
Fuses - 10A	D-11	3K-6782	C
Fuses - 15A	D-11	8M-8948	C
Gauge - Coolt	E-4	100-5895	A
Ground - Cab	A-8		D
Ground - Cab	F-10		57
Ground - Cab	H-8		57
Ground - Cab	H-10		57
Ground - Left Frame Bias	E-14		6
Ground - Right Rear Frame	A-15		7
Ground - Steer Column	E-5		A
Ground - Strap Frame to Cab	G-12	8X-5964	8
Ground - To Engine	D-13		9
Ground - To Engine Block	D-14		10
Ground - To Engine Cyl Head	D-14		11
Heater - Air Inlet	D-14	107-9852	11
Horn - Forward	F-3	4Y-7892	12
Horn - Forward	H-1	7T-0970	12
Horn - Forward	I-1	7T-0970	12
Horns - Forward	F-2	7T-0970	12
Keypad - WLPCS	B-4	129-0419	59
Motor - Actuator	A-14	117-1557	1
Motor - Blower	G-11	3E-6392	56
Motor - Front Wiper	D-5	147-7473	A
Motor - Priming Pump	B-14	151-6351	13
Motor - Rear Wiper	F-10	107-8709	C
Motor - Sec Steer	B-2	154-2563	19
Motor - Starter	D-14	106-8958	15
Motors - Washers	A-3	7T-8890	16
Relay - AH Magnetic Switch	B-14	3E-0575	17
Relay - Backup Lamp	I-15	4Y-6131	25
Relay - Front Flood	E-10	3E-5239	C
Relay - Hood Raise Lower	A-13	149-2918	5
Relay - Main	B-15	101-7740	5
Relay - Rear Flood	E-11	3E-5239	C
Relay - Sec Steer	B-2	139-2599	14
Relay - Sec Steering Intermediate	F-11	3E-5239	C
Relay - Start Magnetic Switch	B-14	125-1902	5
Resistor - Blower	G-11	9G-1950	56
Sender - Fuel Level	H-2	152-7248	18
Sender - Hyd Temp	A-3	4W-9972	19
Sender - Torque Converter Oil Temp	B-14	4W-9972	20
Sensor - Coolant Temp	D-15	131-0427	22
Sensor - Engine Speed	B-14	6V-2483	21
Sensor - Lift Cyl Head End Press	G-1	124-4672	23
Sensor - Lift Lever	F-2	106-4437	E
Sensor - Lift Linkage Rotary Position	I-1	121-5284	24
Sensor - Tilt Lever Pos	F-2	106-4437	E
Sensor - Torque Conv Output Speed	B-12	3E-8848	26
Sensor - Trans Intermediate Speed Sensor 1	B-12	3E-8848	26
Sensor - Trans Intermediate Speed Sensor 2	B-12	3E-8848	26
Sensor - Trans Output Speed Sensor 1	B-13	3E-8848	26
Sensor - Trans Output Speed Sensor 2	B-13	3E-8848	26
Sensor - Trans Oil Temp	B-13	150-3855	26
Sensors - Aux Lever Pos	F-9	106-4437	E
Solenoid - A/C Clutch	B-15	106-5122	27
Solenoid - Aux Lever Lower	H-1	138-2924	31
Solenoid - Aux Lever Pressure/t	G-1	138-2924	31
Solenoid - Axle Oil Cooler Clutch Assy	C-14	152-5409	28
Solenoid - Lift Linkage Lower	H-1	138-2924	31
Solenoid - Lift Linkage Raise	G-1	138-2924	31
Solenoid - Pilot Press Supply	G-1	129-4923	31
Solenoid - Shutdown	C-15	8C-3663	28
Solenoid - Start Aid	F-14	3E-6332	30
Solenoid - Tilt Linkage Tiltback	G-1	138-2924	31
Solenoid - Wt Linkage Dump	H-1	138-2924	31
Solenoid Valve - Dual HP	B-15	129-7707	27
Solenoid Valve - Ride Control	G-1	3E-8574	31
Solenoids - Clutch Modulating Valve	C-13	121-6296	26
Stud - Terminal	D-11	9G-8451	C
Suppressor - Arc	B-2	106-8754	32
Suppressor - Arc A/C	B-15	106-8754	27
Suppressors - Arc	E-6	106-8754	A
Switch - A/C Refrigerant	B-15	114-5333	27
Switch - AH	G-5	112-6168	A
Switch - Auto Ride Control	B-5	103-6333	D
Switch - Auto/Manual	B-6	123-6363	D
Switch - Axle Oil Cooler	C-14	155-8998	33
Switch - Beacon	B-5	6K-9609	D
Switch - Blower	B-9	3E-7156	D
Switch - Brake Oil Pressure	H-2	3E-7693	34
Switch - Bucket Positioner	I-1	111-1324	35
Switch - Bucket/Fork Select	G-7	135-9968	B
Switch - Dimmer	B-2	2H-5966	38
Switch - Disconnect	B-15	7N-0718	36
Switch - Downshift	G-5	152-5707	A
Switch - Engine Oil	C-15	3E-6493	37
Switch - Fore/Neu/Rev	G-5	152-5707	A
Switch - Forward Horn	G-4	21-5960	A
Switch - Front Axle Temp	F-1	155-8998	39
Switch - Front Wiper	B-4	110-7686	D
Switch - Function Select	F-9	116-4509	E
Switch - Hazard lamp	G-9	112-6167	B
Switch - Hood Actuator	A-14	146-5204	42
Switch - Hyd Filter Bypass	A-3	7X-8949	16
Switch - Hyd Oil Level	A-2	123-2993	13
Switch - Implement Lockout	F-8	116-4509	E
Switch - Key Start	D-3	9G-7941	A
Switch - Kickout On/Off	G-8	116-4509	B
Switch - Park Brake Oil Pressure	H-2	3E-6452	42
Switch - Primary Steer	B-2	3E-6492	14
Switch - Rear Axle Temp	C-14	155-8998	33
Switch - Rear Wiper	C-9	112-6174	D
Switch - Run/Work/Park/Tail	C-8	106-5325	D
Switch - Sec Steer Test	H-8	143-3001	B
Switch - Secondary Steer	B-2	3E-6493	14
Switch - Selector AC/Heat	B-9	3E-7156	D
Switch - Service Brake Pedal Au	B-3	113-8524	38
Switch - Start Aid	G-5	3E-7176	A
Switch - Start Aid Coolant	D-15	3E-6446	22
Switch - Tach/Speedo/Serv Meter	G-3	112-6173	A
Switch - Temp Selector	B-9	127-6540	D
Switch - Thermostat	D-11	3E-5464	21
Switch - Train Neutralizer Override	B-5	112-6158	D
Switch - Turn Signal	F-8	124-5565	A
Switch - Uplift	G-5	152-5709	A
Tach/Speedometer	E-4	100-5988	A
Terminal Block	A-14	121-1523	5

Wire Description Chart

Wire Number	Wire Color	Description
Power Circuits		
101	RD	Bat (+) (Not Application Specific)
102	RD	HdLmp
105	RD	Key Start Sw
108	BU	Aux Ckt
109	RD	Alt Output (+) Term.
112	PU	Main Power Rly Output
113	OR	Opr Mon Panel VMIS B+ Switched
114	GN	Warning Horn (Forward)
118	GY	Aux Ckt
120	YL	Aux Ckt
122	BU	Aux Ckt
123	WH	Aux Ckt
124	GN	A/C
126	PK	Xmsn Ctrl
127	OR	Aux Ckt
128	PK	Aux Ckt
129	BU	Aux Ckt
130	RD	Aux Ckt
133	OR	Aux Ckt
134	YL	Aux Ckt
135	BU	Aux Ckt
136	GN	Sec Ster
138	GN	Auto Lube Pump To Payload Mon
144	GN	Aux Ckt
146	GY	Aux Ckt
158	BR	Aux Ckt
167	OR	Aux Ckt
175	PK	Aux Ckt
177	OR	Main Brkr
188	WH	Aux Ckt
Ground Circuits		
200	BK	Main Chassis
201	BK	Operator Monitor Return
202	BK	XMSN Ctrl
250	BK	Payload Mon - Customer Gnd
251	BK	Payload Mon - System Gnd
270	BK	CMS Ident Code 0
271	BK	CMS Ident Code 1
272	BK	CMS Ident Code 2
273	BK	CMS Ident Code 3
274	BK	CMS Ident Code 4
275	BK	CMS Ident Code 5
290	BK	CMS Service
291	BK	CMS Clear
A200	BK	WTL Impl Ctrl Gnd
A201	BK	WTL Impl Ctrl Serv Mode SW to GND
A202	BK	WTL Impl Ctrl Clear Fault SW to GND
A203	BK	WTL Impl Ctrl ID Code 3
A204	BK	WTL Impl Ctrl ID Code 4
A205	BK	WTL Impl Ctrl ID Code 5
A219	BK	ETAC Ctrl Gnd
A251	BK	VMIS Serv Mode #1
A272	BK	MAC-14 Impl Ctrl B
A273	BK	MAC-1 4 Trans Ctrl B-
Basic Machine Circuits		
301	BU	Starter No. 1 Sol
304	WH	Starter Relay No. 1 Output
306	GN	Starter Relay Coil To Neut Start SW Or Key Start SW
307	OR	Key Start SW To Neutral Start SW Or VMIS Sensor Module
308	YL	Main Power Relay Coil
309	PU	Main Power Relay Coil Sol
311	WH	Start Aid Sol To Temp-SW
321	BR	Backup Alarm Lamp Travel Alarm
322	GY	Warning Horn (Forward)
326	PU	Key Start SW "O" Term.
334	BU	Start Aid Sol #2
373	GN	Start Aid Switch To Timer
397	OR	Hood Raise Motor
398	BU	Hood Raise Motor
A300	GN	Hood Raise Relay Coil
A301	WH	Hood Raise Relay Coil
Monitoring Circuits		
403	GN	Alternator (R) Term.
405	GY	Opr Mon Oil Press. (Low Setting)
410	WH	Opr Mon Action Alarm
411	PK	Opr Mon Master
416	BU	Opr Mon Alt
417	GY	Primary Steer SW
419	YL	Opr Mon Parking Brake
432	PK	Opr Mon Brake Press. (Oil)
441	OR	Eng Coolant Temp Gauge
442	GY	Hyd System Temp Gauge
443	YL	Power Train Temp Gauge
447	PK	Fuel Level Gauge
450	YL	Tach Sender (+)
453	PK	Sec Ster Action Lamp
484	YL	Primary Ster Lamp
496	WH	Opr Mon Panel Hyd Oil Level
499	GY	Opr Mon Implement Oil Filter
C413	YL	VMIS Display Data
C414	BU	VMIS Display Load
G451	PK	Opr Mon Pump Oil Sensor
G454	PK	Pump Drive Oil Temp
G485	BU	Opr Mon Front Brake Temperature
G486	GN	Opr Mon Rear Brake Temperature
Accessory Circuits		
500	BR	Wiper - Front (Park)
501	GN	Wiper - Front (Low)
502	OR	Wiper - Front (Hi)
503	BR	Wiper - Rear (Park)
504	YL	Wiper - Rear (Low)
505	BU	Wiper - Rear (Hi)
506	PU	Washer - Front
507	WH	Washer - Rear
508	PU	Radio Speaker - Left
509	WH	Radio Speaker - Left (Common)
510	GN	Radio Speaker - Right
511	BR	Radio Speaker - Right (Common)
512	OR	A/C Compressor/Refrigerant Pressure SW
515	GY	Blower Motor (Hi)
516	GN	Blower Motor (Medium)
517	BU	Blower Motor (Low)
518	OR	Hazard Flasher To SW
521	YL	A/C SW To Refrigerant SW
522	WH	A/C Clutch To Thermostat SW
537	GN	Turn Signal SW To Flasher
538	BR	Hazard Indicator
539	BU	Turn Signal Indicator Basic/Right
540	WH	Turn Signal Indicator Left
A513	PK	DC/DC Converter Memory Output
A523	PU	Temp Potentiometer Pos 1
A524	BR	Temp Potentiometer Pos 2
A525	OR	Temp Potentiometer Pos 3
A526	PK	Electronic Water Valve Actuator
A527	BU	Electronic Water Valve Actuator
A528	BR	Electronic Water Valve Actuator
Accessory Circuits (Continued)		
A541	PU	Flasher To Indicator Lights
A592	BU	Blend Door Motor (A)
A593	OR	Blend Door Motor (B)
A594	WH	Blend Door Position Feedback (+)
A595	GN	Blend Door Position Feedback (Signal)
A596	YL	Blend Door Position Feedback (-)
C529	GY	Lift Press Sensor (WAS B413)
C530	BU	Lift Position Sensor (WAS B412)
Lighting Circuits		
603	PK	Rotary Beacon
604	OR	Stop Lamp
605	YL	Turn Lamp - Left
606	GY	Turn Lamp - Right
608	GN	Flood Lamp - Rear
610	BR	Flood Lamp Basic
611	PU	Head Lamp Hi
612	GY	Backup Lamp
614	PU	Park/Tail/Dash/Lamp
615	YL	Cab Flood Lamp/Rops
617	BR	Tail/Position Lamp - Left (Road Pkg)/ Width
619	GN	Head Lamp Lo
633	BU	Attach Lighting Ckt
646	OR	Light SW To Front Flood Relay
647	GN	Light SW To Rear Flood Relay
661	GN	Tachometer Lamp - Smart EMS
662	YL	Speedometer Lamp - Smart EMS
663	GY	Gauge Lamps - Smart EMS
691	GY	Warning Lights To Bkr
692	YL	Flasher Bkr To Flasher
Service Brake Circuit		
709	OR	Service Brake Pedal SW
720	PU	XMSN Brake SW
727	GN	Sec Ster Motor Relay
728	BU	Sec Ster Cont SW
751	GN	XMSN Shift Sol No. 1 Or 3
752	YL	XMSN Shift Sol No. 2
754	BU	XMSN Shift Sol No. 3 Or 1
755	OR	XMSN Shift Sol No. 4 Or 5
761	GY	Lift Kickout Sol SW
762	YL	Bucket Positioner Sol SW
795	YL	Dual Hp Sol
E701	PK	Auto Ride Cntl SW
E702	OR	Auto Ride Cntl SW
E707	GN	VMIS Display +5
E708	YL	VMIS Display Clock
E735	PU	Dash Switch To Serv Mtr/Odometer Select
F781	BR	Downshift SW (N.O.)
F783	GN	Upshift SW (N.O.)
F784	YL	Downshift SW (NC.)
F785	WH	Upshift SW (NO.)
F793	OR	Air Inlet Heater Relay
G728	YL	SW To SW (Generic)
G750	BU	XMSN Cont Fwd SW To Gnd
G755	GY	XMSN Cont Rev SW To Gnd
G760	WH	XMSN Cont Speed 2 SW To Gnd
G761	YL	XMSN Cont Speed 3 SW To Gnd
G762	BR	XMSN Cont Speed 4 SW To Gnd
G763	PU	XMSN Cont Neut SW To Gnd
G764	PK	XMSN Cont Pk Brk Lever SW To Gnd
G765	GN	Impl Cont SW To Gnd NO.
G766	OR	Impl Cont Lever Pos Sensor
G768	GN	XMSN Cont Speed 1 SW To Gnd
G785	OR	Injector Diode To Injector 14
H708	OR	Impl Coot Kickout SW 1
H709	BU	Impl Corn Kickout SW 2
H710	PK	Impl Cont Lift Lever Position
H711	GN	Impl Cont Tilt Lever Position
H713	PK	Impl Cont Lift Proportional Sol
H714	OR	Impl Cont Lower Proportional Sol
H715	PU	Impl Cont Lower Kickout Sol
H716	WH	Impl Cont Sol Return
H717	BR	Impl Cont Pilot Press Sol
H719	OR	Impl Cont Lift Kickout Sol
H720	BU	Impl Cont Bucket Positioner Sol
H728	GN	Auto SW 3
818	BR	Serial Data (Transmit)
819	BU	Serial Data (Receive)
900	PU	XMSN Shift Sol No. 5 or 4 4
901	WH	XMSN Shift Sol No. 6
910	YL	XMSN Neutzer Override Indicator
944	OR	Data Link + (CAT)
945	BR	Data Link - (CAT)
961	BR	Selector SW
964	BU	Fork Position Select
973	BR	CST Autoshift- Auto/Manual SW 2
975	WH	CST Autoshift- Sol Return
976	OR	Ride Cont Solenoid 1
977	YL	CST Autoshift- Auto/Manual SW 1
E900	WH	ECPC Trans Output SPD +
E901	GN	ECPC Trans Output SPD
E902	PU	ECPC Trans Intermediate SPD +
E903	BU	ECPC Trans Intermediate SPD -
E904	BR	ECPC Trans Intermediate SPD Q+
E905	BU	ECPC Trans Intermediate SPD Q-
E906	OR	ECPC Trans Output SPD Q+
E907	GY	ECPC Trans Output SPD Q-
E908	BR	ECPC Trans Input SPD +
E909	WH	ECPC Trans Input SPD -
E917	WH	Impl Lockout SW to GND (N.O.)
E918	GN	Impl Lockout SW to GND (N.C.)
E919	YL	AUX Lower Proportional Sol
E920	BR	AUX Lift Proportional Sol
E922	GN	Dump Proportional Solenoid
E923	PK	ETAC Front Left Wheel Proportional Solenoid
E924	YL	ETAC Front Right Wheel Proportional Solenoid
E925	OR	ETAC Rear Left Wheel Proportional Solenoid
E926	BU	ETAC Rear Right Wheel Proportional Solenoid
E928	WH	ETAC Test Mode SW (NO)
E930	BU	ETAC Front Axle Pilot Solenoid
E932	PK	ETAC Front Left Wheel Speed Sensor
E933	YL	ETAC Front Right Wheel Speed Sensor
E936	WH	ETAC Solenoid Return
E955	OR	WLPMS PHII Keypad Data
G939	PK	MAC14 Switch Return
G940	PU	Impl 4th Func Lift Prop Sol
G941	GY	Impl 4th Func Lower Prop Sol
G942	OR	Impl 3rd Lever Pos Sensor
G943	BU	Impl Function Sel SW (NO.)
G944	YL	Impl Function Sel SW (N.C.)
G947	WH	Impl 4th Lever Pos Sensor
G954	GN	Dual Low Idle Sol
G955	BR	Dual Low Idle Sol
K977	PK	ECPC Trans Oil Temp Sensor
N939	GN	Ride Control Solenoid 2
P910	BR	Secondary Steering Test Sw Input

Off Machine Switch Specification

Part No.	Function	Actuate	Deactuate	Contact Position
3E-6449	Start Aid Coolant (Temperature)	38 ± 3°C (100 ± 5°F)	27°C MIN (80.6°F)	Normally Closed
3E-6450	Primary Steering Oil Pressure Secondary Steering Oil Pressure	1200 kPa MAX (175 psi MAX)	700 ± 100 kPa (100 ± 15 psi)	A-C, Normally Closed A-B, Normally Open
3E-6452	Park Brake Oil Pressure	8270 kPa MAX (1200 psi MAX)	6890 ± 345 kPa (1000 ± 50 psi)	A-C, Normally Closed A-B, Normally Open
3E-7693	Service Brake Oil Pressure	10700 kPa MAX (1550 psi MAX)	9660 ± 345 kPa (1300 ± 50 psi)	A-B, Normally Open A-C, Normally Closed
114-5333	Refrigerant Pressure (AC)	275 to 1750 kPa [1] (40 to 255 psi)	-	Normally Open [2]
123-2993	Hydraulic Oil Level	21.0 ± 3.0°C (69.8 ± 5.4°F)	13.0°C (55.4 °F)	Normally Closed
155-8998	Axle Oil Cooler Temperature	65 °C ± 3 (149.0 °F)	58 °C (136.4 °F) Min	Normally Closed
155-8999	Rear Axle Temperature Front Axle Temperature	125 °C ± 3 (257.0 °F)	117 °C Min (242.6 °F) Min	Normally Closed

[1] A hysteresis band exists with increasing pressure the closed condition can be maintained up to 2800 kpa (405 psi), with decreasing pressure the closed condition can be maintained down to 170 kPa (25psi).

[2] Contact position at the contacts of the harness connector.

Resistor, Sender and Solenoid Specifications

Part No.	Component	Resistance (Ohms)[1]
3E-6332	Solenoid Valve - Start Aid	6.0
3E-8574	Solenoid Valve - Ride Control	34.3 ± 1.7
3E-9366	Solenoid - Bucket Lift Lever Lower Detent	53.3 ± 2.7
4W-9972	Sender - Hydraulic Oil Temperature	54°C (130°F) - 560 to 716 110°C (230°F) -72 to 82
8C-3663	Solenoid - Engine Shutdown	1.85 ± 0.15 10.3 ± 1.03
9G-1950	Resistor - A/C, Heater Blower Motor	Overall 2.0 ± .1; Tap 1.0 ± .05
106-5122	Solenoid - A/C Clutch	17.6 ±0.6
121-4298	Solenoid - Clutch Modulating Valves	7.75 ± 1.0
129-7707	Solenoid - Dual HP	31.1 ± 2.4
152-5409	Solenoid - Axle Oil Cooler	9.4 ± 5

[1] At room temperature unless otherwise noted.

Machine locations are repeated for components located close together:
A = Operator Compartment - Dash Console
B = Operator Compartment - Left Overhead Console
C = Operator Compartment - Relay/Fuse Panel
D = Operator Compartment - Right Overhead Console
E = Operator Compartment - Right Console

CATERPILLAR®

RENR 2140
June 1998

Schematic

950G and 962G Wheel Loader Electrical System

2JS1-UP **5RS1-UP**
3BS1-UP **6NS1-UP**
4BS1-UP **8DS1-UP**
5AS1-UP **9BS1-UP**

Machines Equipped with Electro-Hydraulics (E/H) and Command Contol Steering (CCS)

©1998 Caterpillar
All Rights Reserved

Printed in U.S.A.

Normally open switch that will close with an increase of a specific condition (temp-press-etc.).

Normally open switch that is closed due to an applied condition, and will open again with a specific decrease in that condition.

Normally closed switch that will open with an increase of a specific condition.

Normally closed switch that is open due to an applied condition, and will close again with a specific decrease in that condition.

The circle indicates that the component has screw terminals and a wire can be disconnected from it.

No circle indicates that the wire cannot be disconnected from the component.

This indicates that the component has a wire connected to it that is connected to ground.

This indicates that the component does not have a wire connected to ground. It is grounded by being fastened to the machine.

Harness And Wire Electrical Schematic Symbols

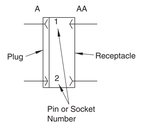

Typical representation of a Deutsch connector. The plug contains all sockets and the receptacle contains all pins.

Typical representation of a Sure-Seal connector. The plugand receptacle contain both pins and sockets.

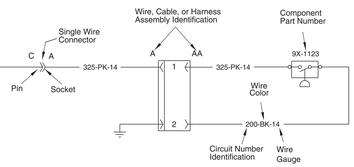

Electrical Schematic Symbols And Definitions

FUSE - A component in an electrical circuit that will open the circuit if too much current flows through it.

REED SWITCH - A switch whose contacts are controlled by a magnet. A magnet closes the contacts of a normally open reed switch; it opens the contacts of a normally closed reed switch.

SENDER - A component that is used with a temperature or pressure gauge. The sender measures the temperature or pressure. Its resistance changes to give an indication to the gauge of the temperature or pressure.

RELAY (Magnetic Switch) - A relay is an electrical component that is activated by electricity. It has a coil that makes an electromagnet when current flows through it. The electromagnet can open or close the switch part of the relay.

CIRCUIT BREAKER (C/B) - A component in an electrical circuit that will open the circuit if too much current flows through it. This does not destroy the circuit breaker and it can be reset to become part of the circuit again.

SOLENOID - A solenoid is an electrical component that is activated by electricity. It has a coil that makes an electromagnet when current flows through it. The electromagnet can open or close a valve or move a piece of metal that can do work.

MAGNETIC LATCH SOLENOID - A magnetic latch solenoid is an electrical component that is activated by electricity and held latch by a permanent magnet. It has two coils (latch and unlatch) that make electromagnet when current flows through them. It also has an internal switch that places the latch coil circuit open at the time the coil latches.

Component Identifiers (CID[1]) and Module Identifier (MID[2]) For Power Train ECM (MID No. 081)

CID	Component
0041	+8 Volts Sensor Supply
0070	Parking Brake Switch
0149	Ride Control Solenoid #2
0168	Electrical System Voltage
0177	Transmission Oil Temperature Sensor
0190	Engine Speed Sensor
0270	Cat Monitor System Harness Code
0363	Ride Control Solenoid
0367	Transmission Switch
0368	Transmission AUTO/MAN Switch
0444	Start Relay
0562	Unable To Communicate With Cat Monitor System
0582	Transmission Output Speed Sensor 1
0617	Air Heater Relay
0621	Downshift Switch
0622	Up Shift Switch
0623	Direction Switch
0631	Transmission Clutch #1 Solenoid
0632	Transmission Clutch #2 Solenoid
0633	Transmission Clutch Solenoid #3
0634	Transmission Clutch Solenoid #4
0635	Transmission Clutch Solenoid #5
0636	Transmission Clutch Solenoid #6
0668	Transmission Shift Lever
0672	Torque Converter Output Speed Sensor
0673	Transmission Output Speed Sensor
0674	Transmission Intermediate Speed Sensor 1
0675	Transmission Intermediate Speed Sensor 2
0688	Variable Horsepower Solenoid
0793	Primary Steering Pressure Switch
0794	Secondary Steering Pressure Switch
0795	Secondary Steering Intermediate Relay
0687	Option Code incorrect
0686	Harness Code incorrect

[1] The CID is a diagnostic code that indicates which component is faulty.
[2] The MID is a diagnostic code that indicates which electronic control module diagnosed the fault.

Component Identifiers (CID[1]) and Module Identifier (MID[2]) For Implement ECM (MID No. 082)

CID	Component
0168	Electrical System Voltage
0248	Data Link
0270	Caterpillar Monitoring System Harness Code
0296	Powertrain Electronic Control Module
0350	Rotary Position Sensor (Lift Linkage)
0352	Position Sensor (Lift Lever)
0353	Position Sensor (Tilt Lever)
0354	Solenoid Valve (Lift Linkage Raise)
0355	Solenoid Valve (Lift Linkage Lower)
0356	Solenoid Valve (Lift Linkage Dump)
0357	Solenoid Valve (Tilt Linkage Tiltback)
0358	Solenoid Valve (Pilot Pressure Supply)
0359