Product: 2005 TEREX TA40 OCDB-ZF Dump Truck Service Repair Workshop Manual
Full Download: https://www.arepairmanual.com/downloads/2005-terex-ta40-ocdb-zf-dump-truck-service-repair-workshop-manual/

CLICK HERE FOR TABLE OF CONTENTS

TEREX

TA40 OCDB-ZF Articulated Dumptruck Maintenance Manual

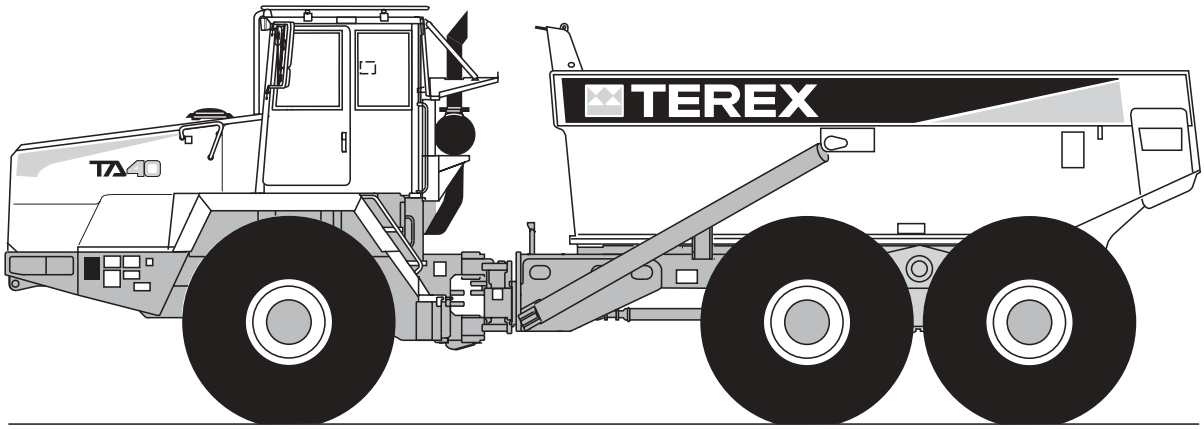

CLICK HERE TO RETURN TO MAIN LIBRARY INDEX

CUSTOMER SUPPORT DEPARTMENT
TEREX EQUIPMENT LIMITED
MOTHERWELL, SCOTLAND ML1 5RY

Part No. 15501184
REF. NO. SM842
SM 2145 Rev. 06/05

Sample of manual. Download All 476 pages at:
https://www.arepairmanual.com/downloads/2005-terex-ta40-ocdb-zf-dump-truck-service-repair-workshop-manual/

Product: 2005 TEREX TA40 OCDB-ZF Dump Truck Service Repair Workshop Manual
Full Download: https://www.arepairmanual.com/downloads/2005-terex-ta40-ocdb
-zf-dump-truck-service-repair-workshop-manual/

Sample of manual. Download All 476 pages at:
https://www.arepairmanual.com/downloads/2005-terex-ta40-ocdb-zf-dump-truck-service-repair-workshop-manual/

TEREX

The information contained within this Alert must not be made available to third parties not authorised to receive it.

Service Information Alert

DATE: April 1994 **B168**

MODEL: General

SUBJECT: VITON 'O' RINGS AND SEALS (FLUORO-ELASTOMERS) - SAFETY HAZARDS

PURPOSE:

To advise potentially hazardous condition.

DETAIL:

It has been brought to our attention that 'Viton' material used in manufacture of oil seals and 'O' rings, produces a highly corrosive acid (Hydrofluoric) when subjected to temperatures above 315° C.

The resulting contamination can have extreme consequences on human tissue since it is almost impossible to remove after contact.

We therefore recommend the following procedure when it is necessary to inspect any equipment that has been subjected to a high temperature i.e. fire.

a. Visually inspect for any gaskets or seals which have suffered from heat; they will appear black and sticky.

b. If this is affirmed - **Do Not Touch**

c. Make enquiries to ascertain the material composition. Any Fluoro-elastomer (Viton, Fluorel or Tecmoflon) should be considered dangerous but natural rubber and nitrile are non-hazardous.

d. If Fluoro-elastomer seals have been used, then the affected area MUST be decontaminated before undertaking further work.

e. Disposable Heavy Duty Gloves (Neoprene) MUST be worn and the affected area decontaminated by washing thoroughly with Limewater (Calcium Hydroxide solution).

f. Any cloths, residue and gloves used MUST be safely discarded after use.

Note: Burning of the discarded items is NOT RECOMMENDED, except in an approved incineration process where the gaseous products are treated by alkaline scrubbing.

TEREX SERVICE DEPARTMENT

TEREX Equipment Limited, Motherwell, Scotland ML1 5RY Tel. (0698) 732121 Tlx. 77141 Fax. (0698) 734046
TEREX Division, Tulsa, Oklahoma, 74107 USA Tel. (918) 446-5581 Fax. (918) 446-9752

TEREX

THIS PAGE IS INTENTIONALLY LEFT BLANK

IMPORTANT SAFETY NOTICE

Proper service and repair is important to the safe, reliable operation of all motor vehicles. The service procedures recommended and described in this publication, are effective methods for performing service operations. Some of these service operations require the use of tools specially designed for the purpose. The special tools should be used when, and as recommended.

It is important to note that this publication contains various WARNINGS and NOTES which should be carefully read in order to minimize the risk of personal injury to personnel, or the possibility that improper service methods will be followed which may damage the vehicle or render it unsafe. It is also important to understand these WARNINGS and NOTES are not exhaustive. It is not possible to know, evaluate and advise the service trade of ALL conceivable ways in which service might be carried out, or, of the possible hazardous consequences of each way. Consequently, no such broad evaluation has been undertaken. Accordingly, anyone who uses a service procedure, or tool, which is not recommended, must first satisfy themselves thoroughly that neither their safety, nor vehicle safety, will be jeopardized by the service method he/she selects.

Two types of heading are used in this manual to attract your attention.

1. ⚠ **WARNING** - This symbol is used when an operating procedure, practice, etc., which, if not correctly followed could result in personal injury or loss of life. Look for this symbol to point out important safety precautions. It means - **ATTENTION! BECOME ALERT! YOUR SAFETY IS INVOLVED!**

2. **Note -** This is used when an operating procedure, practice, etc., which, if not strictly observed, could result in damage to or destruction of equipment.

⚠ **WARNING**
Never use parts which are altered, modified, or weakened in operation. This can seriously jeopardize the integrity of the machine and could result in property damage or serious personal injury.

THIS PAGE IS INTENTIONALLY LEFT BLANK

TABLE OF CONTENTS

Section No.	Description		SM No.
000	**GENERAL INFORMATION**		
0000	Technical Data - TA40		2255 Rev 3
0010	Welding Procedure		2172
100	**CHASSIS**		
0010	Frames		1372 Rev 1
0020	Articulation and Oscillation Pivot		2273
0040	Hood and Mounting		2120
110	**ENGINE**		
0030	Engine and Mounting		2121 Rev 1
0050	Air Cleaner		2122 Rev 1
120	**TRANSMISSION**		
0010	Transmission and Mounting		2124 Rev 3
130	**DRIVELINES**		
0010	Front Drivelines		1378 Rev 2
0020	Rear Drivelines		1379 Rev 2
140	**FRONT AXLE GROUP**		
0020	Axle Group (Hub)	(Refer to Section 160-0030)	-
0040	Wheel Rim and Tyre	(Refer to Section 160-0050)	-
0060	Differential Drive Head	(Refer to Section 160-0020)	-
150	**CENTRE AXLE**		
0020	Differential Drive Head		2249
160	**REAR AXLE GROUP**		
0020	Differential Drive Head		2248
0030	Axle Group (Hub)		2256
0050	Wheel Rim and Tyre		2247 Rev 1
165	**BRAKE ASSEMBLY**		
0015	Oil Cooled Disc Brakes		2257 Rev 1
170	**PARKING BRAKE**		
0010	Parking Brake and Mounting		2253
0030	Actuator		2166 Rev 1
180	**SUSPENSION SYSTEM**		
0020	Front Suspension		2119
0040	Rear Suspension	From A8421011 to A8421065	1384 Rev 2
0040	Rear Suspension	From A8421066	2340
190	**ELECTRICAL SYSTEM**		
0000	Circuit Diagrams (DDEC IV, 6WG 310 transmission)		2258
0270	Switches and Sensors		2259
200	**FUEL SYSTEM**		
0040	Fuel System		1398 Rev 2
0051	Electronic Foot Pedal		1399

TABLE OF CONTENTS

Section No.	Description	SM No.
210	**COOLING SYSTEM**	
0000	Cooling System (Series 60 Engine)	2260
0005	Cooling System Schematic	2261
0010	Cooling Fan and Motor	2116
0040	Radiator and Mounting	2118 rev 1
0045	Low Temperature Unloader Valve	2152
0050	Disc Brake Oil Cooler	2153
0060	Transmission Oil Cooler	1922 Rev 2
0100	Hydraulic Oil Cooler	1403 Rev 1
220	**STEERING SYSTEM**	
0000	Steering System Schematic	1390 Rev 2
0090	Steering Valve	1391
0100	Flow Amplifier Valve	1392 Rev 3
0120	Steering Cylinder	1393 Rev 1
0140	Emergency Valve	1395 Rev 1
230	**BODY SYSTEM**	
0000	Body System Schematic	1407 Rev 2
0040	Hydraulic Tank	1913 Rev 2
0050	Main Hydraulic Pump	1394 Rev 1
0060	Body Control Valve	1410 Rev 2
0081	Body Control Joystick	1411 Rev 2
0121	Pilot Supply Valve	1448 Rev 1
0130	Body Cylinder	1409 Rev 1
250	**BRAKING SYSTEM**	
0000	Braking System Schematic	2155 Rev 2
0025	Brake Coolant Tank	2270
0040	Triple Pump	2271
0045	Motor/Triple Pump Assembly	2272
0050	Brake Manifold Valve	2158
0060	Accumulator	2160
0065	Two Speed Control Valve	2159
0070	Treadle Valve	2165 Rev 2
0075	Priority Unloader Valve	2161
0090	Directional Control Valve	2254
0120	Relief Valve	2163
260	**OPERATORS COMPARTMENT**	
0010	Cab and Mounting	1404 Rev 2
0090	Driver Seat and Mounting	1981
0130	Air Conditioning	1405 Rev 2
270	**BODY**	
0010	Body and Mounting	1406 Rev 2
300	**MISCELLANEOUS**	
0020	Lubrication System	2129 Rev 4
0070	Service Tools	2277 Rev 1
0080	Standard Bolt and Nut Torque Specifications	1238
0090	Unit Storage	1239

* * * *

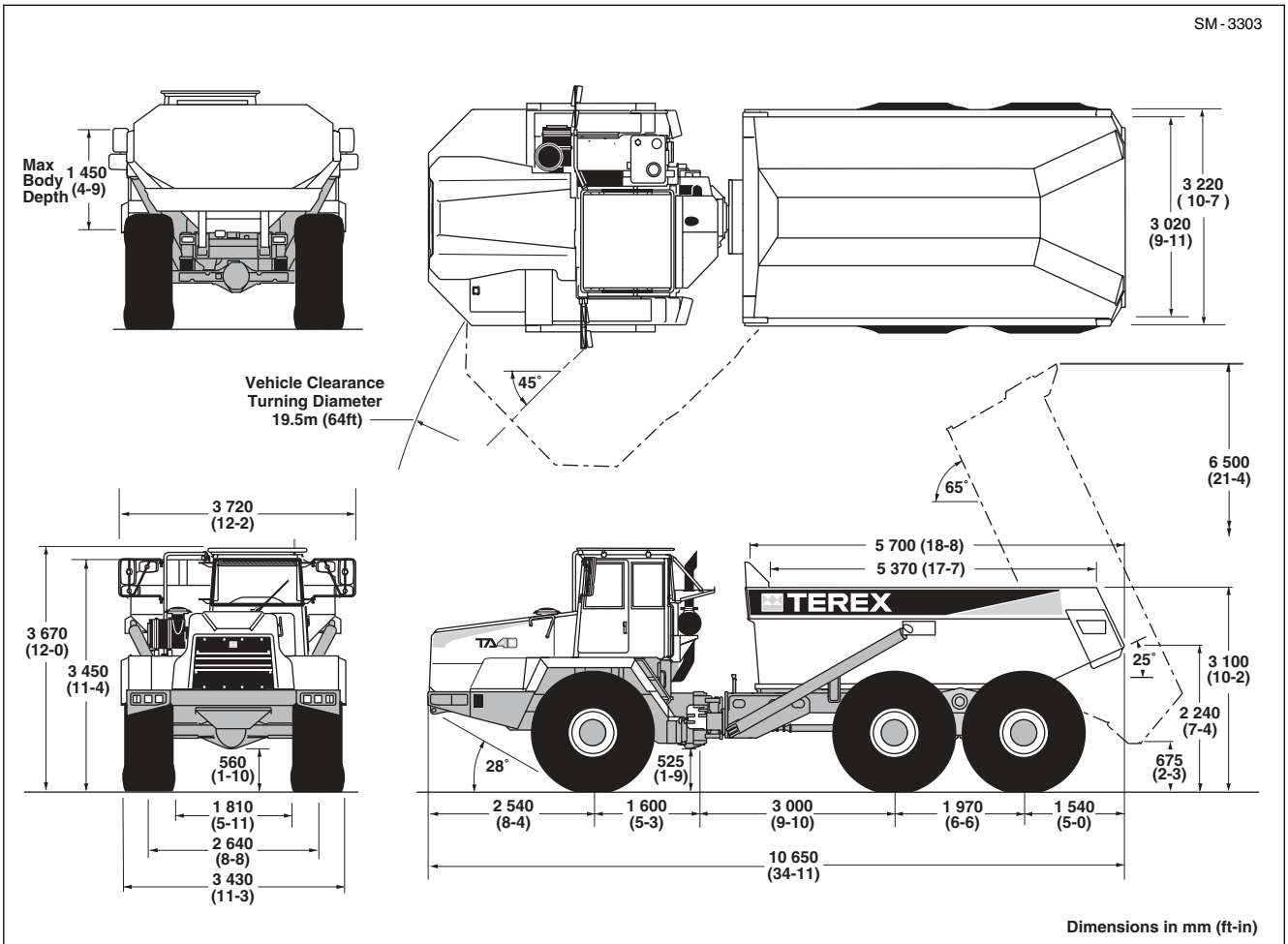

Fig. 1 - Machine Dimensions

ENGINE

Make/Model ..... Detroit Diesel Series 60
Type ..... Four cycle diesel, turbocharged with air-to-air charge cooling, water cooled. Electronic management.
Gross power at 2 200 rev/min ..... 332 kW (445 hp, 451 PS)
Net power at 2 200 rev/min ..... 291 kW (390 hp, 395 PS)

Note: Net power is after deductions for alternator. Engine emission meets Tier II USA EPA/CARB MOH 40 CFR 89 and EU NRMM (non-road mobile machinery) directive.

Maximum Torque ..... 2 000 Nm (1 475 lbf ft) at 1 350 rev/min
Number of cylinders/configuration ..... 6 cylinder, in line
Bore and Stroke ..... 130 x 160 mm (5.12 x 6.30 in)
Total Displacement ..... 12.7 litres (774 in³)
Air cleaner ..... Dry type, double element
Starting ..... Electric
Maximum Speed (No load) ..... 2 325 rev/min
Maximum Speed (Full load) ..... 2 200 rev/min
Idle Speed ..... 700 rev/min
Maximum Operating Slope ..... 30° (57% Grade)

TRANSMISSION

Make/Model ..... ZF 6WG 310 Automatic with manual override. The transmission consists of a torque converter close-coupled to a 6 speed gearbox with integral output transfer gearing. Automatic shifting throughout the range, with kickdown feature. Lockup in all forward gears. A torque-proportioning output differential transmits drive permanently to front and rear axles. This differential may be locked by the driver for use in difficult traction conditions. Integral hydraulic retarder.

Pressures:
- Main ..... 16 + 2 bar (232 + 30 lbf/in²)
- Lockup (Wk) ..... 14 +/- 1 bar (190 +/- 15 lbf/in²)
- Converter 'IN' ..... 7.6 bar (110 lbf/in²) at 2 300 rev/min
- Converter 'OUT' ..... 4.8 bar (70 lbf/in²) at 2 300 rev/min
- Converter Relief Valve ..... 8.5 bar (123 lbf/in²)
- Retarder ..... 6 bar (87 lbf/in²)

Temperatures:
- Normal ..... 80° - 110° C (176° - 230° F)
- Maximum ..... 120° C (248° F)

Stall Speed ..... 1 835 ± 50 rev/min

Ratios:
Torque Converter 1.84:1
Transmission ..... Refer to table below.

Forward						
Gear	1	2	3	4	5	6
km/h	6.2	9.5	14.9	23.2	34.0	51.7
mile/h	3.8	5.9	9.2	14.4	21.1	32.1
Reverse						
Gear	1	2	3			
km/h	6.2	14.9	34			
mile/h	3.8	9.2	21.1			

Note: During reversing operations it is recommended to reduce engine speed, use only 1st or 2nd gear and never exceed 10 km/h (6.2 mile/h).

AXLES

Three axles in permanent all-wheel drive with differential coupling between each axle to prevent driveline wind-up. Heavy duty axles with fully-floating axle shafts and outboard planetary gearing.

Automatic limited slip differentials in each axle. Leading rear axle incorporates a through-drive differential to transmit drive to the rearmost axle. Locking of this differential is actuated simultaneously with the transmission output differential lock.

Ratios:
Differential 3.70:1
Planetary 6.35:1
Total Reduction 23.51:1

SUSPENSION

Front: Axle located by a leading A-frame permitting both vertical movement and oscillation. Rubber cone suspension medium with heavy duty hydraulic dampers.

Axle Vertical Travel ..... 105 mm (4.2 in)

Rear: Each axle is coupled to the frame by three rubber-bushed links with lateral restraint by a transverse link. Pivoting inter-axle balance beams equalise load on each rear axle. Suspension movement is cushioned by rubber/metal laminated compression units between each axle and underside of balance beam ends. Pivot points on rear suspension linkages are rubber-bushed and maintenance-free.

Axle Vertical Travel ..... ± 115 mm (± 4.5 in)
Axle Oscillation ..... ± 9°

BRAKES

Full hydraulic braking system with enclosed, forced oil-cooled multiple discs on each wheel. Independent circuits for front and rear brake systems. Warning lights and audible alarm indicate low brake system pressure. Brake system conforms to ISO 3450, SAE J1473.

Actuating Pressure ..... 48 ± 2.4 bar (700 ± 35 lbf/in²)
Pump Type ..... Triple stage gear
Capacity at 2 200 rev/min ... 1.98 litre/s (31.4 US gal/min) combined

Braking surface (tractor) ..... 590240 mm² (914.9 in²)/brake
Braking surface (trailer) ..... 590240 mm² (914.9 in²)/brake

Parking: Spring-applied, hydraulic-released disc on rear driveline.

Emergency: Automatic application of driveline brake should pressure fall in main brake hydraulic system. Service brakes may also be applied using the parking-emergency brake control.

Retardation: Hydraulic retarder integral with transmission.

WHEELS AND TYRES

Wheels ..... Five-piece Earthmover rims with 23 Stud Fixing
Size:
Standard ..... 25 x 25.00 in for 29.5 R25** tyres
Tyres:
Standard ..... 29.5 R25** Radial

Inflation Pressures (Bridgestone):

	Front	Rear
29.5 R25**	3.5 bar (51 lbf/in²)	4.25 bar (62 lbf/in²)

Inflation Pressures (Continental):

	Front	Rear
29.5 R25**	3.5 bar (51 lbf/in²)	4.25 bar (62 lbf/in²)

Inflation Pressures (Michelin):

	Front	Rear
29.5 R25**	3.0 bar (44 lbf/in²)	3.65 bar (53 lbf/in²)

Note: Tyre pressures should be regarded as nominal only. It is recommended that for tyres both listed and unlisted, the user should consult the tyre manufacturer and evaluate all job conditions in order to make the proper selection.

HYDRAULIC SYSTEM

Steering and Body Hoist

The steering and body hydraulic systems are supplied with oil from a common tank by the main hydraulic gear pump. Pump is driven from power takeoff on transmission. The components are protected by advanced full flow filtration to 5 micron particle size on the return line.

Pump capacity (at 2258 rpm) ..... 7.03 litre/s (111 US gal/min)

Steering

Hydrostatic power steering by two double-acting, cushioned steering cylinders. Actuating pressure for steering operation is supplied by the main hydraulic gear pump.

Emergency steering pressure is provided by a ground driven pump mounted on the transmission. An indicator lamp signals should the emergency system activate. Conforms to SAE J53.

System pressure ..... 206 bar (3000 lbf/in²)
Steering Angle (left and right) ..... 45°
Lock to Lock Turns, steering wheel 4
Clearance Turning Diameter (SAE) ..... 19.5 m (64 ft)

Body

Two single-stage, double-acting hoist cylinders, cushioned at both ends of stroke. Electro servo assisted hoist control. Actuating pressure for body hoist is supplied by the main hydraulic gear pump.

System pressure ..... 172 bar (2500 lbf/in²)
Control Valve ..... Pilot Operated, Open Centre
Body Raise Time (loaded) ..... 16 sec
Body Lower Time (power down) ..... 12 sec

ELECTRICAL SYSTEM

Type ..... 24 volt, Negative Ground.
Battery ..... Two, 12 Volt, 175 Ah each, Maintenance Free
Accessories ..... 24 Volt
Alternator ..... 70 Amp

BODY

All welded construction, fabricated from high hardness (min. 360 BHN) 1 000 MPa (145 000 lbf/in²) yield strength steel. 25° tail chute angle provides good load retention without tailgate.

Plate Thicknesses:
Floor and Tailchute ..... 15.0 mm (0.59 in)
Sides ..... 12.0 mm (0.47 in)
Front ..... 10.0 mm (0.39 in)
Volume:
Struck (SAE) ..... 17.0 m³ (22.2 yd³)
Heaped 2:1 (SAE) ..... 22.0 m³ (28.8 yd³)

SERVICE CAPACITIES

Fuel tank ..... 463 litres (122 US gal)
Hydraulic System
(Steering, Braking & Body) ..... 209 litres (55 US gal)
Brake Cooling System ..... 175 litres (46.2 US gal)
Cooling System ..... 80 litres (21.1 US gal)
Engine Crankcase (with filters) ..... 37 litres (9.8 US gal)
Transmission (with filters) ..... 56 litres (14.8 US gal)
Differentials ..... 31 litres (8.2 US gal)
Planetaries ..... 9 litres (2.4 US gal)
Driveshaft Bearings ..... 1.5 litres (0.4 US gal)
Air Conditioning Compressor .... 0.125 litres (0.033 US gal)

VEHICLE WEIGHTS		
Standard Vehicle	kg	lb
Net Distribution		
Front Axle	15 275	33 675
Centre Axle	7 750	17 085
Rear Axle	7 705	16 985
Net Weight	**30 730**	**67 745**
Payload	**36 500**	**80 470**
Gross Distribution		
Front Axle	20 170	44 465
Centre Axle	23 530	51 875
Rear Axle	23 530	51 875
Gross Weight	**67 230**	**148 215**
Bare Chassis	24 670	54 390
Body	5 400	11 905
Body Hoists (pair)	660	1 455

Ground Pressures		
At 15% sinkage of unloaded radius and specified weights		
29,5 R25	**Net**	**Loaded**
Front	102 kPa (14.8 psi)	135 kPa (19.6 psi)
Rear	52 kPa (7.5 psi)	158 kPa (22.9 psi)

* * * *

Welding

WARNINGS
Before any welding is done on a machine equipped with any electronic systems, disconnect the following (if applicable) in this order: Battery earth cable, battery supply cable, alternator earth cables, alternator supply cables and electrical connections at the engine ECM, transmission ECU, body control lever, hydraulics ECU and cab bulkhead to avoid damage to electrical components. Turn off battery master switch to isolate the batteries before disconnecting any components.
After welding connect all of the above in the reverse order.

Before any welding is done ensure all paint has been removed from the area to be welded. Failure to do so may result in hazardous fumes being given off from the paint.

Note: Always fasten the welding machines ground cable to the piece/frame being welded if possible.

Electric arc welding is recommended for all welded frame repairs. Since the nature and extent of damage to the frame cannot be predetermined, no definite repair procedure can be established. As a general rule however, if parts are twisted, bent or pulled apart, or a frame is bent or out of alignment, no welding should be done until the parts are straightened or realigned.

Successfully welded repairs will depend to a great extent upon the use of the proper equipment, materials and the ability of the welder. The Customer Support Department can be consulted regarding the feasibility of welding repairs.

WARNING
Welding and flame cutting cadmium plated metals produce odourless fumes which are toxic. Recommended industrial hygiene practice for protection of the welding operator from the cadmium fumes and metallic oxides requires enclosure ventilation specifically designed for the welding process. A respiratory protective device such as the M.S.A. 'Gasfoe' respirator with G.M.A. cartridge will provide protection against cadmium, fumes and metallic oxides. The 'Gasfoe' respirator has been approved by the U.S. Bureau of Mines: Approval number 23B-10, and is designed to protect against gases, vapours, and/or metal fumes.

Note: The current from the welding rod always follows the path of least resistance. If, for example, the ground clamp is attached to the rear frame when welding is performed on the front frame, the current must pass a frame connection to return to the welding machine. Since the pivot coupling offers the least resistance but not a sound electrical connection, small electric arcs may be set up across the moving parts which may cause welding blotches on their wearing surfaces and increase the wear rate of these components.

General Welding Procedure

The following general procedure should be used for the repair of defects outwith the vicinity of alloy steel castings.

1. Completely ARC-AIR gouge or grind out the crack until sound metal is reached. If ARC-AIR method is employed, pre-heat area to 100° C (212° F), measure 3 - 4" either side of repair prior to gouging. On completion of gouging grind to remove thin carbon layer.

2. Apply dye-penetrant check to ensure crack has been completely removed.

3. Pre-heat area to 100° C (212° F), measured 3 - 4" either side of repair. Avoid local overheating.

4. Weld completely using E-7016 electrodes. Care must be taken to ensure electrodes are protected from moisture pick-ups at all times.

5. Allow repair weld to cool slowly.

6. Grind and blend repair to original contour. Paint heat damaged areas.

The following general procedure should be used for the repair of defects in alloy steel castings and in the welds joining steel castings.

1. Completely ARC-AIR gouge or grind out the crack until sound metal is reached. If ARC-AIR method is employed, pre-heat area to 200° C (392° F), measure 3 - 4" either side of repair prior to gouging. On completion of gouging grind to remove thin carbon layer.

2. Apply dye-penetrant check to ensure crack has been completely removed.

3. Pre-heat area to 200° C (392° F), measured 3 - 4" either side of repair. Avoid local overheating.

4. Weld completely using E-7016 electrodes. Care must be taken to ensure electrodes are protected from moisture pick-ups at all times.

5. On completion of welding, post-heat repair area to 400° C (752° F), measure 3 - 4" either side of repair.

6. If welding has to be interrupted for any reason, e.g. overnight, post-heat immediately as in Step 5.

* * * *

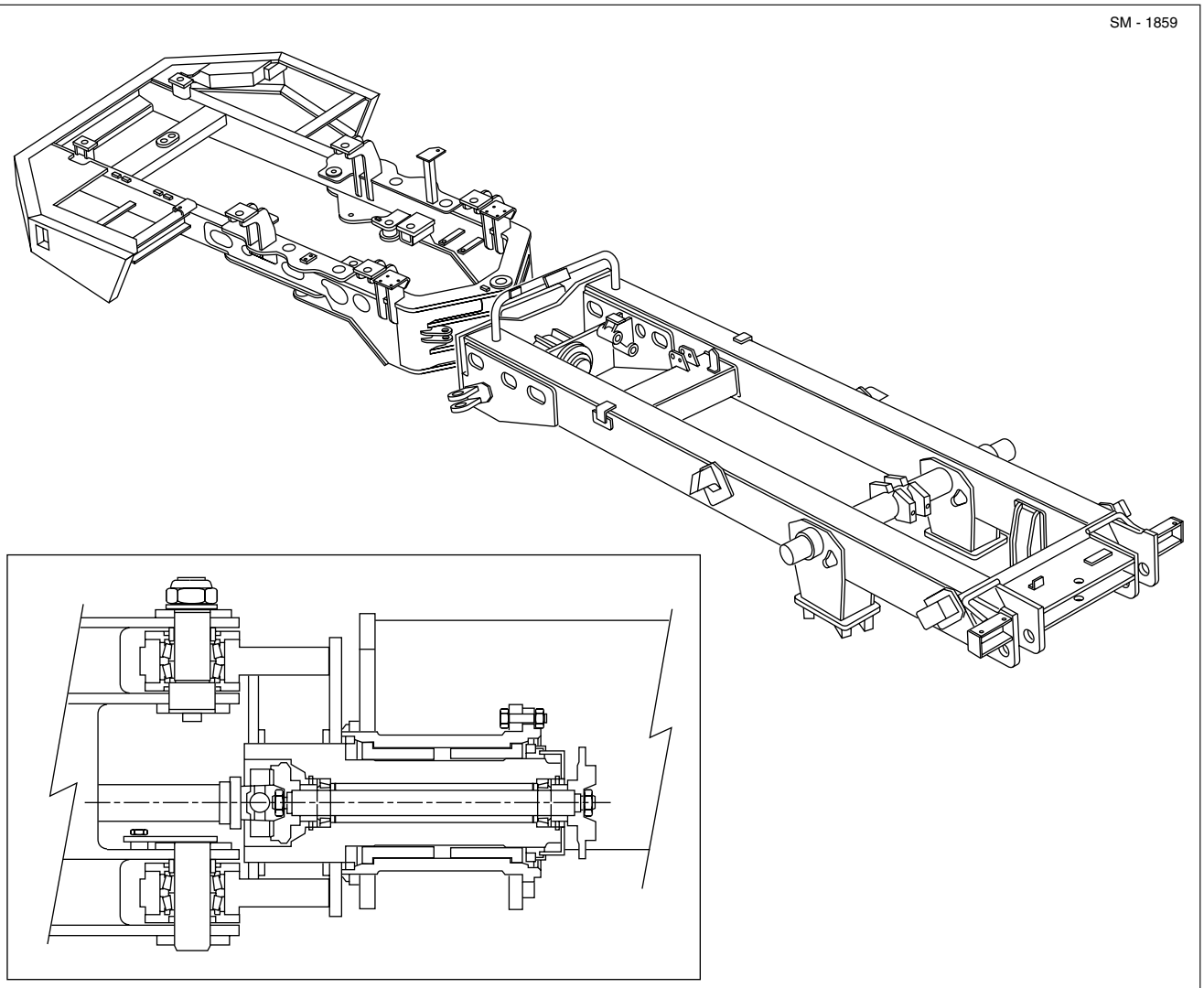

Fig. 1 - General Arrangement of Frame Assemblies

DESCRIPTION

The front and rear frames are all-welded high grade steel fabrications, with rectangular box section beams forming the main side and cross-members. These heavy duty structures are designed to withstand the severe loadings incurred when operating over rough terrain.

The front frame houses engine, transmission, hydraulic and fuel tanks and carries the cab, front suspension and front drive axle. The rear frame carries the body, body cylinders, rear suspension system and the rear drive axles.

Inter-frame oscillation is provided by a robust cylindrical coupling, carried on large nylon bushes. Steering is by frame articulation to 45 degrees either side by two widely spaced vertical pivot pins in taper roller bearings.

Note: For details on the articulation and oscillation pivot and procedures for separating the front and rear frames, refer to Section 100-0020, ARTICULATION AND OSCILLATION PIVOT.

MAINTENANCE

Note: This section covers maintenance of the front and rear frames only.

Inspection

Inspect the frames and attached parts at intervals not exceeding 250 hours for cracked or broken welds and bending of the frame. Any defects found should be repaired before they progress into major failures.

Straightening

If the frame is not too badly sprung or twisted, hydraulic straightening and aligning equipment can be used to straighten the frame without dismantling the machine. However, if the frame is severely damaged, it will be necessary to disassemble the machine in order to repair or replace the frame assembly.

All straightening operations should be performed without application of heat if possible. If heat must be applied, do not heat the metal beyond a dull cherry red colour, as it will result in serious weakening of the frame by decreasing the tensile strength of the steel. When it is necessary to apply heat, apply it uniformly over the area to be straightened until the metal reaches a uniform colour. Protect the heated surface from drafts to prevent sudden cooling of the metal. If the frame or frame parts cannot be straightened they must be replaced.

Welding

WARNINGS

Before any welding is done on a machine equipped with the DDEC system, disconnect wiring harnesses at the ECM, connections at body hydraulics joystick, all battery connections at both positive and negative terminals and ground cable to alternator to avoid damage to electrical components. Turn battery master switch to the 'Off' position before disconnecting any components. Remove battery ground cable first, and reconnect last, to avoid damaging electrical components.

Before any welding is done ensure all paint has been removed from the area to be welded. Failure to do so may result in hazardous fumes being given off from the paint.

Note: Prior to welding, switch off/disconnect the following in the order given. Failure to do so may seriously damage the machines electrical components.

a - Turn keyswitch off
b - Turn battery master switch off
c - Battery earth cables
d - Battery supply cables
e - Alternator earth cables
f - Alternator supply cables
g - Body hydraulics joystick
h - Transmission (Est-37) connector
i - ECM interface harness connector (30 pin RHS)
j - ECM power harness connector (5 pin RHS)
k - ECM sensor harness connector (30 pin LHS)
l - ECM engine to transmission datalink connector (6 pin RHS)

After welding, connect all of the above in the reverse order.

Note: Always fasten the welding machines ground cable to the piece/frame being welded if possible.

Electric arc welding is recommended for all welded frame repairs. Since the nature and extent of damage to the frame cannot be predetermined, no definite repair procedure can be established. As a general rule however, if parts are twisted, bent or pulled apart, or a frame is bent or out of alignment, no welding should be done until the parts are straightened or realigned.

Successfully welded repairs will depend to a great extent upon the use of the proper equipment, materials and the ability of the welder. The Service Department can be consulted regarding the feasibility of welding repairs.

Reinforcement

Frame reinforcement can be made with channel, angle or flat structural stock. Whenever possible, the reinforcement should extend well beyond the bent, broken or cracked area. The reinforcement stock thickness should not exceed that of the frame stock and the material should be of the same tensile strength.

Painting

To keep rust and corrosion to a minimum, periodic painting of abrasions and other exposed metal areas on the frames is highly recommended.

If painting of a frame is required, thoroughly clean the areas to be painted. Apply a primer coat of synthetic red oxide and then a finish coat of synthetic enamel.

* * * *

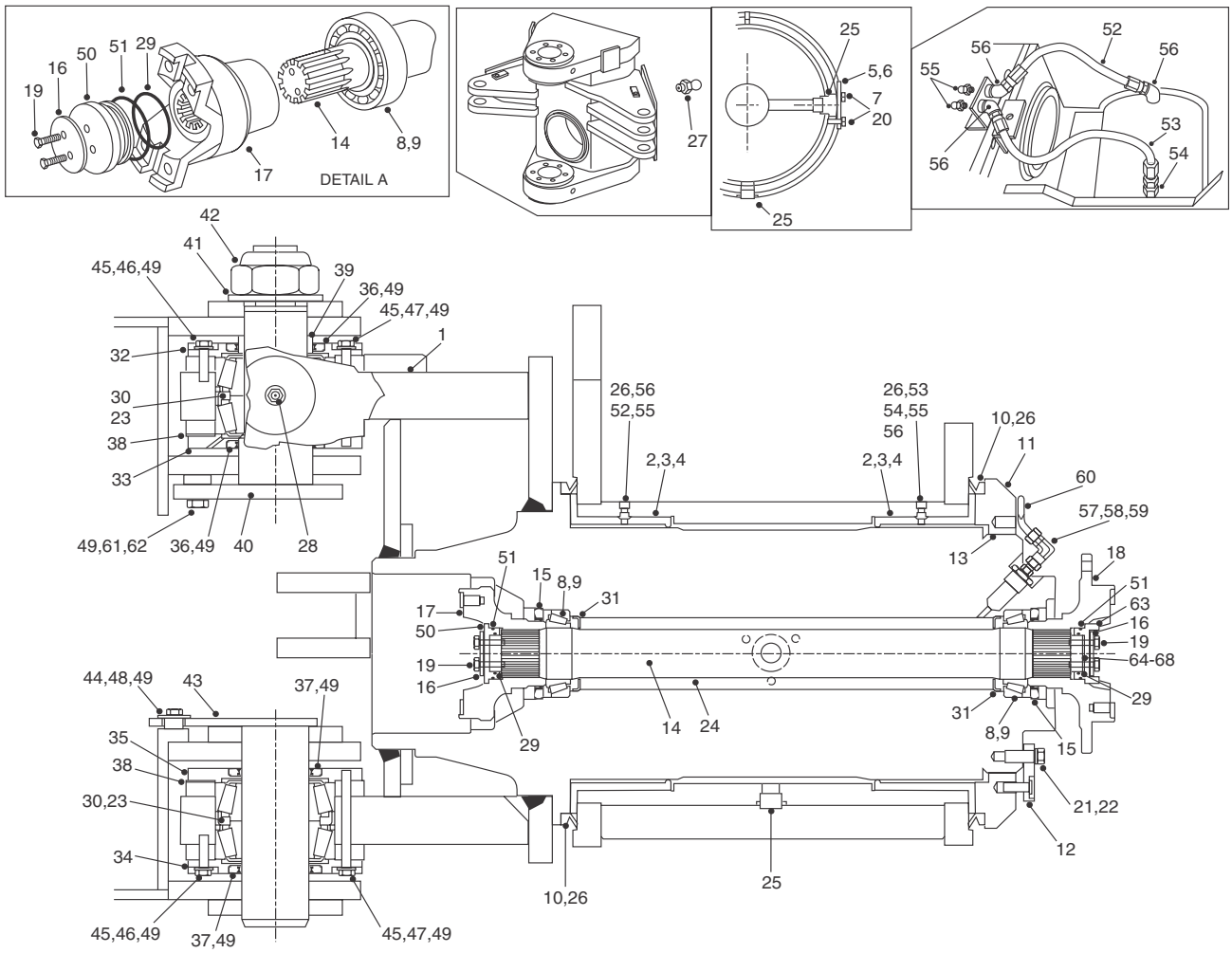

1 - Pivot Assembly
2 - Nylon Bush
3 - Loctite 648
4 - Loc Quick Primer
5 - Gasket
6 - Cover Plate
7 - Bolt
8 - Bearing Assy - Cup
9 - Bearing Assy - Cone
10 - 'V' Ring Seal
11 - Thrust Nut
12 - Locking Plate
13 - Antiseize Comp
14 - Driveshaft
15 - Seal
16 - Lockplate
17 - Front Yoke
18 - Brake Yoke
19 - Bolt
20 - Washer
21 - Lockwasher
22 - Bolt
23 - Extreme Pressure Lithium No.2 Grease
24 - SAE 80W-90 EP Gear Oil
25 - Plug
26 - Extreme Pressure Multipurpose Grease
27 - Lube Fitting
28 - Plug
29 - 'O' Ring
30 - Bearing Assembly
31 - Retaining Ring
32 - Seal Housing
33 - Seal Housing
34 - Seal Housing
35 - Seal Housing
36 - Seal
37 - Seal
38 - Shim
39 - Spacer
40 - Upper Pin
41 - Washer
42 - Nut
43 - Lower Pin
44 - Hardened Washer
45 - Washer
46 - Bolt
47 - Bolt
48 - Bolt
49 - Loctite 243
50 - Thrustcollar-Front
51 - 'O' Ring
52 - Hose Assembly
53 - Hose Assembly
54 - Connector
55 - Lube Fitting
56 - Elbow
57 - Adaptor
58 - Connector
59 - Elbow
60 - Pipe Assembly
61 - Washer
62 - Bolt
63 - Thrust collar-Rear
64 - Shim
65 - Shim
66 - Shim
67 - Shim
68 - Shim

Fig. 1 - Articulation and Oscillation Pivot

DESCRIPTION AND OPERATION

The articulation and oscillation pivot allows the front and rear frames to rotate horizontally (articulation) and tilt laterally (oscillation) with respect to each other. It is also the main load bearing coupling between the two frames. The pivot assembly houses the driveshaft connecting the drive between the front and rear frames.

Articulation bearings, oscillation bushes, pivot driveshaft bearing and associated parts can be removed, inspected and replaced or renewed by following the procedures outlined in this section.

THRU-DRIVE DRIVESHAFT

Numbers in parentheses refer to Fig. 1, unless otherwise specified.

Note: The following procedures assume that only thru-drive components require repair.

Note: Tighten all fasteners without special torques specified to torques listed in Section 300-0080, STANDARD BOLT AND NUT TORQUE SPECIFICATIONS.

WARNINGS
To prevent personal injury and property damage, be sure wheel blocks are properly secured and of adequate capacity to do the job safely.

When necessary to drive out or drive on components during disassembly/assembly, be sure to use a soft drift to prevent property damage and personal injury.

Removal and Disassembly

1. Position the vehicle on a level work area and apply parking brake.

2. Raise body and install body safety prop to secure body in partially raised position.

3. Shut down engine and block all wheels securely.

4. Identify the relationship of the driveline caps to the transmission yoke and front yoke (17). Remove capscrews and remove driveline from vehicle.

Note: Take extra care when handling drivelines as any deformity on a rotating mass creates vibration and excessive wear during any operation.

5. Remove wheel blocks, start engine and steer vehicle into a full left-hand lock. Shut down engine and block all wheels securely.

6. Remove Lockplate (16) , 2 0ff Front bolts (19) & Front thrust collar (50).

7. Remove and discard 'O' rings (29 & 51) from Thrust collar (50).

8. Place a suitable container under the front of the pivot and pull front yoke (17) from driveshaft (14).

9. Disconnect mounting hardware securing protective guard (if fitted), from beneath the parking brake disc, to the rear frame.

10. Release the parking brake by turning the hex-head on the parking brake actuator fully anticlockwise.

WARNING
Tensioned spring on adjuster.

11. Remove mounting hardware securing parking brake assembly to mounting bracket on frame, then secure parking brake assembly clear of brake disc.

12. Identify the relationship of the driveline caps to brake yoke (18). Remove capscrews, disconnect driveline and secure clear of brake yoke.

13. Withdraw driveshaft assembly (14) from housing by pulling rearwards on parking brake disc/brake yoke assembly (18). If necessary, tap front end of driveshaft (14) to ease removal, take care to avoid damaging threads. Place driveshaft (14) assembly on work bench for further disassembly.

14. Prise out and discard seal (15) from front of the housing.

15. Lift out front bearing assembly cup (8) from front of the housing.

16. If bearing replacement is required, use a suitable puller to remove front and rear bearing assembly cups (8) from the housing.

Note: If either bearing assembly cup or cone (8 or 9) need replacing, they must be replaced as a set.

17. If retaining rings (31) need replacing, use a suitable drift or puller to remove them from the housing.

18.Temporarily install front yoke (17) fully onto front of driveshaft (14) and suitably restrain to resist rotation.

19. Remove mounting hardware securing parking brake disc to brake yoke (18) and remove brake disc.

20. Remove Lockplate (16) , 2 off Rear bolts (19) , Rear Thrust collar (63) & Brake yoke (18) from driveshaft (14). Identify front and rear ends of driveshaft (14).

21. Remove and discard 'O' rings (29 & 51) from Rear Thrust collar (63).

22. Remove and discard seal (15) from driveshaft (14).

23. If bearing replacement is required, use a suitable puller or drift to remove rear bearing assembly cone (9) from driveshaft (14).

Inspection

1. Clean all parts with a suitable solvent and let dry. DO NOT spin bearings with compressed air. Place bearings on a clean surface, cover with a lint free cloth and allow to dry.

2. Check bearing assemblies cups and cones (8 & 9) for wear or damage. Renew as necessary.

Note: If either bearing assembly cup or cone (8 or 9) need replacing, they must be replaced as a set.

3. Inspect splines of driveshaft (14) and yokes (17 & 18) for nicks, burrs or excessive wear. Replace if wear is excessive or splines are nicked. Burrs may be removed with a fine file or medium India stone.

4. Check yokes (17 & 18) for damage in region polished by oil seal lip; even slight damage in this area can cause leakage. Very slight marks may be polished out with fine emery cloth but it is essential that polishing marks are parallel to the seal lip.

5. Replace all seals and 'O' rings with new parts.

Assembly and Installation

1. If removed, use a suitable driver and install retaining rings (31) into housing, ensuring that they butt hard against abutment shoulders.

2. Using a suitable driver, install front bearing cup (8) into tractor end of pivot casing. Ensure it is firmly seated & that a 0.05mm (0.002") feeler gauge **cannot** be inserted between cup and mating face.

3. Check rear bearing cup (8) is firmly seated in the body end of the pivot casing, again ensuring 0.05mm (0.002") feeler gauge **cannot** be inserted between cup and mating face.

4. Lightly oil both bearing assembly cones (9) with SAE 80W - 90 E. P. gear oil (24).

5. Support driveshaft (14) in a suitable fixture & tap one Bearing assembly cone (9) onto driveshaft (14) using a tubular mandrel.

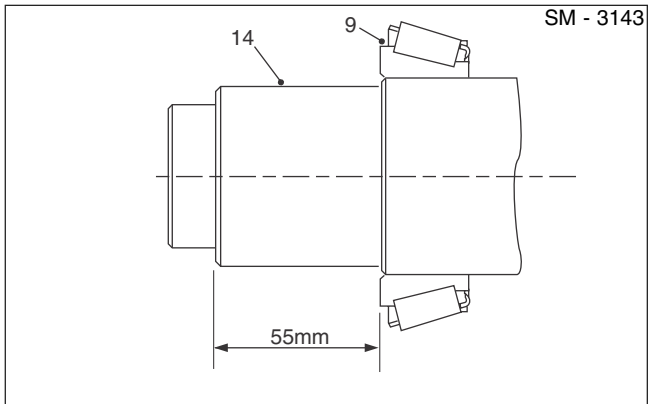

Fig. 2 - Pre assembly of bearing

6. Refer to Fig. 2, Maintain end face of cone approximately 55mm from end of spline face.

7. Insert driveshaft (14) into truck end of pivot casing until bearing assembly cone (9) seats firmly in the bearing asembly cup (8).

8. Apply loctite (3) to new seal (15) and fit over the driveshaft (14) with seal 'Lip' to bearing side.Press seal home using a mandrel.

9. Apply grease to splines of Front yoke (17) and slide onto the drive shaft (14).

10. Fit new 'O'-rings (29 & 51) to Front thrust collar (50) and fit collar over stub end of driveshaft (14) (align mating holes). Fit 2 off front bolts (19).

11. Tighten Front bolts (19) ; alternately 1/4 - 1/2 turns, drawing driveshaft (14) hard against the inner face of Front thrust collar (50). Shaft will be visible through inspection hole on the collar.

12. Lock Front yoke (17) from rotation by a suitable method / bar acting on the ground. Torque front bolts (19) to 54Nm/39 lbf ft.

13. Using special mandrel (15270104) home locking plate (16) onto Bolts (19). Remove the clamping bar.

14. Slide Rear bearing asembly cone (9) onto rear end of drive shaft (14) until it seats in bearing assembly cup (8).

15. Position clamping bar assembly and screw central bolt hard against bolts (19) of front thrust collar (50), enabling body end bearing to be fully seated home.

16. Using mandrel and heavy hammer, drive Rear bearing assembly cone, fully into cup. Now remove clamp bar assembly from front end.

Sm 3144

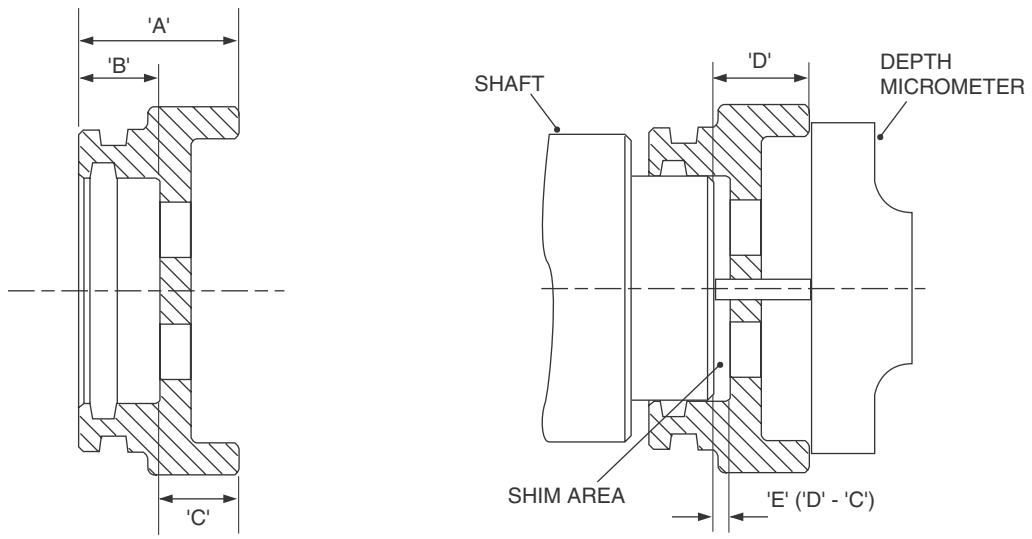

Fig. 3 - Measurements / various

17. Take remaining seal (15), apply loctite (3) and fit over drive shaft with seal 'Lip' to bearing side. Press seal home using a mandrel.

18. Apply grease to splines of brake yoke (18) and slide onto drive shaft (14). Ensure milled slots of driving flanges are aligned with those of brake yoke.

Note : For Measurment letters- refer to fig. 3, unless otherwise stated.

19. Before fitting of Rear Thrust collar (63) record Measurements as stated:

i) Measure total width 'A' of Rear thrust collar (63)

ii) Using Depth micrometer, measure inner bore depth 'B' of collar (63) and record value.

iii) Subtract 'B' from 'A' to determine recess dimension 'C'.

20. Fit Rear thrust collar (63) without 'O'-rings onto Drive shaft (14) and tighten Rear bolts (19) to a nominal torque of 15Nm/11lbf ft.

Note : a gap should be visible between end of shaft and inner face of collar.

21. Using a Depth micrometer, measure distance 'D' from collar (63) outer face to end face of drive shaft (14) via the hole in the collar and record the value.

22. The actual free air space 'E' to be shimmed between end of drive shaft (14) and compression face of Thrust collar (63) equals:

E='D' - 'C'.

23. Now add 0.6mm (0.024") to dimension 'E' to allow for oversize shims. This value is dimension 'F' (End float will be determined by subtraction).

24. Remove Rear bolts (19) and Rear thrust collar (63) from pivot body end and chap drive shaft (14) to free bearing.

25. Calculate the nominal combination of minimum number if shims (64) to achieve the size nearest to dimension 'F'. Record the appropriate part numbers and total nominal thickness value.

26. Select the shims (64) and measure the total actual thickness of the combination. Record this value.

27. Place the shim pack (64) in the rear thrust collar (63) , lock off the Brake yoke (18) from rotation by suitable method / bar on ground. Torque bolts (19) to full torque.

28. Remove the clamp and spin the yoke (18) to ensure driveshaft (14) free rotation.

29. Take a magnetic clock gauge located on the flange of pivot casing, needle acting on rear thrust collar (63)

end face. Check Brake yoke (18) float movement.

30. Take reading obtained and subtract a figure sufficient to give an end float in the range 0.05mm - 0.15mm (0.002" - 0.006"), reduce shim pack (64) accordingly.

31. Remove Rear thrust collar (63) and shims (64) and re-assemble with the apporpriate shims. Ensure 'O'-rings (29 & 51) are now fitted.

32. Lock Brake yoke (18) flange as before ,applying alternate 1/4 -1/2 turns on bolts (19). Torque to 54 Nm (39 lbf ft).

33. Remove the locking bar and confirm that the driveshaft (14) end float is in the range 0.05mm - 0.15mm (0.002" - 0.006") by moving the brake yoke (18) for and aft against the clock gauge.

34. Adjust and refit the shim pack (63) as necessary.

35. Float set correctly; Drive home locking plate (16) using a mandrel (15270104) . Re-check the end float.

36. Install parking brake disc on brake yoke (18) and secure with bolts and washers. Tighten bolts to a torque of 73 Nm (54 lbf ft).

37. Install parking brake assembly to mounting brackets and secure with bolts, washers and nuts. Refer to Section 170-0010, PARKING BRAKE AND MOUNTING.

38. Apply parking brake by turning the hex-head on the parking brake actuator fully clockwise.

39. Apply Loctite 638 to the threads of capscrews used to mount driveline to brake yoke (18). Align match marks and install driveline. Tighten capscrews to a torque of 153 Nm (113 lbf ft).

40. Apply Loctite 638 to the threads of capscrews used to mount driveline between transmission yoke and front yoke (17). Align match marks and install driveline. Tighten capscrews to a torque of 153 Nm (113 lbf ft).

41. Remove bolts (7), washers (20), gasket (5) and cover plate (6) from side of oscillation hub to gain access to filler/level hole plug (25) on pivot assembly (1). Remove filler/level plug (25).

42. Add SAE 80W - 90 E. P. gear oil (24) through filler/level hole in pivot assembly (1) until the oil is level with the bottom of filler/level hole.

43. Remove plug (25) from underside of oscillation hub to drain the cavity between the oscillation hub and pivot assembly (1) of any oil that entered while filling the driveshaft bearing housing.

44. Install plug (25) into filler/level hole on pivot assembly (1). Install gasket (5) and cover plate (6) on side of oscillation hub, secure with bolts (7) and washers (20).

45. Install plug (25) into cavity drain port on underside of oscillation hub.

46. Install parking brake disc protective guard (if fitted) and secure with bolts, washers and nuts. Tighten nuts to a torque of 73 Nm (54 lbf ft).

47. Start engine, raise body, lower body safety prop and lower body.

48. Remove wheel blocks.

ARTICULATION COMPONENTS

Numbers in parentheses refer to Fig. 1, unless otherwise specified.

Note: The following procedures assume that only components associated with articulation require repair.

Note: It is essential that the grease used for articulation components is Extreme Pressure Lithium Complex No. 2 (23), as specified in Section 300-0020, LUBRICATION SYSTEM.

Note: Tighten all fasteners without special torques specified to torques listed in Section 300-0080, STANDARD BOLT AND NUT TORQUE SPECIFICATIONS.

WARNINGS

To prevent personal injury and property damage, be sure wheel blocks, blocking materials and lifting equipment are properly secured and of adequate capacity to do the job safely.

When necessary to drive out or drive on components during disassembly/assembly, be sure to use a soft drift to prevent property damage and personal injury.

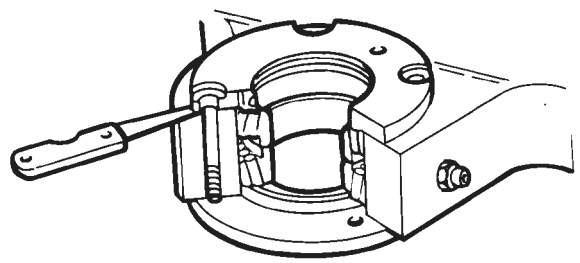

Fig. 4 - Determining Shim Thickness

Disconnecting Front and Rear Frames

Note: The front and rear frames can be separated sufficiently to permit disassembly/assembly of the articulation components without disconnecting hydraulic lines or electrical wiring.

1. Position the vehicle on a level work area and apply parking brake.

2. Raise body and install body safety prop to secure body in partially raised position.

3. Shut down engine and block all wheels securely.

4. Identify the relationship of the driveline caps to the transmission yoke and front yoke (17). Remove capscrews and remove driveline from vehicle.

5. Support tractor frame at front and rear with suitably placed stands or timbers so the frame will remain level during and after pin removal.

6. Remove bolts, washers and pins securing steering cylinders to pivot. Secure steering cylinders clear of pivot.

7. Release the parking brake by turning the hex-head on the parking brake actuator fully anticlockwise.

⚠ WARNING
Tensioned spring on adjuster.

8. Attach suitable lifting equipment to pivot/rear frame assembly. Lifting equipment must prevent pivot from oscillating after separation, and, be capable of pulling pivot/rear frame assembly clear of front frame. Raise lifting equipment to support pivot/rear frame assembly.

9. Remove bolt (62), washer (61), large nut (42) and washer (41) securing upper pin (40).

10. Remove upper pin (40). If necessary tap upper pin (40) to ease removal taking care to avoid damaging the threads.

Note: It may be necessary to relieve binding between the pin and pin bores by raising or lowering the pivot/ rear frame assembly.

11. Remove bolt (48) and hardened washer (44) securing lower pin (43).

12. Remove lower pin (43). If necessary tap lower pin (43) to ease removal taking care to avoid damaging the pin.

Note: Only separate the frames sufficiently to permit removal of the articulation bearings or damage to hydraulic and electrical connections could result.

13. Remove blocks from rear wheels and use lifting equipment to pull pivot/rear frame assembly clear of the front frame. After moving, block pivot/rear frame assembly and block the wheels.

14. Remove spacer (39) noting orientation to ensure correct installation.

Disassembly

1. Identify seal housings (32, 33, 34 & 35) to ensure correct location on assembly/installation.

Note: Seal housings (32, 33, 34 & 35) are not interchangeable.

2. Remove bolts (46 & 47), washers (45), seal housings (32, 33, 34 & 35) and upper and lower shims (38).

3. Prise out and discard seals (36 & 37) from the housings.

4. Remove and tag all bearing assemblies (30) with spacers to ensure correct assembly/installation.

Note: Bearing assemblies (30) and spacers are a matched set, never interchange cups, cones or spacers between sets.

Inspection

1. Clean all parts with a suitable solvent and let dry. DO NOT spin bearings with compressed air. Place bearings on a clean surface, cover with a lint free cloth

and allow to dry.

2. Check bearing assemblies (30) and spacers, and pins (40 & 43) for wear or damage. Renew as necessary.

Note: Bearing assemblies (30) and spacers must be renewed as a matched set.

3. Replace all seals with new parts.

Assembly

1. Apply Loctite 243 (49) sparingly to bore of seal housings (32, 33, 34 & 35).

2. Using a suitable driver, install seals (36 & 37) into seal housings (32, 33, 34 & 35) ensuring that the metal ring on inside of the seals are not disturbed, and, that they are located towards the inside of seal housing.

3. Apply Loctite 243 (49) to threads of outer seal housing bolts (46).

4. Place outer seal housings (32 & 34) in position ensuring that grease relief hole in seal housings are directly opposite bearing grease port on pivot. Secure with bolts (46) and washers (45). Tighten bolts (46) to a torque of 94 Nm (68 lbf ft).

Note: Bearing assemblies (30) and spacers are a matched set, never interchange cups, cones or spacers between sets.

5. Using Extreme Pressure Lithium Complex No. 2 grease (23), pack bearing assemblies (30), including end faces, and install bearings.

6. Place inner seal housings (33 & 35) temporarily in position and secure with bolts (47) and washers (45). Tighten bolts (47) to a torque of 16 Nm (12 lbf ft).

7. Using feeler gauges, as shown in Fig. 4, measure the dimension between the inner pivot faces and seal housings (33 & 35). Measure at 3 positions equally spaced around seal housings and determine average dimension, this is the size of shims (38) required.

8. Remove bolts (47), washers (45) and inner seal housings (33 & 35).

9. Install shims (38) as calculated at Step 7, reinstall inner seal housings (33 & 35) and secure with bolts (47) and washers (45). Tighten bolts (47) to a torque of 94 Nm (68 lbf ft).

Connecting Front and Rear Frames

1. Install spacer (39) in upper outer seal housing (32), as noted on removal.

2. Smear bearing and pin bores with Extreme Pressure Lithium Complex No. 2 grease (23).

3. Attach suitable lifting equipment to pivot/rear frame assembly. Lifting equipment must prevent pivot from oscillating and be capable of pulling pivot/rear frame assembly to align pivot bearing bores and front frame pin bores. Raise lifting equipment to support pivot/rear frame assembly.

4. Remove blocks from rear wheels and blocking from pivot/rear frame assembly. Using lifting equipment, pull pivot/rear frame assembly to align pivot bearing bores and front frame pin bores. Block wheels and block pivot/rear frame assembly to remain level and stationary.

5. Freeze upper and lower pins (40 & 43) to ease installation.

6. Smear lower pin (43) with Extreme Pressure Lithium Complex No. 2 grease (23) and install through front frame and bearing bores.

Note: It may be necessary to relieve binding between the pin and pin bores by raising or lowering pivot/rear frame assembly.

7. Apply Loctite 243 (49) to threads of bolt (48) and secure lower pin (43) with bolt (48) and hardened washer (44). Tighten bolt (48) to a torque of 73 Nm (54 lbf ft).

8. Smear upper pin (40) with Extreme Pressure Lithium Complex No. 2 grease (23) and install through front frame and bearing bores.

9. Apply Loctite 243 (49) to threads of bolt (62). Secure upper pin (40) with bolt (62), washer (61), large nut (42) and washer (41). Tighten nut (42) to a torque of 1 425 Nm (1 050 lbf ft).

Final Assembly

1. Apply parking brake by turning the hex-head on the parking brake actuator fully clockwise.

2. Remove lifting equipment from pivot/rear frame assembly.

3. Remove stands or timbers from front frame.

4. Apply Loctite 270 to the threads of capscrews used to mount driveline between transmission yoke and front yoke (17). Align match marks and install driveline. Tighten capscrews to a torque of 153 Nm (113 lbf ft).

5. Align steering cylinder bores and mounting pin bores on pivot, install pins and secure with bolts and washers. Tighten bolts to a torque of 73 Nm (54 lbf ft).

6. Remove plugs (28) from articulation bearing, grease ports and replace with lube fittings (27).

Note: Lube fittings (27) are stored on pad on side of pivot assembly (1).

7. Fill bearing housings with Extreme Pressure Lithium Complex No. 2 grease (23), through lube fittings (27), until excess grease starts to escape from seal housings (32 & 34).

8. Remove lube fittings (27) and reinstall plugs (28). Store lube fittings (27) on pad on side of pivot assembly (1).

9. Start engine, raise body, lower body safety prop and lower body.

10. Remove wheel blocks.

OSCILLATION COMPONENTS

Numbers in parentheses refer to Fig. 1.

Note: The following procedure assumes that only components associated with oscillation require repair.

Note: It is necessary to disconnect the front and rear frames at the articulation point to service the oscillation components.

Note: It is essential that the grease used for oscillation components is Extreme Pressure Multipurpose Grease (26), as specified in Section 300-0020, LUBRICATION SYSTEM.

Note: Tighten all fasteners without special torques specified to torques listed in Section 300-0080, STANDARD BOLT AND NUT TORQUE SPECIFICATIONS.

⚠ WARNINGS

To prevent personal injury and property damage, be sure wheel blocks, blocking materials and lifting equipment are properly secured and of adequate capacity to do the job safely.

⚠ When necessary to drive out or drive on components during disassembly/assembly, be sure to use a soft drift to prevent property damage and personal injury.

⚠ Hydraulic fluid pressure will remain within the braking system after engine shut down. Operate the treadle pedal continuously until the pressure has dissipated before carrying out any work on the braking system or serious injury could result.

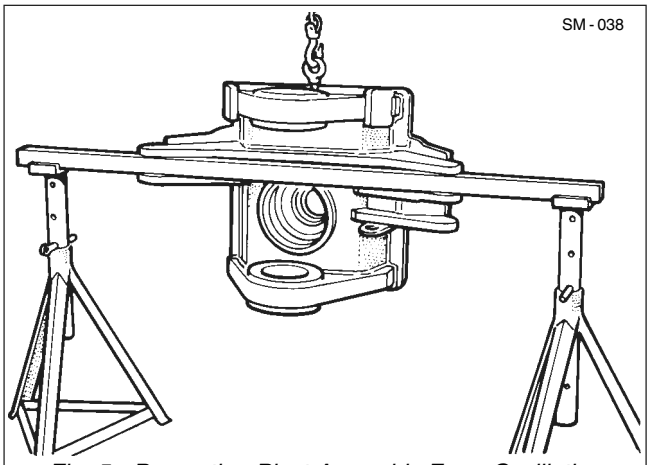

Fig. 5 - Preventing Pivot Assembly From Oscillating

Disconnecting Front and Rear Frames

1. Position the vehicle on a level work area and apply parking brake.

2. Raise body and install body safety prop to secure body in partially raised position.

3. Shut down engine and block all wheels securely.

4. Depress and release brake pedal continuously to relieve the pressure in the braking system.

5. Carefully loosen brake lines at base of both accumulators to check that the pressure has released. Re-tighten brake lines.

6. Tag all hydraulic lines and electrical wiring between front and rear frames to ensure correct assembly/ installation. Disconnect all hydraulic lines and plug openings to prevent ingress of dirt. Disconnect electrical wiring and any other attachments which could be damaged on separation of front and rear frames.

7. Identify the relationship of the driveline caps to the transmission yoke and front yoke (17). Remove capscrews and remove driveline from the vehicle.

8. Support tractor frame at front and rear with suitably placed stands or timbers to keep the frame level during and after pin removal.

9. Remove bolts, washers and pins securing steering cylinders to pivot. Secure steering cylinders clear of pivot.

10. Release the parking brake by turning the hex-head on the parking brake actuator fully anticlockwise.

> ⚠ **WARNING**
> **Tensioned spring on adjuster.**

11. Attach suitable lifting equipment to pivot/rear frame assembly. Lifting equipment must prevent pivot from oscillating after separation, and, be capable of pulling pivot/rear assembly clear of front frame. Raise lifting equipment to support pivot/rear frame assembly.

12. Remove bolt, washer, large nut (42) and washer (41) securing upper pin (40).

13. Remove upper pin (40). If necessary tap upper pin (40) to ease removal taking care to avoid damaging the threads.

Note: It may be necessary to relieve binding between the pin and pin bores by raising or lowering the pivot/ rear frame assembly.

14. Remove bolt (48) and hardened washer (44) securing lower pin (43).

15. Remove lower pin (43). If necessary tap lower pin (43) to ease removal taking care to avoid damaging the pin.

16. Remove blocks from rear wheels and use lifting equipment to pull pivot/rear frame assembly clear of the front frame. After moving, block pivot/rear frame assembly and block the wheels.

17. Remove spacer (39) noting orientation to ensure correct installation. Cover articulation bearings to prevent ingress of dirt.

Disassembly

1. Remove protective guard (if fitted) from beneath parking brake disc by removing mounting hardware securing guard to the rear frame. Refer to Section 170-0010, PARKING BRAKE AND MOUNTING.

2. Remove mounting hardware securing parking brake assembly to mounting bracket on frame. Remove and secure parking brake assembly clear of brake disc.

3. Identify the relationship of the driveline caps to brake yoke (18). Remove capscrews, disconnect driveline and secure clear of brake yoke (18).

4. Remove mounting hardware securing parking brake disc to brake yoke (18) and remove brake disc.

5. Place a suitable container under rear brake yoke (18) to catch oil released when pulling brake yoke (18) from driveshaft (14).

6. Remove Rear bolts (19), Lockplate (16) & Rear thrust collar (63). Pull brake yoke (18) from driveshaft (14) .

7. Remove adaptor (57), connector (58), elbow (59) and pipe assembly (60) from oscillation hub.

8. Remove bolts (22) and washers (21) securing locking plate (12). Remove locking plate (12).

9. Restrain pivot assembly (1) to prevent it oscillating, by placing a heavy bar between the steering cylinder mountings. Lock the bar in position using suitable trestles or stands. See Fig. 5.

10. Using a suitable tool, remove thrust nut (11). If wear area of thrust nut (11) is damaged, replace thrust nut (11).
11. Insert an M20 eyebolt into tapped pad provided on top of pivot assembly (1) and attach suitable lifting equipment.
12. Remove pivot restraining bar.

13. Using lifting equipment, carefully pull pivot assembly (1) clear of oscillation hub. Place pivot assembly (1) in a suitable work area for further disassembly.

14. Note position of front 'V' ring (10) to aid in 'Installation'. Remove and discard 'V' ring (10).

15. Inspect nylon oscillation bushes (2) as described in 'Inspection'. If bushes are to be renewed, proceed with step 16.

16. Remove nylon oscillation bushes (2) with hammer and chisel.

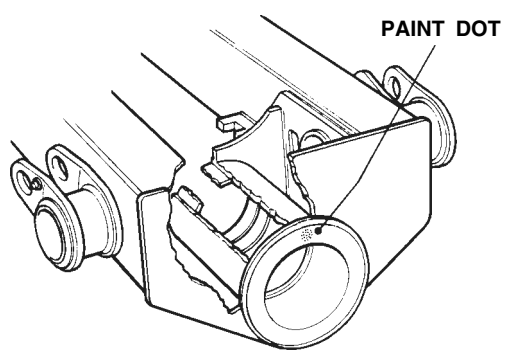

Fig. 6 - Installing Oscillation Bushes

Note: The suggested method is to make an axial cut along the bush then to lever the bush in order to collapse it upon itself.

Inspection

1. Clean nylon oscillation bushes with a suitable solvent and allow to dry.

2. Inspect nylon oscillation bushes for wear, scoring, erosion and 'out of round'. Pay particular attention to the thrust faces of the bushes which should also be inspected for cracking/splitting. Renew if required.

3. Replace all seals with new parts.

Assembly

Numbers in parentheses refer to Fig. 1.

Note: Tighten all fasteners without special torques specified to torques listed in Section 300-0080, STANDARD BOLT AND NUT TORQUE SPECIFICATIONS.

WARNING
To prevent personal injury and property damage, be sure wheel blocks are properly secured and of adequate capacity to do the job safely.

1. Wipe bush housing clean using a suitable solvent and allow to dry.

2. Apply Loctite 648 (3) and Loc Quick Primer (4) and align new bushes (2) to housing with grease holes aligned vertically and identification 'PAINT DOT' at Top Dead Centre. Refer to Fig. 6. Drift bushes (2) into housing using hammer with soft packing for protection.

3. Install plug (25) in filler/level hole on pivot assembly (1). Install gasket (5) and cover plate (6) on side of oscillation hub and secure with bolts (7) and washers (20).

4. Install plug (25) in cavity drain port on underside of oscillation hub.

5. Install plugs (28) into oscillation bearing grease ports.

6. Lightly coat 'V' ring (10) and machined surfaces of pivot with Extreme Pressure Multipurpose Grease (26) and, install 'V' ring (10), with lip towards rear, on front of oscillation hub.

7. Using suitable lifting equipment, and taking care to prevent damaging bushes (2) or pivot threads, install pivot assembly (1) into rear frame.

8. Lightly coat 'V' ring (10) and machined surfaces of pivot with Extreme Pressure Multipurpose Grease (26) and, install 'V' ring (10), with lip towards front, on rear of oscillation hub.

9 . a) Restrain pivot assembly (1) to prevent it oscillating, by placing a heavy bar between the steering cylinder mountings. Lock the bar in position using suitable trestles or stands. See Fig. 5.

b) Secure a suitable tool to pivot thrust nut (11) and tighten thrust nut (11) until there is no end float/ clearance at thrust face of either bush. Slacken thrust nut (11) until pin of the locking plate (12) can be inserted in the first available hole in the thrust nut (11).

c) Secure locking plate (12) with bolts (22) and lockwashers (21). Torque tighten bolts (22) to 94 Nm (69 lbf ft).

10. Install adaptor (57), connector (58), elbow (59) and pipe assembly (60) to oscillation hub.

11. Install brake yoke (18) on driveshaft (14) until it butts against bearing assembly cup and cone (8 & 9).

12. Install parking brake disc on brake yoke (18) and secure with bolts, washers and nuts. Tighten bolts to a torque of 73 Nm (54 lbf ft).

13. Install rear of driveshaft (14).

14. install Brake yoke (18) , Rear thrust collar (63) ensuring 'O'-rings (29& 51) are in place , shim pack (64) and bolts (19).

15. Lock off Brake yoke flange as before (18) with suitable clamping method. Torque bolts (19) to 73 Nm (lbf ft)

16. Take a magnetic clock gauge located on the flange of pivot casing , needle acting on Rear thrust collar (63) end face. Check Brake yoke (18) float movement. Ensure still within range 0.05mm - 0.15mm (0.002" - 0.006").
17. If float is incorrect, alter arrangement of shim pack (64) to bring within size.

18. Using special mandrel (15270104) home locking plate (16) onto bolts (19). Remove clamping bar.

Connecting Front and Rear Frames

1. Install spacer (39) in upper bearing assembly (30) as noted on removal.

2. Smear bearing assembly (30) and pin bores with Extreme Pressure Lithium Complex No. 2 grease (23).

3. Attach suitable lifting equipment to pivot/rear frame assembly. Lifting equipment must prevent pivot from oscillating and be capable of pulling pivot/rear frame assembly to align pivot bearing bores and front frame pin bores. Raise lifting equipment to support pivot/rear frame assembly.

4. Remove blocks from rear wheels and blocking from pivot/rear frame assembly. Using lifting equipment, pull pivot/rear frame assembly to align pivot bearing bores and front frame pin bores. Block wheels and block pivot/rear frame assembly to remain level and stationary.

5. Freeze upper and lower pins (40 & 43) to ease installation.

Note: It may be necessary to relieve binding between the pin and pin bores by raising or lowering pivot/rear frame assembly.

6. Smear lower pin (43) with Extreme Pressure Lithium Complex No. 2 grease (23) and install through front frame and bearing bores.

7. Apply Loctite 243 (49) to threads of bolt (48). Secure lower pin (43) with bolt (48) and hardened washer (44). Tighten bolt (48) to a torque of 73 Nm (54 lbf ft).

8. Smear upper pin (40) with Extreme Pressure Lithium Complex No. 2 grease (23) and install through front frame and bearing bores.

9. Apply Loctite 243 (49) to threads of bolt (62). Secure upper pin (40) with bolt (62), washer (61), washer (41) and large nut (42). Tighten nut (42) to a torque of 1 425 Nm (1 050 lbf ft).

Final Assembly

1. Install parking brake assembly to mounting brackets and secure with bolts, washers and nuts. Refer to Section 170-0010, PARKING BRAKE AND MOUNTING.

2. Apply parking brake by turning the hex-head on the parking brake actuator fully clockwise.

WARNING
Tensioned spring on adjuster.

3. Remove lifting equipment from pivot/rear frame assembly.

4. Remove stands or timbers from front frame.

5. Apply Loctite 270 to threads of capscrews used to mount driveline between transmission yoke and front yoke (17). Align match marks and install driveline. Tighten capscrews to a torque of 153 Nm (113 lbf ft).

6. Align match marks and reconnect driveline to brake yoke (18). Tighten capscrews to a torque of 153 Nm (113 lbf ft).

Note: Take extra care when handling drivelines as chips, dents, burrs or deformity on any rotating mass creates vibration and excessive wear during any operation.

7. Align steering cylinder bores and mounting pin bores on pivot. Install pins and secure with bolts and washers. Tighten bolts to a torque of 73 Nm (54 lbf ft).

8. Connect hydraulic lines and electrical wiring as noted on disassembly.

9. Remove bolts (7), washers (20), gasket (5) and cover plate (6) from side of oscillation hub to gain access to filler/level plug (25) on pivot assembly (1). Remove filler/level plug (25).

10. Add SAE 80W - 90 E. P. gear oil (24) through filler/level hole in pivot assembly (1) until the oil is level with the bottom of filler/level hole.

11. Remove plug (25) from underside of oscillation hub to drain the cavity between the oscillation hub and pivot assembly (1) of any oil that entered while filling the driveshaft bearing housing.

12. Install plug (25) in filler/level hole on pivot assembly (1). Install gasket (5) and cover plate (6) on side of oscillation hub, secure with bolts (7) and washers (20).

13. Install plug (25) in cavity drain port on underside of oscillation hub.

14. Remove plugs (28) from articulation bearing grease ports and replace with lube fittings (27).

Note: Lube fittings (27) are stored on pad on side of pivot assembly (1).

15. Fill bearing housings with Extreme Pressure Lithium Complex No. 2 grease (23) through lube fittings (27) until excess grease starts to escape from seal housings (32 & 34).

16. Remove lube fittings (27) and reinstall plugs (28). Store grease fittings (27) on pad on side of pivot assembly (1).

17. Add Extreme Pressure Multipurpose grease (26) to oscillation bushing lube fittings (55) on top of oscillation hub. Lube until excess grease in seen.

18. Install parking brake disc protective guard (if fitted) and secure with bolts, washers and nuts. Tighten nuts to a torque of 73 Nm (54 lbf ft).

19. Start engine to charge hydraulic systems, raise body, lower body safety prop and lower the body.

20. Bleed the braking system as described in Section 165-0010, BRAKE PARTS.

21. Remove wheel blocks.

MAINTENANCE

Numbers in parentheses refer to Fig. 1.

Every 250 hours, oscillation bushes must be lubricated. Add Extreme Pressure Multipurpose grease (26) to oscillation bushing lube fittings (55) on top of oscillation hub. Lube until excess grease in seen.

WARNING
To prevent personal injury and property damage, be sure wheel blocks are properly secured and of adequate capacity to do the job safely.

Every 250 hours, check the end float/clearance at the thrust face of the oscillation bushes. Any clearance found must be removed by adjustment of the thrust nut, as described in step 9 of 'Assembly' procedure.

Note: A practical method of establishing the effective adjustment of the thrust nut is to use movement of the machines body in the raised position. Move the body from fully raised to almost fully raised while watching the effect of this action on the frame and pivot arrangement. Any slackness between the thrust nut and thrust faces will be clearly visible movement of the frame.

Every 1 000 hours (6 months), follow the procedure given below to check the oil level in the driveshaft bearing housing, and, lubricate the articulation and oscillation bearings.

Note: It is essential that the grease used for articulation components is Extreme Pressure Lithium Complex No. 2 grease (23), as specified in Section 300-0020, LUBRICATION SYSTEM.

1. Position the vehicle on a level work area and apply parking brake.

2. Raise body and install body safety prop to secure body in partially raised position.

3. Shut down engine and block all wheels securely.

4. Remove protective guard (if fitted) from beneath parking brake disc by removing nuts, washers and bolts securing guard to rear frame.

5. Remove bolts (7), washers (20), gasket (5) and cover plate (6) from side of oscillation hub to gain access to filler/level plug (25) on pivot assembly (1). Remove filler/level plug (25).

6. Add SAE 80W - 90 E. P. gear oil (24) through filler/level hole in pivot assembly (1) until the oil is level with the bottom of filler/level hole.

7. Remove plug (25) from underside of oscillation hub to drain the cavity between the oscillation hub and pivot assembly (1) of any oil that entered while filling the driveshaft bearing housing.

8. Install plug (25) into filler/level hole on pivot assembly (1). Install gasket (5) and cover plate (6) on side of oscillation hub, secure with bolts (7) and washers (20).

9. Install plug (25) into cavity drain port on underside of oscillation hub.

10. Remove plugs (28) from articulation bearing grease ports and replace with lube fittings (27).

Note: Lube fittings (27) are stored on pad on side of pivot assembly (1).

11. Fill bearing housings with Extreme Pressure Lithium Complex No. 2 grease (23) through lube fittings (27) until excess grease starts to escape from seal housings (32 & 34).

12. Remove lube fittings (27) and reinstall plugs (28). Store grease fittings (27) on pad on side of pivot assembly (1).

13. Add Extreme Pressure Multipurpose grease (26) to oscillation bushing lube fittings (55) on top of oscillation hub. Lube until excess grease in seen.

14. Install parking brake disc protective guard (if fitted) and secure with bolts, washers and nuts. Torque tighten nuts to 73 Nm (54 lbf ft).

15. Start engine, raise body, lower body safety prop and lower body.

16. Remove wheel blocks.

SPECIAL TOOLS

Refer to Section 300-0070, SERVICE TOOLS, for part numbers of the thrust nut tool and general service tools and adhesives required for procedures outlined in this section. These tools and adhesives are available from your dealer.

Product: 2005 TEREX TA40 OCDB-ZF Dump Truck Service Repair Workshop Manual
Full Download: https://www.arepairmanual.com/downloads/2005-terex-ta40-ocdb-zf-dump-truck-service-repair-workshop-manual/

SPECIAL TORQUE SPECIFICATIONS				
			TORQUE	
FIG. No.	ITEM No.	ITEM NAME	Nm	lbf ft
1	19	Nut (to seat bearing only)	250	180
1	22	Bolt	94	69
1	42	Nut	1 425	1 050
1	46 & 47	Bolt	94	68
1	48	Bolt	73	54
-	-	Parking Brake Disc Bolts	73	54
-	-	Parking Brake Brkt Mounting Nuts	680	490
-	-	Driveline Mounting Capscrews	153	113
-	-	Protective Guard Mounting Nuts	73	54
-	-	Steering Cylinder Pin Bolts	73	54

* * * *

Sample of manual. Download All 476 pages at:
https://www.arepairmanual.com/downloads/2005-terex-ta40-ocdb-zf-dump-truck-service-repair-workshop-manual/