Product: New Holland E215B/E215BLC Crawler Excavator Service Repair Manual
Full Download: https://www.arepairmanual.com/downloads/new-holland-e215b-e215blc-crawler-excavator-service-repair-manual/

SHOP MANUAL model E215B E215BLC (HS Engine)

INDEX

1	SPECIFICATIONS SECTION
2	MAINTENANCE SECTION
3	SYSTEM SECTION
4	DISASSEMBLY SECTION
5	TROUBLESHOOTING
6	ENGINE SECTION
7	PROCEDURE OF INSTALLING OPTIONS SECTION

Sample of manual. Download All 992 pages at:
https://www.arepairmanual.com/downloads/new-holland-e215b-e215blc-crawler-excavator-service-repair-manual/

HYDRAULIC EXCAVATOR

SHOP MANUAL model E215B E215BLC (HS Engine)

INDEX

1 SPECIFICATIONS SECTION
2 MAINTENANCE SECTION
3 SYSTEM SECTION
4 DISASSEMBLY SECTION
5 TROUBLESHOOTING
6 ENGINE SECTION
7 PROCEDURE OF INSTALLING OPTIONS SECTION

SPECIFICATIONS
MAINTENANCE
SYSTEM
DISASSEMBLING
TROUBLESHOOTING
E/G
OPT.

NEW HOLLAND
Book Code No. 87731203
0-1

Product: New Holland E215B/E215BLC Crawler Excavator Service Repair Manual
Full Download: https://www.arepairmanual.com/downloads/new-holland-e215b-e215blc-crawler-excavator-service-repair-manual/

WARNING

Do not operate or perform any maintenance on this machine until all instructions found in the OPERATOR'S MANUAL and this MANUAL have been thoroughly read and understood.
Improper operation or maintenance of this machine may cause accidents and could result in serious injury or death.
Always keep the manual in storage.
If it is missing or damaged, place an order with an authorized our Distributor for a replacement.
If you have any questions, please consult an authorized our Distributor.

(1) Most accidents, which occur during operation, are due to neglect of precautionary measures and safety rules. Sufficient care should be taken to avoid these accidents. Erroneous operation, lubrication or maintenance services are very dangerous and may cause injury or death of personnel. Therefore all precautionary measures, NOTES, DANGERS, WARNINGS and CAUTIONS contained in the manual and on the machine should be read and understood by all personnel before starting any work with or on the machine.

(2) Operation, inspection, and maintenance should be carefully carried out, and safety must be given the first priority. Messages of safety are indicated with marks. The safety information contained in the manual is intended only to supplement safety codes, insurance requirements, local laws, rules and regulations.

(3) Messages of safety appear in the manual and on the machine : All messages of safety are identified by either word of "DANGER", "WARNING" and "CAUTION".

1) **DANGER-** Indicates an imminently hazardous situation which, if not avoided, will result in death or serious injury and is represented as follows:

DANGER

2) **WARNING-** Indicates a potentially hazardous situation which, if not avoided, could result in death or serious injury and is represented as follows:

WARNING

3) **CAUTION-** Indicates a potentially hazardous situation which, if not avoided, may result in minor or moderate injury. It may also be used to alert against possible damage to the machine and its components and is represented as follows:

CAUTION

(4) It is very difficult to forecast every danger that may occur during operation. However, safety can be ensured by fully understanding proper operating procedures for this machine according to methods recommended by Manufacturer.

(5) While operating the machine, be sure to perform work with great care, so as not to damage the machine, or allow accidents to occur.

(6) Continue studying the manual until all Safety, Operation and Maintenance procedures are completely understood by all persons working with the machine.

Sample of manual. Download All 992 pages at:
https://www.arepairmanual.com/downloads/new-holland-e215b-e215blc-crawler-excavator-service-repair-manual/

GENERAL SAFETY INFORMATION

WARNING

Do not operate or perform any maintenance on this machine until all instructions found in the OPERATOR'S MANUAL and this MANUAL have been thoroughly read and understood.
Improper operation or maintenance of this machine may cause accidents and could result in serious injury or death.
Always keep the manual in storage.
If it is missing or damaged, place an order with an authorized our Distributor for a replacement.
If you have any questions, please consult an authorized our Distributor.

(1) Most accidents, which occur during operation, are due to neglect of precautionary measures and safety rules. Sufficient care should be taken to avoid these accidents. Erroneous operation, lubrication or maintenance services are very dangerous and may cause injury or death of personnel. Therefore all precautionary measures, NOTES, DANGERS, WARNINGS and CAUTIONS contained in the manual and on the machine should be read and understood by all personnel before starting any work with or on the machine.

(2) Operation, inspection, and maintenance should be carefully carried out, and safety must be given the first priority. Messages of safety are indicated with marks. The safety information contained in the manual is intended only to supplement safety codes, insurance requirements, local laws, rules and regulations.

(3) Messages of safety appear in the manual and on the machine : All messages of safety are identified by either word of "DANGER", "WARNING" and "CAUTION".

1) **DANGER-** Indicates an imminently hazardous situation which, if not avoided, will result in death or serious injury and is represented as follows:

DANGER

2) **WARNING-** Indicates a potentially hazardous situation which, if not avoided, could result in death or serious injury and is represented as follows:

WARNING

3) **CAUTION-** Indicates a potentially hazardous situation which, if not avoided, may result in minor or moderate injury. It may also be used to alert against possible damage to the machine and its components and is represented as follows:

CAUTION

(4) It is very difficult to forecast every danger that may occur during operation. However, safety can be ensured by fully understanding proper operating procedures for this machine according to methods recommended by Manufacturer.

(5) While operating the machine, be sure to perform work with great care, so as not to damage the machine, or allow accidents to occur.

(6) Continue studying the manual until all Safety, Operation and Maintenance procedures are completely understood by all persons working with the machine.

WARNING

The proper and safe lubrication and maintenance for this machine, recommended by Manufacturer, are outlined in the OPERATOR'S MANUAL for the machine.
Improper performance of lubrication or maintenance procedures are dangerous and could result in injury or death. Read and understand the MANUAL before performing any lubrication or maintenance.

The serviceman or mechanic may be unfamiliar with many of the systems on this machine. This makes it important to use caution when performing service work. A knowledge of the system and or components is important before the removal or disassembly of any component.

Because of the size of some of the machine components, the serviceman or mechanic should check the weights noted in this manual. Use proper lifting procedures when removing any components. Weight of components table is shown in the section ; SPECIFICATIONS.

The following is a list of basic precautions that must always be observed.

(1) Read and understand all Warning plates and decal on the machine before Operating, Maintaining or Repairing this machine.

(2) Always wear protective glasses and protective shoes when working around machines. In particular, wear protective glasses when using hammers, punches or drifts on any part of the machine or attachments. Use welders gloves, hood/goggles, apron and the protective clothing appropriate to the welding job being performed. Do not wear loose fitting or torn clothing. Remove all rings from fingers, loose jewelry, confine long hair and loose clothing before working on this machinery.

(3) Disconnect the battery and hang a "Do Not Operate" tag in the Operators Compartment. Remove ignition keys.

(4) If possible, make all repairs with the machine parked on a firm level surface. Block the machine so it does not roll while working on or under the machine. Hang a "Do Not Operate" tag in the Operators Compartment.

(5) Do not work on any machine that is supported only by lift, jacks or a hoist. Always use blocks or jack stands, capable of supporting the machine, before performing any disassembly.

WARNING

Do not operate this machine unless you have read and understand the instructions in the OPERATOR'S MANUAL. Improper machine operation is dangerous and could result in injury or death.

(6) Relieve all pressure in air, oil or water systems before any lines, fittings or related items are disconnected or removed. Always make sure all raised components are blocked correctly and be alert for possible pressure when disconnecting any device from a system that utilizes pressure.

(7) Lower the bucket, dozer, or other attachments to the ground before performing any work on the machine. If this cannot be done, make sure the bucket, dozer, ripper or other attachment is blocked correctly to prevent it from dropping unexpectedly.

(8) Use steps and grab handles when mounting or dismounting a machine. Clean any mud or debris from steps, walkways or work platforms before using. Always face to the machine when using steps, ladders and walkways. When it is not possible to use the designed access system, provide ladders, scaffolds, or work platforms to perform safe repair operations.

(9) To avoid back injury, use a hoist when lifting components which weigh 20kg (45lbs) or more. Make sure all chains, hooks, slings, etc., are in good condition and are the correct capacity. Be sure hooks are positioned correctly. Lifting eyes are not to be side loaded during a lifting operation.

(10) To avoid burns, be alert for hot parts on machines which have just been stopped and hot fluids in lines, tubes and compartments.

(11) Be careful when removing cover plates. Gradually back off the last two capscrews or nuts located at opposite ends of the cover or device and carefully pry cover loose to relieve any spring or other pressure, before removing the last two capscrews or nuts completely.

(12) Be careful when removing filler caps, breathers and plugs on the machine. Hold a rag over the cap or plug to prevent being sprayed or splashed by liquids under pressure. The danger is even greater if the machine has just been stopped because fluids can be hot.

SAFETY PRECAUTIONS

WARNING

The proper and safe lubrication and maintenance for this machine, recommended by Manufacturer, are outlined in the OPERATOR'S MANUAL for the machine.
Improper performance of lubrication or maintenance procedures are dangerous and could result in injury or death. Read and understand the MANUAL before performing any lubrication or maintenance.

The serviceman or mechanic may be unfamiliar with many of the systems on this machine. This makes it important to use caution when performing service work. A knowledge of the system and or components is important before the removal or disassembly of any component.

Because of the size of some of the machine components, the serviceman or mechanic should check the weights noted in this manual. Use proper lifting procedures when removing any components. Weight of components table is shown in the section ; SPECIFICATIONS.

The following is a list of basic precautions that must always be observed.

(1) Read and understand all Warning plates and decal on the machine before Operating, Maintaining or Repairing this machine.

(2) Always wear protective glasses and protective shoes when working around machines. In particular, wear protective glasses when using hammers, punches or drifts on any part of the machine or attachments. Use welders gloves, hood/goggles, apron and the protective clothing appropriate to the welding job being performed. Do not wear loose fitting or torn clothing. Remove all rings from fingers, loose jewelry, confine long hair and loose clothing before working on this machinery.

(3) Disconnect the battery and hang a "Do Not Operate" tag in the Operators Compartment. Remove ignition keys.

(4) If possible, make all repairs with the machine parked on a firm level surface. Block the machine so it does not roll while working on or under the machine. Hang a "Do Not Operate" tag in the Operators Compartment.

(5) Do not work on any machine that is supported only by lift, jacks or a hoist. Always use blocks or jack stands, capable of supporting the machine, before performing any disassembly.

WARNING

Do not operate this machine unless you have read and understand the instructions in the OPERATOR'S MANUAL. Improper machine operation is dangerous and could result in injury or death.

(6) Relieve all pressure in air, oil or water systems before any lines, fittings or related items are disconnected or removed. Always make sure all raised components are blocked correctly and be alert for possible pressure when disconnecting any device from a system that utilizes pressure.

(7) Lower the bucket, dozer, or other attachments to the ground before performing any work on the machine. If this cannot be done, make sure the bucket, dozer, ripper or other attachment is blocked correctly to prevent it from dropping unexpectedly.

(8) Use steps and grab handles when mounting or dismounting a machine. Clean any mud or debris from steps, walkways or work platforms before using. Always face to the machine when using steps, ladders and walkways. When it is not possible to use the designed access system, provide ladders, scaffolds, or work platforms to perform safe repair operations.

(9) To avoid back injury, use a hoist when lifting components which weigh 20kg (45lbs) or more. Make sure all chains, hooks, slings, etc., are in good condition and are the correct capacity. Be sure hooks are positioned correctly. Lifting eyes are not to be side loaded during a lifting operation.

(10) To avoid burns, be alert for hot parts on machines which have just been stopped and hot fluids in lines, tubes and compartments.

(11) Be careful when removing cover plates. Gradually back off the last two capscrews or nuts located at opposite ends of the cover or device and carefully pry cover loose to relieve any spring or other pressure, before removing the last two capscrews or nuts completely.

(12) Be careful when removing filler caps, breathers and plugs on the machine. Hold a rag over the cap or plug to prevent being sprayed or splashed by liquids under pressure. The danger is even greater if the machine has just been stopped because fluids can be hot.

0-3

(13)Always use the proper tools that are in good condition and that are suited for the job at hand. Be sure you understand how to use them before performing any service work.

(14)Reinstall all fasteners with the same part number. Do not use a lesser quality fastener if replacements are necessary.

(15)Repairs which require welding should be performed only with the benefit of the appropriate reference information and by personnel adequately trained and knowledgeable in welding procedures. Determine type of metal being welded and select correct welding procedure and electrodes, rods or wire to provide a weld metal strength equivalent at least to that of the parent metal. Make sure to disconnect battery before any welding procedures are attempted.

(16)Do not damage wiring during removal operations. Reinstall the wiring so it is not damaged nor will be damaged in operation of the machine by contacting sharp corners, or by rubbing against some object or hot surface. Do not connect wiring to a line containing fluid.

(17)Be sure all protective devices including guards and shields are properly installed and functioning correctly before starting a repair. If a guard or shield must be removed to perform the repair work, use extra caution and replace the guard or shield after repair is completed.

(18)The maintenance and repair work while holding the bucket raised is dangerous due to the possibility of a falling attachment. Don't fail to lower the attachment and place the bucket to the ground before starting the work.

(19)Loose or damaged fuel, lubricant and hydraulic lines, tubes and hoses can cause fires. Do not bend or strike high pressure lines or install ones which have been bent or damaged. Inspect lines, tubes and hoses carefully. Do not check for leaks with your hands. Very small (pinhole) leaks can result in a high velocity oil stream that will be invisible close to the hose. This oil can penetrate the skin and cause personal injury. Use card-board or paper to locate pinhole leaks.

(20)Tighten connections to the correct torque. Make sure that all heat shields, clamps and guards are installed correctly to avoid excessive heat, vibration or rubbing against other parts during operation. Shields that protect against oil spray onto hot exhaust components in event of a line, tube or seal failure must be installed correctly.

(21)Do not operate a machine if any rotating part is damaged or contacts any other part during operation. Any high speed rotating component that has been damaged or altered should be checked for balance before reusing.

(22)Be careful when servicing or separating the tracks (crawlers). Chips can fly when removing or installing a track (crawlers) pin. Wear safety glasses and long sleeve protective clothing. Tracks (crawlers) can unroll very quickly when separated. Keep away from front and rear of machine. The machine can move unexpectedly when both tracks (crawlers) are disengaged from the sprockets. Block the machine to prevent it from moving.

(13)Always use the proper tools that are in good condition and that are suited for the job at hand. Be sure you understand how to use them before performing any service work.

(14)Reinstall all fasteners with the same part number. Do not use a lesser quality fastener if replacements are necessary.

(15)Repairs which require welding should be performed only with the benefit of the appropriate reference information and by personnel adequately trained and knowledgeable in welding procedures. Determine type of metal being welded and select correct welding procedure and electrodes, rods or wire to provide a weld metal strength equivalent at least to that of the parent metal. Make sure to disconnect battery before any welding procedures are attempted.

(16)Do not damage wiring during removal operations. Reinstall the wiring so it is not damaged nor will be damaged in operation of the machine by contacting sharp corners, or by rubbing against some object or hot surface. Do not connect wiring to a line containing fluid.

(17)Be sure all protective devices including guards and shields are properly installed and functioning correctly before starting a repair. If a guard or shield must be removed to perform the repair work, use extra caution and replace the guard or shield after repair is completed.

(18)The maintenance and repair work while holding the bucket raised is dangerous due to the possibility of a falling attachment. Don't fail to lower the attachment and place the bucket to the ground before starting the work.

(19)Loose or damaged fuel, lubricant and hydraulic lines, tubes and hoses can cause fires. Do not bend or strike high pressure lines or install ones which have been bent or damaged. Inspect lines, tubes and hoses carefully. Do not check for leaks with your hands. Very small (pinhole) leaks can result in a high velocity oil stream that will be invisible close to the hose. This oil can penetrate the skin and cause personal injury. Use card-board or paper to locate pinhole leaks.

(20)Tighten connections to the correct torque. Make sure that all heat shields, clamps and guards are installed correctly to avoid excessive heat, vibration or rubbing against other parts during operation. Shields that protect against oil spray onto hot exhaust components in event of a line, tube or seal failure must be installed correctly.

(21)Do not operate a machine if any rotating part is damaged or contacts any other part during operation. Any high speed rotating component that has been damaged or altered should be checked for balance before reusing.

(22)Be careful when servicing or separating the tracks (crawlers). Chips can fly when removing or installing a track (crawlers) pin. Wear safety glasses and long sleeve protective clothing. Tracks (crawlers) can unroll very quickly when separated. Keep away from front and rear of machine. The machine can move unexpectedly when both tracks (crawlers) are disengaged from the sprockets. Block the machine to prevent it from moving.

0-4

INDEX

Book Code No. / Distribution Year–Month				Title	Index No.
S5YN0118E01 2007-7			SPECIFICATIONS	OUTLINE	1
S5YN0225E01 2007-7				SPECIFICATIONS	2
S5YN0322E01 2007-7				ATTACHMENT DIMENSIONS	3
S5YN1122E01 2007-7			MAINTENANCE	TOOLS	11
S5YN1221E01 2007-7				STANDARD MAINTENANCE TIME SCHEDULE	12
S5YN1318E02 2007-7				MAINTENANCE STANDARD AND TEST PROCEDURE	13
S5YN2122E01 2007-7			SYSTEM	MECHATRO CONTROL SYSTEM	21
S5YN2223E01 2007-7				HYDRAULIC SYSTEM	22
S5YN2325E01 2007-7				ELECTRIC SYSTEM	23
S5YN2425E01 2007-7				COMPONENTS SYSTEM	24
S5YN2518E02 2007-7				AIR-CONDITIONER SYSTEM	25
——					
S5YN3118E01 2007-7			DISASSEMBLING	DISASSEMBLING & ASSEMBLING	31
S5YN3218E02 2007-7				ATTACHMENT	32
S5YN3325E01 2007-7				UPPER STRUCTURE	33
S5YN3421E01 2007-7				TRAVEL SYSTEM	34
S5YN4618E02 2007-7			TROUBLESHOOTING	BY ERROR CODES	46
S5YN4718E01 2007-7				BY TROUBLE	47
S5YN4818E01 2007-7				TROUBLE DIAGNOSIS MODE	48
——					
S5YN5123E01 2007-7			E/G	ENGINE	51
——					
——					
——					
YN11-45001~ YQ11-06001~				APPLICABLE MACHINES	

NHK Russia (HS Engine)

INDEX

E215B
E215BLC

Book Code No. / Distribution Year–Month				Title	Index No.
S5YN0118E01 2007-7			SPECIFICATIONS	OUTLINE	1
S5YN0225E01 2007-7				SPECIFICATIONS	2
S5YN0322E01 2007-7				ATTACHMENT DIMENSIONS	3
S5YN1122E01 2007-7			MAINTENANCE	TOOLS	11
S5YN1221E01 2007-7				STANDARD MAINTENANCE TIME SCHEDULE	12
S5YN1318E02 2007-7				MAINTENANCE STANDARD AND TEST PROCEDURE	13
S5YN2122E01 2007-7			SYSTEM	MECHATRO CONTROL SYSTEM	21
S5YN2223E01 2007-7				HYDRAULIC SYSTEM	22
S5YN2325E01 2007-7				ELECTRIC SYSTEM	23
S5YN2425E01 2007-7				COMPONENTS SYSTEM	24
S5YN2518E02 2007-7				AIR-CONDITIONER SYSTEM	25
——					
S5YN3118E01 2007-7			DISASSEMBLING	DISASSEMBLING & ASSEMBLING	31
S5YN3218E02 2007-7				ATTACHMENT	32
S5YN3325E01 2007-7				UPPER STRUCTURE	33
S5YN3421E01 2007-7				TRAVEL SYSTEM	34
S5YN4618E02 2007-7			TROUBLESHOOTING	BY ERROR CODES	46
S5YN4718E01 2007-7				BY TROUBLE	47
S5YN4818E01 2007-7				TROUBLE DIAGNOSIS MODE	48
——					
S5YN5123E01 2007-7			E/G	ENGINE	51
——					
——					
——					
YN11-45001~ YQ11-06001~				APPLICABLE MACHINES	

0-5

NOTE:

This Manual is prepared as a technical material in which the information necessary for the maintenance and repairing services of our hydraulic excavators are collected, and is categorized into 7 Chapters, Specification, Maintenance, System, Disassembly, Troubleshooting, Engine, and Installation Procedures for Optional Attachment.

- The Chapter "Specification" describes the specifications for entire machine and material, which are instructive for replacement and repairing of attachments.
- The Chapter "Maintenance" describes the material, which is helpful for maintenance service and adjustments for entire machine.
- The Chapter "System" describes the operating system like hydraulic system, electric system, components, and so on.
- The Chapter "Disassembly" describes the removal and installing of assembly mounted on the upper structure and undercarriage, and the assembling and disassembling of the associated hydraulic equipment.
- The Chapter "Troubleshooting" describes how to find the fault equipment.
- The Chapter "Engine" describes the engines making use of the "Maintenance Manual" provided by the suppliers.
- The Chapter "Installation Procedures for Optional Attachment" describes the supplements added on request as required.

This Manual may be properly revised due to the improvement of products, modification of specifications, etc. And there are cases where the system on actual machine and a part of the contents of this manual may differ due to the variations of specification by countries. For the section in which the description is hardly understood, contact our distributor.

The number is assigned to every part handled in this Manual on account of the description, but the parts, which cannot be supplied as service parts are contained. Therefore, the order must be placed with respective formal number with due confirmation on the Parts Manual for applicable machine.

NOTE:

This Manual is prepared as a technical material in which the information necessary for the maintenance and repairing services of our hydraulic excavators are collected, and is categorized into 7 Chapters, Specification, Maintenance, System, Disassembly, Troubleshooting, Engine, and Installation Procedures for Optional Attachment.

- The Chapter "Specification" describes the specifications for entire machine and material, which are instructive for replacement and repairing of attachments.
- The Chapter "Maintenance" describes the material, which is helpful for maintenance service and adjustments for entire machine.
- The Chapter "System" describes the operating system like hydraulic system, electric system, components, and so on.
- The Chapter "Disassembly" describes the removal and installing of assembly mounted on the upper structure and undercarriage, and the assembling and disassembling of the associated hydraulic equipment.
- The Chapter "Troubleshooting" describes how to find the fault equipment.
- The Chapter "Engine" describes the engines making use of the "Maintenance Manual" provided by the suppliers.
- The Chapter "Installation Procedures for Optional Attachment" describes the supplements added on request as required.

This Manual may be properly revised due to the improvement of products, modification of specifications, etc. And there are cases where the system on actual machine and a part of the contents of this manual may differ due to the variations of specification by countries. For the section in which the description is hardly understood, contact our distributor.

The number is assigned to every part handled in this Manual on account of the description, but the parts, which cannot be supplied as service parts are contained. Therefore, the order must be placed with respective formal number with due confirmation on the Parts Manual for applicable machine.

0-6

1. OUTLINE

TABLE OF CONTENTS

1.1 GENERAL PRECAUTIONS FOR MAKING REPAIRS 1-3
1.1.1 PREPARATION BEFORE DISASSEMBLING 1-3
1.1.2 SAFETY WHEN DISASSEMBLING AND ASSEMBLING 1-3
1.1.3 DISASSEMBLING AND ASSEMBLING HYDRAULIC EQUIPMENT 1-3
1.1.4 ELECTRICAL EQUIPMENT 1-4
1.1.5 HYDRAULIC PARTS 1-5
1.1.6 WELD REPAIR 1-5
1.1.7 ENVIRONMENTAL ISSUES 1-5
1.2 INTERNATIONAL UNIT SYSTEM 1-6

1

1. OUTLINE

TABLE OF CONTENTS

1.1 GENERAL PRECAUTIONS FOR MAKING REPAIRS 1-3
1.1.1 PREPARATION BEFORE DISASSEMBLING 1-3
1.1.2 SAFETY WHEN DISASSEMBLING AND ASSEMBLING 1-3
1.1.3 DISASSEMBLING AND ASSEMBLING HYDRAULIC EQUIPMENT 1-3
1.1.4 ELECTRICAL EQUIPMENT 1-4
1.1.5 HYDRAULIC PARTS 1-5
1.1.6 WELD REPAIR 1-5
1.1.7 ENVIRONMENTAL ISSUES 1-5
1.2 INTERNATIONAL UNIT SYSTEM 1-6

Book Code No. **S5YN0118E01**

1-1

Issue	Date of Issue	Applicable Machines	Remarks
First edition	July, 2006	SK330-8 : LC10-07001~ SK350LC-8 : YC10-03501~	S5YN0118E01 (ASIA, OCE) K
↑	August, 2006	SK200-8 : YN11-45001~ SK210LC-8 : YQ11-06001~	↑ (ASIA, OCE) K
↑	October, 2006	SK250-8: LQ12-06001~ SK260LC–8 : LL12-05001~	↑ (ASIA, OCE) K
↑	December, 2006	SK850LC: LY01-00101~	↑ K
↑	February, 2007	E235BSR : YF05-02001~ E235BSR(N)LC : YU05-02001~	↑ (NHK) K
↑	↑	SK235SRLC-2 : YU05-02001~	↑ (North America) K
↑	March, 2007	E215B : YN11-45001~ E215BLC : YQ11-06001~	↑ (NHK Russia) K
↑	April, 2007	SK235SR-2 : YF05-02001~ SK235SRLC-2 : YU05-02001~	↑ (OCE) K
↑	↑	SK200-8 : YN11-45001~ SK210LC-8 : YQ11-06001~	↑ ASIA (HS Engine) K
↑	May, 2007	SK250-8: LQ12-06001~ SK260LC–8 : LL12-05001~	↑ ASIA (HS Engine) K
↑	June, 2007	E225BSR : YB05-03001~ E225BSRLC : LA05-02001~	↑ (NHK) K
↑	↑	SK215SRLC : LA05-02001~	↑ (North America) K
↑	July, 2007	E135BSR : YY05-12001~ E135BSRLC : YH05-07001~	↑ (NHK) K
↑	↑	SK225SR : YB05-03001~ SK225SRLC : LA05-02001~	↑ (OCE) K
↑	↑	SK460-8: LS10-02001~ SK480LC–8 : YS10-01501~	↑ (ASIA, OCE) K
↑	↑	E215B : YN11-45001~ E215BLC : YQ11-06001~	↑ (NHK Middle East) K
↑	↑	E265B : LQ12-06001~ E265BLC : LL12-05001~	↑ (NHK Russia) K
↑	↑	E215B : YN11-45001~ E215BLC : YQ11-06001~	↑ (NHK Russia) HS Engine K
↑	↑	↑	↑ (NHK Middle East) HS Engine K
↑	August, 2007	E385B : LC10-07001~ E385BLC : YC10-03501~	↑ (NHK Middle East) K

1. OUTLINE

Issue	Date of Issue	Applicable Machines	Remarks
First edition	July, 2006	SK330-8 : LC10-07001~ SK350LC-8 : YC10-03501~	S5YN0118E01 (ASIA, OCE) K
↑	August, 2006	SK200-8 : YN11-45001~ SK210LC-8 : YQ11-06001~	↑ (ASIA, OCE) K
↑	October, 2006	SK250-8: LQ12-06001~ SK260LC–8 : LL12-05001~	↑ (ASIA, OCE) K
↑	December, 2006	SK850LC: LY01-00101~	↑ K
↑	February, 2007	E235BSR : YF05-02001~ E235BSR(N)LC : YU05-02001~	↑ (NHK) K
↑	↑	SK235SRLC-2 : YU05-02001~	↑ (North America) K
↑	March, 2007	E215B : YN11-45001~ E215BLC : YQ11-06001~	↑ (NHK Russia) K
↑	April, 2007	SK235SR-2 : YF05-02001~ SK235SRLC-2 : YU05-02001~	↑ (OCE) K
↑	↑	SK200-8 : YN11-45001~ SK210LC-8 : YQ11-06001~	↑ ASIA (HS Engine) K
↑	May, 2007	SK250-8: LQ12-06001~ SK260LC–8 : LL12-05001~	↑ ASIA (HS Engine) K
↑	June, 2007	E225BSR : YB05-03001~ E225BSRLC : LA05-02001~	↑ (NHK) K
↑	↑	SK215SRLC : LA05-02001~	↑ (North America) K
↑	July, 2007	E135BSR : YY05-12001~ E135BSRLC : YH05-07001~	↑ (NHK) K
↑	↑	SK225SR : YB05-03001~ SK225SRLC : LA05-02001~	↑ (OCE) K
↑	↑	SK460-8: LS10-02001~ SK480LC–8 : YS10-01501~	↑ (ASIA, OCE) K
↑	↑	E215B : YN11-45001~ E215BLC : YQ11-06001~	↑ (NHK Middle East) K
↑	↑	E265B : LQ12-06001~ E265BLC : LL12-05001~	↑ (NHK Russia) K
↑	↑	E215B : YN11-45001~ E215BLC : YQ11-06001~	↑ (NHK Russia) HS Engine K
↑	↑	↑	↑ (NHK Middle East) HS Engine K
↑	August, 2007	E385B : LC10-07001~ E385BLC : YC10-03501~	↑ (NHK Middle East) K

1.1 GENERAL PRECAUTIONS FOR MAKING REPAIRS

1.1.1 PREPARATION BEFORE DISASSEMBLING

(1) Knowledge of operating procedure
Read Operator's Manual carefully to understand the operating procedure.

(2) Cleaning machines
Clean machines of soil, mud, and dust before carrying into the service shop.
Carrying a soiled machine into the service shop, causes making less efficient work and damage of parts.

(3) Inspecting machines
Confirm the disassembling section before starting work, determine the disassembly procedure taking the conditions in work shop into account, and request to procure necessary parts in advance.

(4) Recording
Record the following items to keep contact and prevent malfunction from recurring.
1) Inspecting date, place
2) Model name, Serial number and Record on hour meter
3) Trouble condition, place, cause
4) Visible oil leak, water leak and damage
5) Clogging of filters, oil level, oil quality, oil contamination and looseness.
6) Examine the problems on the basis of monthly operation rate with the last inspection date and records on hour meter.

(5) Arrangement and cleaning in service shop
1) Tools required for repair work.
2) Prepare the places to put the disassembled parts.
3) Prepare oil pans for leaking oil, etc.

1.1.2 SAFETY WHEN DISASSEMBLING AND ASSEMBLING

(1) Safety
1) Wear appropriate clothing, safety shoes, safety helmet, goggles, and clothes with long sleeves.
2) Attach "Don't operate" tag to control lever, and begin a meeting before starting the work.
3) Before starting inspection and maintenance stop the engine.
4) Confirm the position of first-aid kit and fire extinguisher, and also where to make contact for emergency measure and ambulance to prepare for accidents and fire.
5) Choose a hard, lever and safe place, and put attachment on the ground without fail.
6) Use hoist, etc. to remove parts of heavy weight (23kg [50 lb] or more).
7) Use proper tools, and change or repair defective tools.
8) Machine and attachment required to work in the lifting condition should be supported with supports or blocks securely.

1.1.3 DISASSEMBLING AND ASSEMBLING HYDRAULIC EQUIPMENT

(1) Removing hydraulic equipment assy
1) Before removing pipes, release the pressure of hydraulic oil tank, or open the cover on the return side to tank, and take out the filter.
2) Drain the oil in the removed pipes into pan to prevent the oil from spilling on the ground.
3) Pipes with plugs or caps to prevent oil leaking, entry of dust, etc.
4) Clean the outside surface of equipment, etc. before disassembling, and drain hydraulic oil and gear oil before putting them on working bench.

(2) Disassembling hydraulic equipment
1) Since performance and function of hydraulic equipment after disassembly and assembly results in immunity from responsibility on the manufacture's side, disassembly, assembly and modification without permission are strictly prohibited.
2) If it is unavoidably necessary to disassemble and modify, it should be carried out by experts or personnel qualified through service training.
3) Make match mark on parts for reassembling.
4) Before disassembling, read Disassembling Instruction in advance, and determine if the disassembly and assembly are permitted or not.

1. OUTLINE

1.1 GENERAL PRECAUTIONS FOR MAKING REPAIRS

1.1.1 PREPARATION BEFORE DISASSEMBLING

Read Operator's Manual before disassembling

(1) Knowledge of operating procedure
Read Operator's Manual carefully to understand the operating procedure.

(2) Cleaning machines
Clean machines of soil, mud, and dust before carrying into the service shop.
Carrying a soiled machine into the service shop, causes making less efficient work and damage of parts.

(3) Inspecting machines
Confirm the disassembling section before starting work, determine the disassembly procedure taking the conditions in work shop into account, and request to procure necessary parts in advance.

(4) Recording
Record the following items to keep contact and prevent malfunction from recurring.
1) Inspecting date, place
2) Model name, Serial number and Record on hour meter
3) Trouble condition, place, cause
4) Visible oil leak, water leak and damage
5) Clogging of filters, oil level, oil quality, oil contamination and looseness.
6) Examine the problems on the basis of monthly operation rate with the last inspection date and records on hour meter.

(5) Arrangement and cleaning in service shop
1) Tools required for repair work.
2) Prepare the places to put the disassembled parts.
3) Prepare oil pans for leaking oil, etc.

1.1.2 SAFETY WHEN DISASSEMBLING AND ASSEMBLING

WARNING

(1) Safety
1) Wear appropriate clothing, safety shoes, safety helmet, goggles, and clothes with long sleeves.
2) Attach "Don't operate" tag to control lever, and begin a meeting before starting the work.
3) Before starting inspection and maintenance stop the engine.
4) Confirm the position of first-aid kit and fire extinguisher, and also where to make contact for emergency measure and ambulance to prepare for accidents and fire.
5) Choose a hard, lever and safe place, and put attachment on the ground without fail.
6) Use hoist, etc. to remove parts of heavy weight (23kg [50 lb] or more).
7) Use proper tools, and change or repair defective tools.
8) Machine and attachment required to work in the lifting condition should be supported with supports or blocks securely.

1.1.3 DISASSEMBLING AND ASSEMBLING HYDRAULIC EQUIPMENT

(1) Removing hydraulic equipment assy
1) Before removing pipes, release the pressure of hydraulic oil tank, or open the cover on the return side to tank, and take out the filter.
2) Drain the oil in the removed pipes into pan to prevent the oil from spilling on the ground.
3) Pipes with plugs or caps to prevent oil leaking, entry of dust, etc.
4) Clean the outside surface of equipment, etc. before disassembling, and drain hydraulic oil and gear oil before putting them on working bench.

(2) Disassembling hydraulic equipment
1) Since performance and function of hydraulic equipment after disassembly and assembly results in immunity from responsibility on the manufacture's side, disassembly, assembly and modification without permission are strictly prohibited.
2) If it is unavoidably necessary to disassemble and modify, it should be carried out by experts or personnel qualified through service training.
3) Make match mark on parts for reassembling.
4) Before disassembling, read Disassembling Instruction in advance, and determine if the disassembly and assembly are permitted or not.

1-3

5) For parts which are required to use jig and tools, don't fail to use the specified jig and tools.
6) For parts which can not be removed in the specified procedure, never force removal. First check for the cause.
7) The removed parts should be put in order and tagged so as to install on proper places without confusion.
8) For common parts, pay attention to the quantity and places.

(3) Inspecting parts
1) Check that the disassembled parts are free from adherence, interference and uneven working face.
2) Measure the wear of parts and clearance, and record the measured values.
3) If an abnormality is detected, repair or replace the parts.

(4) Reassembling hydraulic equipment
1) During the parts cleaning, ventilate the room.
2) Before assembly, clean parts roughly first, and then completely.
3) Remove adhering oil by compressed air, and apply hydraulic oil or gear oil, and then assemble them.
4) Replace the removed O-ring, back-up rings and oil seal with new ones, and apply grease oil on them before assembling.
5) Removes dirt and water on the surface on which liquid sealant are applied, decrease them, and apply liquid sealant on them.
6) Before assembling, remove rust preventives on new parts.
7) Use special tools to fit bearings, bushing and oil seal.
8) Assemble parts matching to the marks.
9) After completion, check that there is no omission of parts.

(5) Installing hydraulic equipment
1) Confirm hydraulic oil and lubrication oil.
2) Air release is required in the following cases ;
1. Change of hydraulic oil
2. Replacement of parts on suction pipe side
3. Removing and attaching hydraulic pump
4. Removing and attaching swing motor
5. Removing and attaching travel motor
6. Removing and attaching hydraulic cylinder

WARNING

If hydraulic oil and lubricating oil are not filled and also air bleed is not performed, the hydraulic equipment may be damaged.

3) For air bleed of hydraulic pump and swing motor, loosen drain plug on the upper part, start engine, and run in low idling, then bleed air until hydraulic oil is comes out. After completion of comes, tighten plug securely.
4) For air bleed of travel motor and hydraulic cylinder, starts engine and operate it for 10 minutes or more at no-load and low speed.

WARNING

For cylinder, don't move it to the stroke end at beginning.

5) Air in pilot circuit can be bleed out by only operating digging, swing and traveling motions thoroughly.
6) Check hydraulic oil level.
Move attachments to hydraulic oil check position, and check hydraulic oil level of tank.
Refill oil if the oil level is lower than the specified level.
How to check oil level of hydraulic oil tank

Important imformation

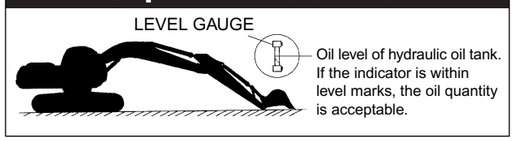

1.1.4 ELECTRICAL EQUIPMENT

(1) The disassembly of electrical equipment is not allowed.
(2) Handle equipment with care so as not to drop it or bump it.
(3) Connector should be removed by unlocking while holding the connector.
Never stress in tension to the caulked section by pulling wire.
(4) Check that connector is connected and locked completely.
(5) Engine key off before removing and connecting connector.

1. OUTLINE

5) For parts which are required to use jig and tools, don't fail to use the specified jig and tools.
6) For parts which can not be removed in the specified procedure, never force removal. First check for the cause.
7) The removed parts should be put in order and tagged so as to install on proper places without confusion.
8) For common parts, pay attention to the quantity and places.

(3) Inspecting parts
1) Check that the disassembled parts are free from adherence, interference and uneven working face.
2) Measure the wear of parts and clearance, and record the measured values.
3) If an abnormality is detected, repair or replace the parts.

(4) Reassembling hydraulic equipment
1) During the parts cleaning, ventilate the room.
2) Before assembly, clean parts roughly first, and then completely.
3) Remove adhering oil by compressed air, and apply hydraulic oil or gear oil, and then assemble them.
4) Replace the removed O-ring, back-up rings and oil seal with new ones, and apply grease oil on them before assembling.
5) Removes dirt and water on the surface on which liquid sealant are applied, decrease them, and apply liquid sealant on them.
6) Before assembling, remove rust preventives on new parts.
7) Use special tools to fit bearings, bushing and oil seal.
8) Assemble parts matching to the marks.
9) After completion, check that there is no omission of parts.

(5) Installing hydraulic equipment
1) Confirm hydraulic oil and lubrication oil.
2) Air release is required in the following cases ;
1. Change of hydraulic oil
2. Replacement of parts on suction pipe side
3. Removing and attaching hydraulic pump
4. Removing and attaching swing motor
5. Removing and attaching travel motor
6. Removing and attaching hydraulic cylinder

WARNING

If hydraulic oil and lubricating oil are not filled and also air bleed is not performed, the hydraulic equipment may be damaged.

3) For air bleed of hydraulic pump and swing motor, loosen drain plug on the upper part, start engine, and run in low idling, then bleed air until hydraulic oil is comes out. After completion of comes, tighten plug securely.
4) For air bleed of travel motor and hydraulic cylinder, starts engine and operate it for 10 minutes or more at no-load and low speed.

WARNING

For cylinder, don't move it to the stroke end at beginning.

5) Air in pilot circuit can be bleed out by only operating digging, swing and traveling motions thoroughly.
6) Check hydraulic oil level.
Move attachments to hydraulic oil check position, and check hydraulic oil level of tank.
Refill oil if the oil level is lower than the specified level.
How to check oil level of hydraulic oil tank

Important imformation

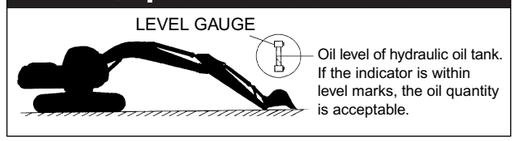

1.1.4 ELECTRICAL EQUIPMENT

(1) The disassembly of electrical equipment is not allowed.
(2) Handle equipment with care so as not to drop it or bump it.
(3) Connector should be removed by unlocking while holding the connector.
Never stress in tension to the caulked section by pulling wire.
(4) Check that connector is connected and locked completely.
(5) Engine key off before removing and connecting connector.

1-4

(6) Engine key off before touching terminals of starter and alternator.

(7) Remove battery grounding terminal before beginning work close to battery and battery relay with tools.

(8) Wash machine with care so as not to splash water on electrical equipment and connector.

(9) When water has entered in the waterproofed connector, the removing of water is not easy. So check the removed waterproofed connector with care to protect it from entry of water. If moisture adheres on it, dry it completely before connecting.

WARNING

Battery fluid is dangerous.
The battery fluid is dilute sulfuric acid, and causes scald and loss of eyesight by adhering on eyes, skin and clothes. When the fluid has adhered on them, take an emergency measure immediately and see a doctor for medical advice.

- **When it has adhered on skin ;**
  Wash with soap and water.
- **When it has got in eyes ;**
  Wash in water for 10 minutes or more immediately.
- **When it has spilled out in large quantity ;**
  Use sodium bicarbonate to neutralize, or wash away with water.
- **When it was swallowed ;**
  Drink milk or water.
- **When it has adhered on clothes ;**
  Wash it immediately.

1.1.5 HYDRAULIC PARTS

(1) O-ring
- Check that O-ring is free from flaw and has elasticity before fitting.
- Even if the size of O-ring is equal, the usage differs, for example in dynamic and static sections, the rubber hardness also differs according to the pressure force, and also the quality differs depending on the materials to be seated. So, choose proper O-ring.
- Fit O-ring so as to be free from distortion and bend.
- Floating seal should be put in pairs.

(2) Flexible hose (F hose)
- Even if the connector and length of hose are the same, the parts differ according to the withstanding pressure. Use proper parts.
- Tighten it to the specified torque, and check that it is free from twist, over tension, interference, and oil leak.

1.1.6 WELD REPAIR

(1) The weld repair should be carried out by qualified personnel in the specified procedure after disconnecting the grounding cable of battery. If the grounding cable is not disconnected, the electrical equipment may be damaged.

(2) Remove parts which may cause fire due to the entry of spark beforehand.

(3) Repair attachments which are damaged, giving particular attention to the plated section of piston rod to protect it from sparks, and don't fail to cover the section with flame-proof clothes.

1.1.7 ENVIRONMENTAL ISSUES

(1) Engine should be started and operated in the place where air can be sufficiently ventilated.

(2) Waste disposal
The following parts follows the regulation.
Waste oil, waste container and battery

(3) Precautions for handling hydraulic oil
Hydraulic oil may cause inflammation of eyes.
Wear goggles to protect eyes on handling it.
- When it has got in eyes ;
  Wash eyes with water until the stimulus is gone.
- When it was swallowed ;
  Don't force him to vomit it, but immediately receive medical treatment.
- When it has adhered on skin ;
  Wash with soap and water.

(4) Others
For spare parts, grease and oil, use KOBELCO genuine ones.

1. OUTLINE

(6) Engine key off before touching terminals of starter and alternator.

(7) Remove battery grounding terminal before beginning work close to battery and battery relay with tools.

(8) Wash machine with care so as not to splash water on electrical equipment and connector.

(9) When water has entered in the waterproofed connector, the removing of water is not easy. So check the removed waterproofed connector with care to protect it from entry of water. If moisture adheres on it, dry it completely before connecting.

WARNING

Battery fluid is dangerous.
The battery fluid is dilute sulfuric acid, and causes scald and loss of eyesight by adhering on eyes, skin and clothes. When the fluid has adhered on them, take an emergency measure immediately and see a doctor for medical advice.

- When it has adhered on skin ;
  Wash with soap and water.
- When it has got in eyes ;
  Wash in water for 10 minutes or more immediately.
- When it has spilled out in large quantity ;
  Use sodium bicarbonate to neutralize, or wash away with water.
- When it was swallowed ;
  Drink milk or water.
- When it has adhered on clothes ;
  Wash it immediately.

1.1.5 HYDRAULIC PARTS

(1) O-ring
- Check that O-ring is free from flaw and has elasticity before fitting.
- Even if the size of O-ring is equal, the usage differs, for example in dynamic and static sections, the rubber hardness also differs according to the pressure force, and also the quality differs depending on the materials to be seated. So, choose proper O-ring.
- Fit O-ring so as to be free from distortion and bend.
- Floating seal should be put in pairs.

(2) Flexible hose (F hose)
- Even if the connector and length of hose are the same, the parts differ according to the withstanding pressure. Use proper parts.
- Tighten it to the specified torque, and check that it is free from twist, over tension, interference, and oil leak.

1.1.6 WELD REPAIR

(1) The weld repair should be carried out by qualified personnel in the specified procedure after disconnecting the grounding cable of battery. If the grounding cable is not disconnected, the electrical equipment may be damaged.

(2) Remove parts which may cause fire due to the entry of spark beforehand.

(3) Repair attachments which are damaged, giving particular attention to the plated section of piston rod to protect it from sparks, and don't fail to cover the section with flame-proof clothes.

1.1.7 ENVIRONMENTAL ISSUES

(1) Engine should be started and operated in the place where air can be sufficiently ventilated.

(2) Waste disposal
The following parts follows the regulation.
Waste oil, waste container and battery

(3) Precautions for handling hydraulic oil
Hydraulic oil may cause inflammation of eyes.
Wear goggles to protect eyes on handling it.
- When it has got in eyes ;
  Wash eyes with water until the stimulus is gone.
- When it was swallowed ;
  Don't force him to vomit it, but immediately receive medical treatment.
- When it has adhered on skin ;
  Wash with soap and water.

(4) Others
For spare parts, grease and oil, use KOBELCO genuine ones.

1-5

1.2 INTERNATIONAL UNIT SYSTEM

Introduction

Although this manual uses the SI units system. Outline of SI units system is described here.
Given hereinunder are an excerpt of the units that are related to this manual :

1. Etymology of SI Units
   English : International System of units
2. Construction of SI Unit System

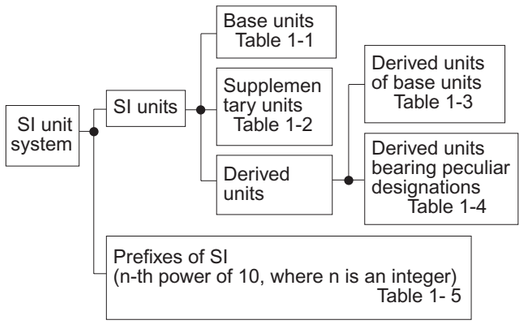

(1) Basic Units

Table1-1

QUANTITIES	DESIGNATION	SIGN
Length	Meter	m
Mass	Kilogram	kg
Time	Second	s
Current	Ampere	A
Thermodynamic temperature	Kelvin	K
Gram molecule	Mol	mol
Luminous intensity	Candela	cd

(2) Supplementary Units

Table1-2

QUANTITIES	DESIGNATION	SIGN
Plain angle	Radian	rad
Solid angle	Steradian	sr

(3) Derived Units of Basic Units

Table1-3

QUANTITIES	DESIGNATION	SIGN
Area	Square meter	m^2
Volume	Cubic meter	m^3
Velocity	Meter per second	m/s
Acceleration	Meter per second / second	m/s^2
Density	Kilogram per cubic meter	kg/m^3

(4) Derived Units bearing Peculiar Designations

Table1-4

QUANTITY	UNIT	SYMBOL	FORMULA
Frequency	hertz	Hz	1Hz=1/s
Force	newton	N	$kg \cdot m/s^2$
Pressure and Stress	pascal	Pa	N/m^2
Energy, Work and Quantity of heat	joule	J	N•m
Power	watt	W	J/s
Quantity of electricity	coulomb	C	A•s
Electric potential difference, Voltage, and Electromotive force	volt	V	W/A
Quantity of static electricity and Electric capacitance	farad	F	C/V
Electric resistance	ohm	Ω	V/A
Celcius temperature	celcius degree or degree	°C	(t+273.15)K
Illuminance	lux	lx	l m/m^2

(5) Prefixes of SI

Table1-5

PREFIX		POWER
DESIGNATION	SIGN	
Giga	G	10^9
Mega	M	10^6
Kilo	k	10^3
Hecto	h	10^2
Deca	da	10
Deci	d	10^{-1}
Centi	c	10^{-2}
Milli	m	10^{-3}
Micro	μ	10^{-6}
Nano	n	10^{-9}
Pico	p	10^{-12}

1. OUTLINE

1.2 INTERNATIONAL UNIT SYSTEM

Introduction

Although this manual uses the SI units system. Outline of SI units system is described here.
Given hereinunder are an excerpt of the units that are related to this manual :

1. Etymology of SI Units
   English : International System of units
2. Construction of SI Unit System

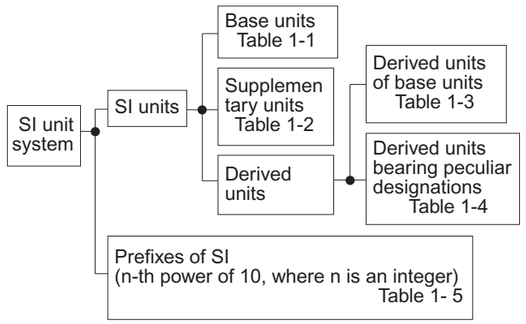

(1) Basic Units

Table1-1

QUANTITIES	DESIGNATION	SIGN
Length	Meter	m
Mass	Kilogram	kg
Time	Second	s
Current	Ampere	A
Thermodynamic temperature	Kelvin	K
Gram molecule	Mol	mol
Luminous intensity	Candela	cd

(2) Supplementary Units

Table1-2

QUANTITIES	DESIGNATION	SIGN
Plain angle	Radian	rad
Solid angle	Steradian	sr

(3) Derived Units of Basic Units

Table1-3

QUANTITIES	DESIGNATION	SIGN
Area	Square meter	m^2
Volume	Cubic meter	m^3
Velocity	Meter per second	m/s
Acceleration	Meter per second / second	m/s^2
Density	Kilogram per cubic meter	kg/m^3

(4) Derived Units bearing Peculiar Designations

Table1-4

QUANTITY	UNIT	SYMBOL	FORMULA
Frequency	hertz	Hz	1Hz=1/s
Force	newton	N	$kg \cdot m/s^2$
Pressure and Stress	pascal	Pa	N/m^2
Energy, Work and Quantity of heat	joule	J	N•m
Power	watt	W	J/s
Quantity of electricity	coulomb	C	A•s
Electric potential difference, Voltage, and Electromotive force	volt	V	W/A
Quantity of static electricity and Electric capacitance	farad	F	C/V
Electric resistance	ohm	Ω	V/A
Celcius temperature	celcius degree or degree	°C	(t+273.15)K
Illuminance	lux	lx	l m/m^2

(5) Prefixes of SI

Table1-5

PREFIX		POWER
DESIGNATION	SIGN	
Giga	G	10^9
Mega	M	10^6
Kilo	k	10^3
Hecto	h	10^2
Deca	da	10
Deci	d	10^{-1}
Centi	c	10^{-2}
Milli	m	10^{-3}
Micro	μ	10^{-6}
Nano	n	10^{-9}
Pico	p	10^{-12}

1-6

(6) Unit Conversion Table

QUANTITIES	JIS	SI	REMARKS
Mass	kg	kg	
Force	kgf	N	1kgf=9.807N
Torque	kgf•m	N•m	1kgf•m=9.807N•m
Pressure	kgf/cm^2	MPa	$1kgf/cm^2$=0.098MPa
Motive power	PS	kW	1PS=0.7355kW
Revolution	r.p.m	min^{-1}	1r.p.m=$1min^{-1}$

1. OUTLINE

(6) Unit Conversion Table

QUANTITIES	JIS	SI	REMARKS
Mass	kg	kg	
Force	kgf	N	1kgf=9.807N
Torque	kgf•m	N•m	1kgf•m=9.807N•m
Pressure	kgf/cm^2	MPa	$1kgf/cm^2$=0.098MPa
Motive power	PS	kW	1PS=0.7355kW
Revolution	r.p.m	min^{-1}	1r.p.m=$1min^{-1}$

1-7

[MEMO]

1. OUTLINE

[MEMO]

1-8

2. SPECIFICATIONS

TABLE OF CONTENTS

2.1 NAME OF COMPONENTS 2-3
2.2 GENERAL DIMENSIONS 2-4
2.2.1 E215B/E215BLC
[5.65m (18ft-6in) Boom+2.94m (9ft-8in) Standard Arm+0.80m³ (1.05cu•yd) Bucket Shoe] 2-4
2.2.2 E215B/E215BLC
[5.65m (18ft-6in)+2.4m (7ft-10in) Short Arm+0.93m³ (1.22cu•yd) Bucket Shoe] 2-4
2.2.3 E215B/E215BLC
[5.65m (18ft-6in) Boom+3.5m (11ft-6in) Long Arm+0.70m³ (0.92cu•yd) Bucket Shoe] 2-5
2.3 WEIGHT OF COMPONENTS 2-6
2.4 TRANSPOTATION 2-8
2.4.1 OVERALL DIMENSIONS OF MACHINE ON A TRAILER 2-8
2.4.2 DIMENSIONS OF ATTACHMENT 2-9
2.5 SPECIFICATIONS AND PERFORMANCE 2-11
2.5.1 SPEED AND CLIMBING CAPABILITY 2-11
2.5.2 ENGINE 2-11
2.5.3 HYDRAULIC COMPONENTS 2-11
2.5.4 WEIGHT 2-11
2.6 TYPE OF CRAWLER 2-12
2.7 TYPE OF BUCKET 2-12
2.8 COMBINATIONS OF ATTACHMENT 2-13
2.9 ENGINE SPECIFICATIONS 2-14
2.9.1 SPECIFICATIONS 2-14
2.9.2 ENGINE CHARACTERISTIC CURVE (HINO J05E-TG) 2-15

2

2. SPECIFICATIONS

TABLE OF CONTENTS

2.1 NAME OF COMPONENTS 2-3
2.2 GENERAL DIMENSIONS 2-4
2.2.1 E215B/E215BLC
[5.65m (18ft-6in) Boom+2.94m (9ft-8in) Standard Arm+0.80m³ (1.05cu•yd) Bucket Shoe] 2-4
2.2.2 E215B/E215BLC
[5.65m (18ft-6in)+2.4m (7ft-10in) Short Arm+0.93m³ (1.22cu•yd) Bucket Shoe] 2-4
2.2.3 E215B/E215BLC
[5.65m (18ft-6in) Boom+3.5m (11ft-6in) Long Arm+0.70m³ (0.92cu•yd) Bucket Shoe] 2-5
2.3 WEIGHT OF COMPONENTS 2-6
2.4 TRANSPOTATION 2-8
2.4.1 OVERALL DIMENSIONS OF MACHINE ON A TRAILER 2-8
2.4.2 DIMENSIONS OF ATTACHMENT 2-9
2.5 SPECIFICATIONS AND PERFORMANCE 2-11
2.5.1 SPEED AND CLIMBING CAPABILITY 2-11
2.5.2 ENGINE 2-11
2.5.3 HYDRAULIC COMPONENTS 2-11
2.5.4 WEIGHT 2-11
2.6 TYPE OF CRAWLER 2-12
2.7 TYPE OF BUCKET 2-12
2.8 COMBINATIONS OF ATTACHMENT 2-13
2.9 ENGINE SPECIFICATIONS 2-14
2.9.1 SPECIFICATIONS 2-14
2.9.2 ENGINE CHARACTERISTIC CURVE (HINO J05E-TG) 2-15

Book Code No. S5YN0225E01

2-1

Issue	Date of Issue	Applicable Machines	Remarks
First edition	July, 2007	E215B : YN11-45001~ E215BLC : YQ11-06001~	S5YN0225E01 (NHK Russia) HS Engine K
↑	↑	↑	↑ (NHK Middle East) HS Engine K

2. SPECIFICATIONS

Issue	Date of Issue	Applicable Machines	Remarks
First edition	July, 2007	E215B : YN11-45001~ E215BLC : YQ11-06001~	S5YN0225E01 (NHK Russia) HS Engine K
↑	↑	↑	↑ (NHK Middle East) HS Engine K

2-2

2.1 NAME OF COMPONENTS

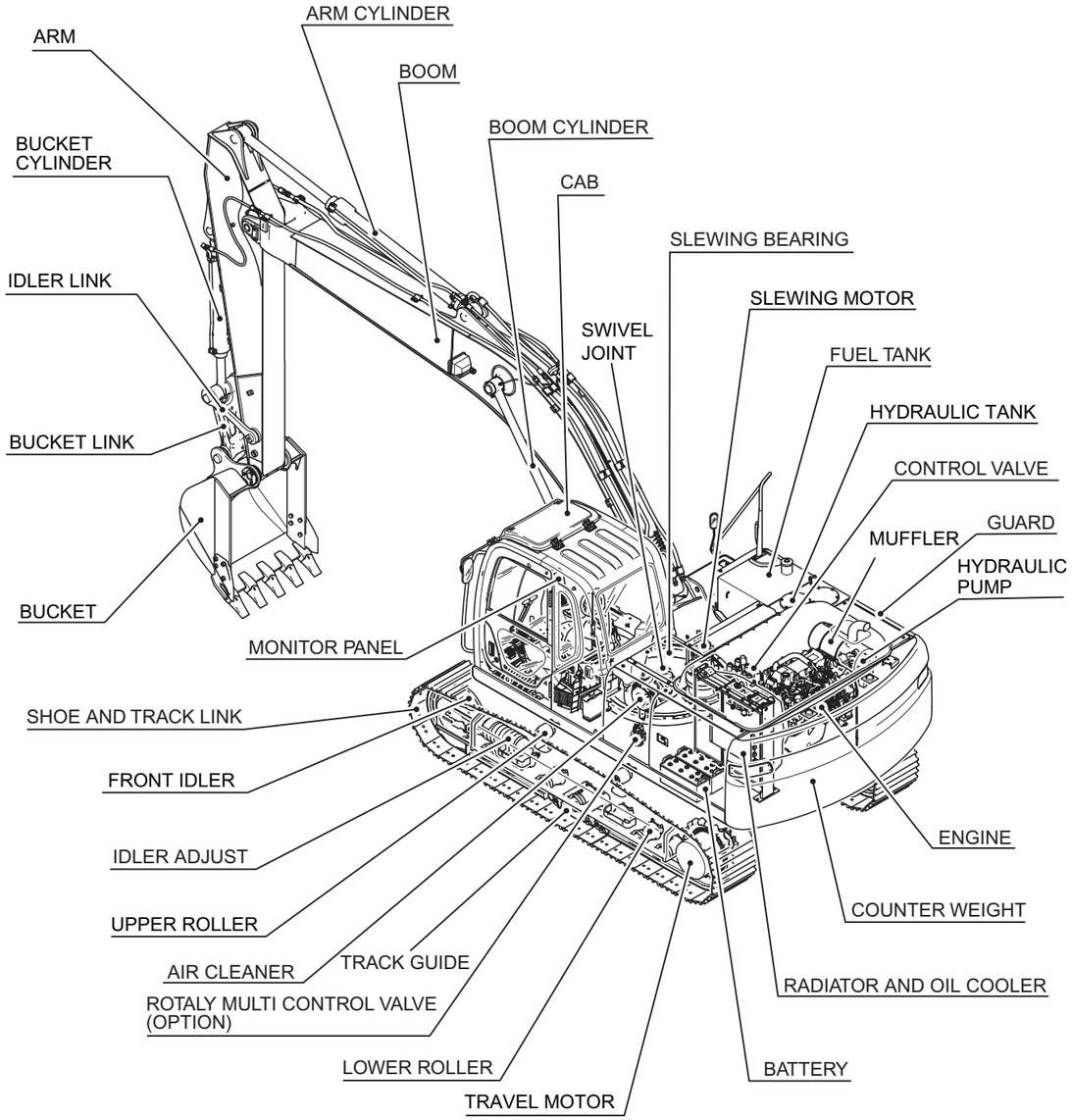

2. SPECIFICATIONS

2.1 NAME OF COMPONENTS

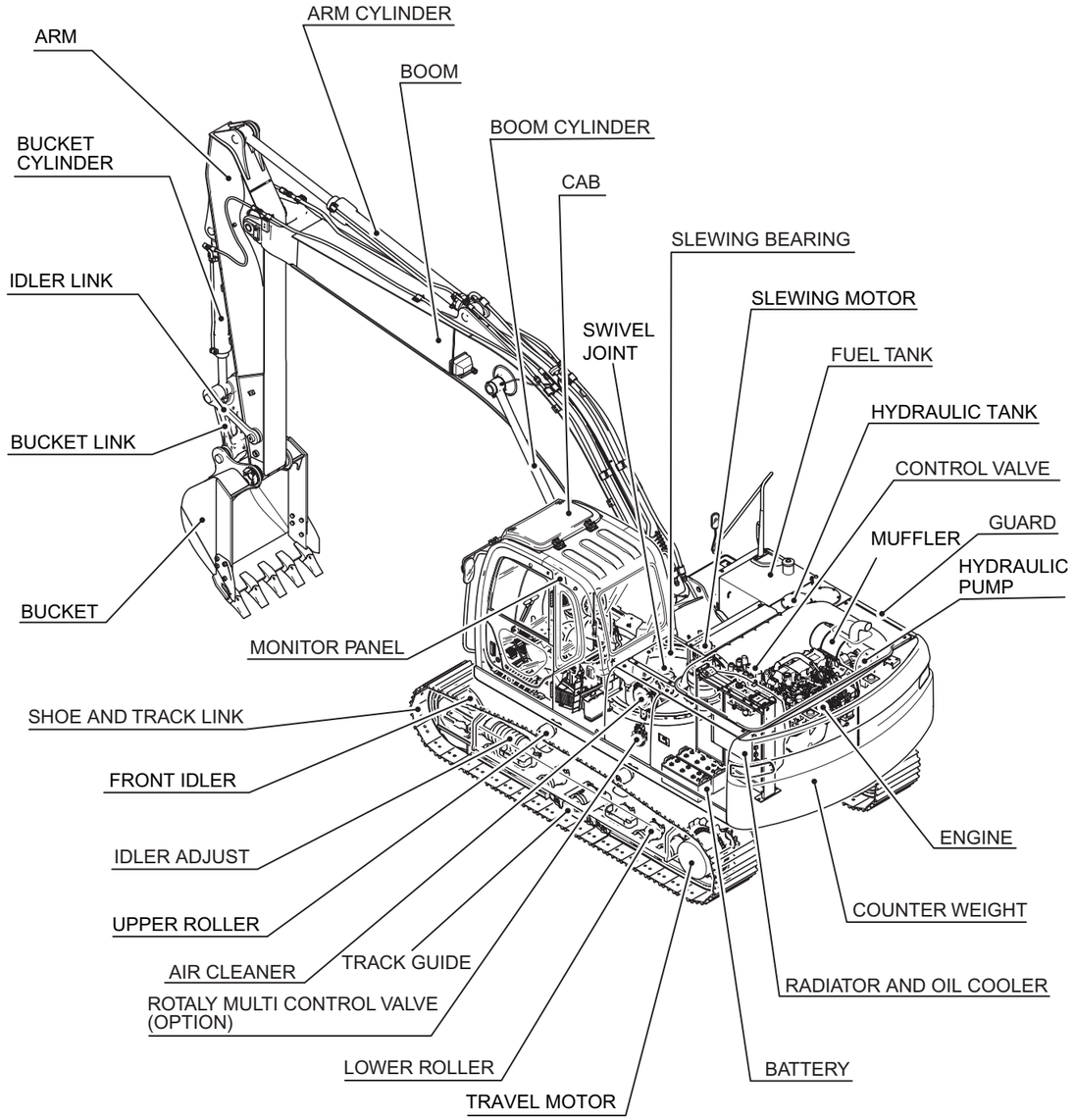

2-3

2.2 GENERAL DIMENSIONS

2.2.1 E215B/E215BLC [5.65m (18ft-6in) Boom+2.94m (9ft-8in) Standard Arm+0.80m³ (1.05cu•yd) Bucket Shoe]

Unit : mm(ft-in)

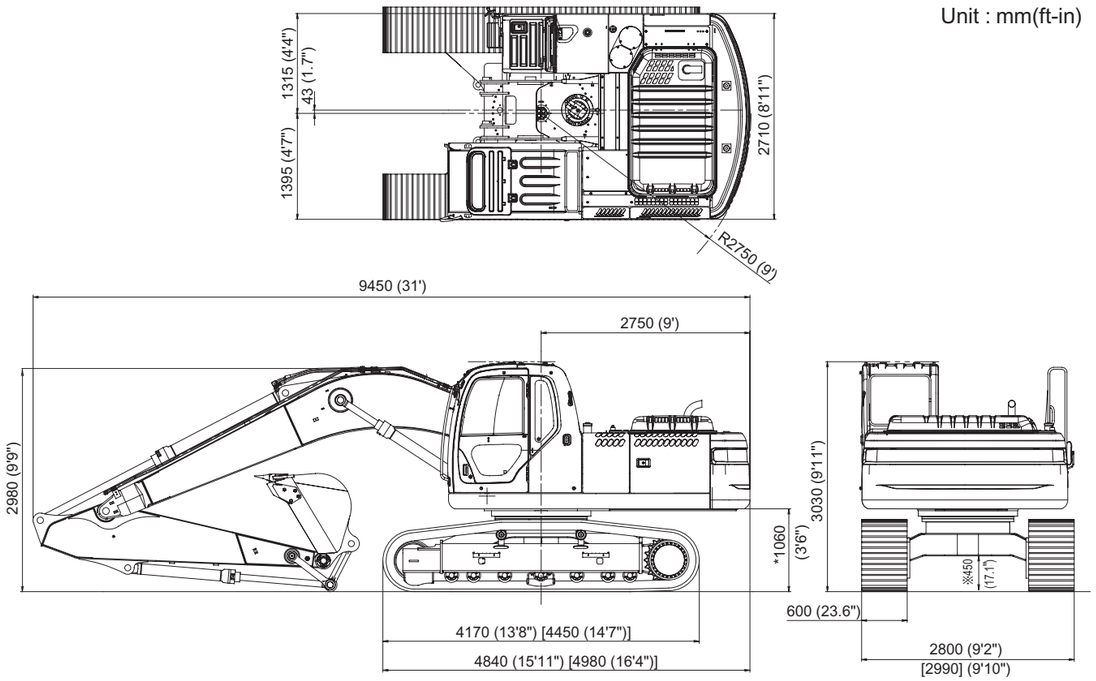

Note

Dimensions marked * do not include the height of the shoe lug.
[ ] include LC specifications.

2.2.2 E215B/E215BLC [5.65m (18ft-6in)+2.4m (7ft-10in) Short Arm+0.93m³ (1.22cu•yd) Bucket Shoe]

Unit : mm(ft-in)

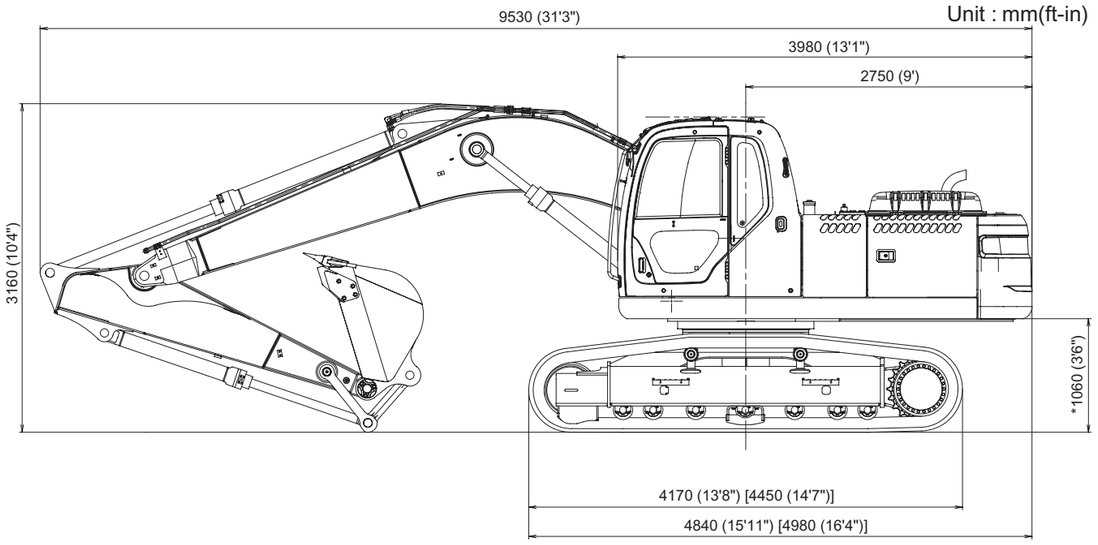

2. SPECIFICATIONS

2.2 GENERAL DIMENSIONS

2.2.1 E215B/E215BLC [5.65m (18ft-6in) Boom+2.94m (9ft-8in) Standard Arm+0.80m³ (1.05cu•yd) Bucket Shoe]

Unit : mm(ft-in)

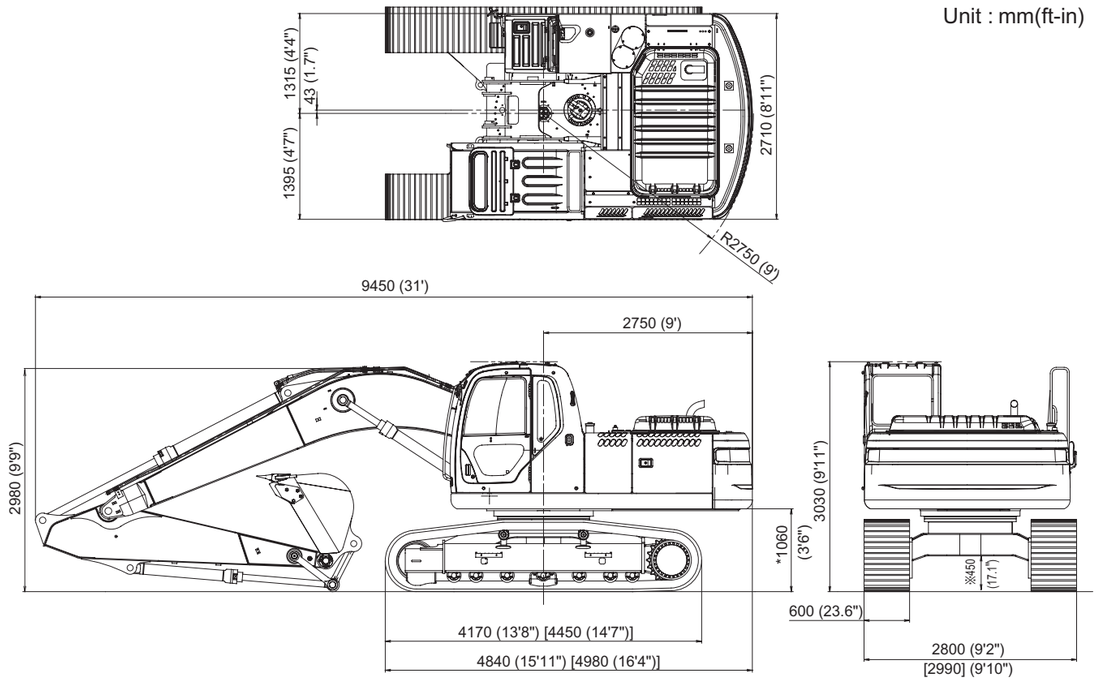

Note

Dimensions marked * do not include the height of the shoe lug.
[ ] include LC specifications.

2.2.2 E215B/E215BLC [5.65m (18ft-6in)+2.4m (7ft-10in) Short Arm+0.93m³ (1.22cu•yd) Bucket Shoe]

Unit : mm(ft-in)

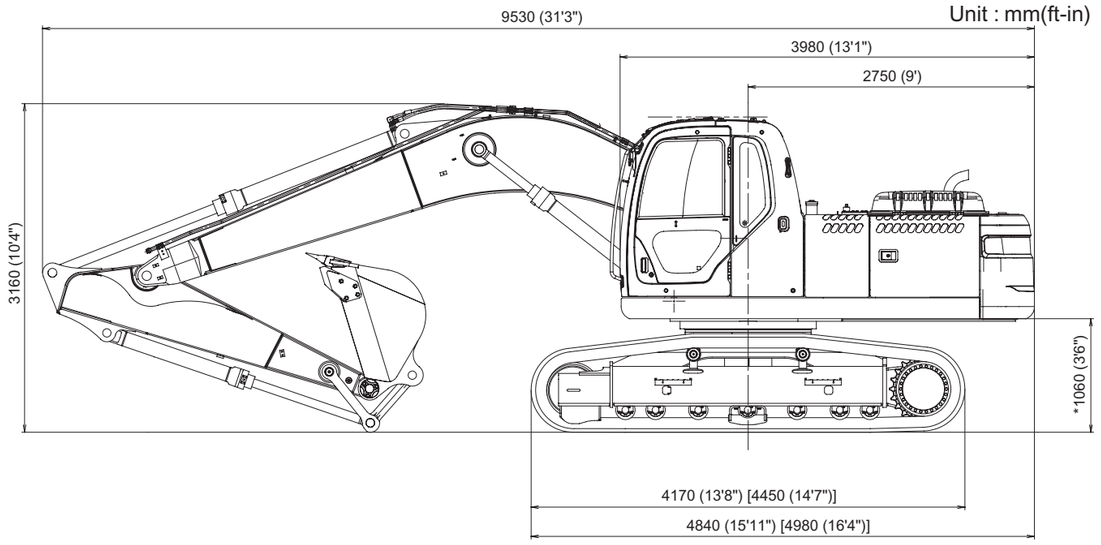

2.2.3 E215B/E215BLC [5.65m (18ft-6in) Boom+3.5m (11ft-6in) Long Arm+0.70m³ (0.92cu•yd) Bucket Shoe]

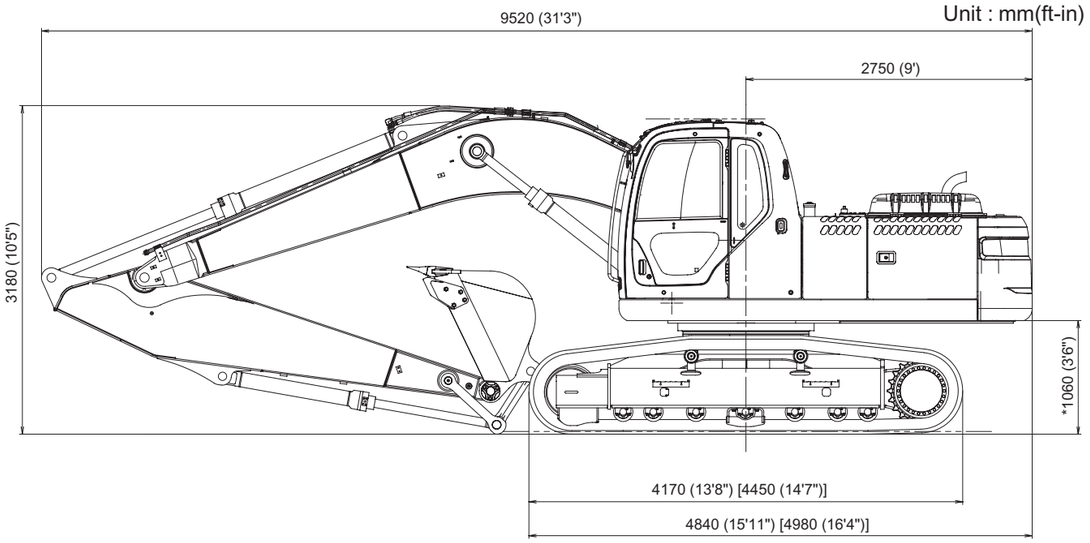

Note

Dimensions marked * do not include the height of the shoe lug.
[ ] include LC specifications.

2. SPECIFICATIONS

2.2.3 E215B/E215BLC [5.65m (18ft-6in) Boom+3.5m (11ft-6in) Long Arm+0.70m³ (0.92cu•yd) Bucket Shoe]

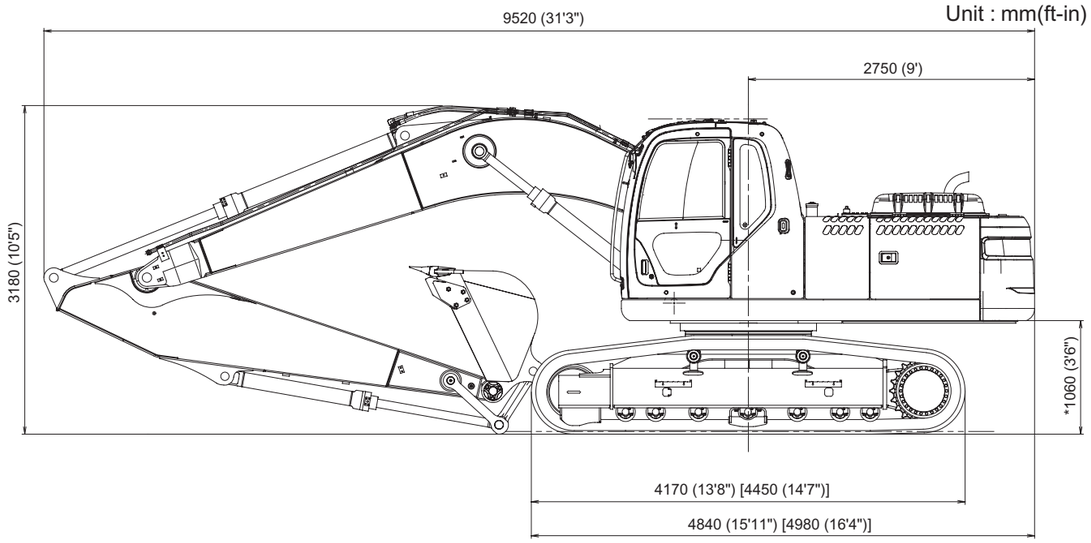

Note

Dimensions marked * do not include the height of the shoe lug.
[ ] include LC specifications.

2.3 WEIGHT OF COMPONENTS

Unit ; kg (lb)

Item / Model	E215B	E215BLC
Machine complete	20,200 (44,500)	20,600 (45,400)
1. Upper frame assy (Assembly of following :)	9,500 (21,000)	←
1.1 Upper frame	1,770 (3,900)	←
1.2 Counter weight (Semi-weighted)	4,640 (10,230)	←
1.3 Cab	260 (570)	←
1.4 Engine	*540 (1,190)	←
1.5 Hydraulic oil tank	*150 (330)	←
1.6 Fuel tank	*110 (240)	←
1.7 Slewing motor (including reduction unit)	*210 (460)	←
1.8 Control valve	*230 (510)	←
1.9 Boom cylinder	*170 (375) × 2	←
1.10 Pin (for mounting boom)	70 (150)	←
1.11 Pump	*130 (290)	←
1.12 Radiator (including intercooler)	*90 (200)	←
2. Lower frame assy (Assembly of following :)	6,730 (14,840)	7,130 (15,720)
2.1 Lower frame	2,260 (4,980)	2,420 (5,340)
2.2 Slewing bearing	250 (550)	←
2.3 Travel motor (including reduction unit)	260 (570) × 2	←
2.4 Upper roller	20 (44) × 2	←
2.5 Lower roller	30 (66) × 14	30 (66) × 16
2.6 Front idler	110 (240) × 2	←
2.7 Idler adjuster	100 (220) × 2	←
2.8 Sprocket	50 (110) × 2	←
2.9 Swivel joint	*30 (66)	←
2.10 Track link with 600mm (23.6in) shoes assy	1,260 (2,780) × 2	1,350 (2,980) × 2
Track link with 700mm (27.6in) shoes assy	1,470 (3,240) × 2	1,560 (3,440) × 2
Track link with 800mm (31.5in) shoes assy	1,600 (3,530) × 2	1,700 (3,750) × 2
2.10.1 Track link assy	510 (1,120) × 2	540 (1,190) × 2
3. Attachment (Assembly of following / STD :)	3,420 (7,540)	←
{5.65m (18ft-6in) Boom + 2.94m (9ft-8in) Arm + 0.80m³ (1cu•yd) Bucket}		
3.1 Bucket assy (STD)	640 (1,410)	←
3.2 STD Arm assy (Assembly of following :)	1,050 (2,315)	←
3.2.1 STD Arm	660 (1,455)	←
3.2.2 Bucket cylinder	*140 (310)	←
3.2.3 Idler link	20 (44) × 2	←
3.2.4 Bucket link	90 (198)	←
3.2.5 Pin (2pcs. for mounting bucket cylinder / 2pcs. for mounting bucket)	100 (220)	←
3.3 Boom assy (Assembly of following :)	1,730 (3,815)	←
3.3.1 Boom	1,310 (2,890)	←
3.3.2 Arm cylinder	*255 (560)	←
3.3.3 Pin (Mounting arm • Mounting arm cylinder)	80 (180)	←

2. SPECIFICATIONS

2.3 WEIGHT OF COMPONENTS

Unit ; kg (lb)

Item / Model	E215B	E215BLC
Machine complete	20,200 (44,500)	20,600 (45,400)
1. Upper frame assy (Assembly of following :)	9,500 (21,000)	←
1.1 Upper frame	1,770 (3,900)	←
1.2 Counter weight (Semi-weighted)	4,640 (10,230)	←
1.3 Cab	260 (570)	←
1.4 Engine	*540 (1,190)	←
1.5 Hydraulic oil tank	*150 (330)	←
1.6 Fuel tank	*110 (240)	←
1.7 Slewing motor (including reduction unit)	*210 (460)	←
1.8 Control valve	*230 (510)	←
1.9 Boom cylinder	*170 (375) × 2	←
1.10 Pin (for mounting boom)	70 (150)	←
1.11 Pump	*130 (290)	←
1.12 Radiator (including intercooler)	*90 (200)	←
2. Lower frame assy (Assembly of following :)	6,730 (14,840)	7,130 (15,720)
2.1 Lower frame	2,260 (4,980)	2,420 (5,340)
2.2 Slewing bearing	250 (550)	←
2.3 Travel motor (including reduction unit)	260 (570) × 2	←
2.4 Upper roller	20 (44) × 2	←
2.5 Lower roller	30 (66) × 14	30 (66) × 16
2.6 Front idler	110 (240) × 2	←
2.7 Idler adjuster	100 (220) × 2	←
2.8 Sprocket	50 (110) × 2	←
2.9 Swivel joint	*30 (66)	←
2.10 Track link with 600mm (23.6in) shoes assy	1,260 (2,780) × 2	1,350 (2,980) × 2
Track link with 700mm (27.6in) shoes assy	1,470 (3,240) × 2	1,560 (3,440) × 2
Track link with 800mm (31.5in) shoes assy	1,600 (3,530) × 2	1,700 (3,750) × 2
2.10.1 Track link assy	510 (1,120) × 2	540 (1,190) × 2
3. Attachment (Assembly of following / STD :)	3,420 (7,540)	←
{5.65m (18ft-6in) Boom + 2.94m (9ft-8in) Arm + 0.80m³ (1cu•yd) Bucket}		
3.1 Bucket assy (STD)	640 (1,410)	←
3.2 STD Arm assy (Assembly of following :)	1,050 (2,315)	←
3.2.1 STD Arm	660 (1,455)	←
3.2.2 Bucket cylinder	*140 (310)	←
3.2.3 Idler link	20 (44) × 2	←
3.2.4 Bucket link	90 (198)	←
3.2.5 Pin (2pcs. for mounting bucket cylinder / 2pcs. for mounting bucket)	100 (220)	←
3.3 Boom assy (Assembly of following :)	1,730 (3,815)	←
3.3.1 Boom	1,310 (2,890)	←
3.3.2 Arm cylinder	*255 (560)	←
3.3.3 Pin (Mounting arm • Mounting arm cylinder)	80 (180)	←

2-6

Unit ; kg (lb)

Item / Model	E215B	E215BLC
4. Lubricant and water (Assembly of following :)	550 (1,210)	←
4.1 Hydraulic oil	200 (440)	←
4.2 Engine oil	20 (44)	←
4.3 Fuel	310 (680)	←
4.4 Water	20 (44)	←

Note

Marks * show dry weight.

2. SPECIFICATIONS

Unit ; kg (lb)

Item / Model	E215B	E215BLC
4. Lubricant and water (Assembly of following :)	550 (1,210)	←
4.1 Hydraulic oil	200 (440)	←
4.2 Engine oil	20 (44)	←
4.3 Fuel	310 (680)	←
4.4 Water	20 (44)	←

Note

Marks * show dry weight.

2-7

2.4 TRANSPOTATION

2.4.1 OVERALL DIMENSIONS OF MACHINE ON A TRAILER

(1) 5.65m (18ft-6in) Boom+2.94m (9ft-8in) Arm+0.80m³ (1.05cu•yd) Bucket

Model / Item	E215B	E215BLC
Width 600mm (23.6in) shoes	2,800 (9ft-2in)	2,990 (9ft-10in)
Weight	20,200kg (44,500 lbs)	20,600kg (45,400 lbs)

Unit : mm (ft-in)

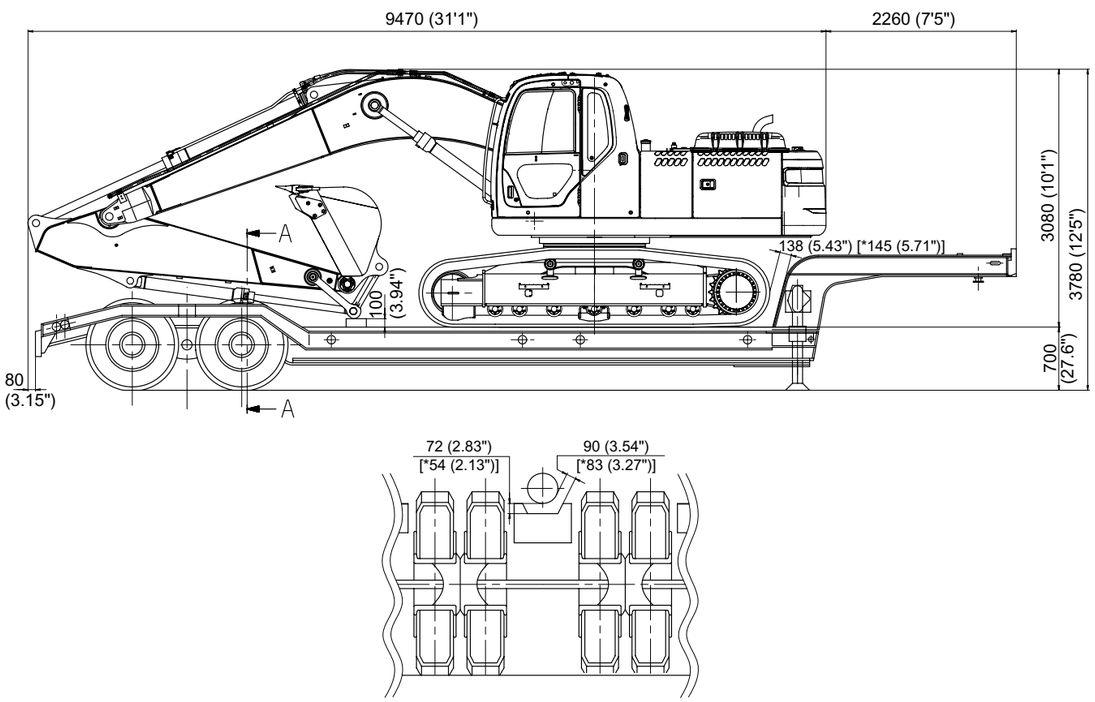

SECTION AA

Note

* marks indicate LC specifications.

2. SPECIFICATIONS

2.4 TRANSPOTATION

2.4.1 OVERALL DIMENSIONS OF MACHINE ON A TRAILER

(1) 5.65m (18ft-6in) Boom+2.94m (9ft-8in) Arm+0.80m³ (1.05cu•yd) Bucket

Model / Item	E215B	E215BLC
Width 600mm (23.6in) shoes	2,800 (9ft-2in)	2,990 (9ft-10in)
Weight	20,200kg (44,500 lbs)	20,600kg (45,400 lbs)

Unit : mm (ft-in)

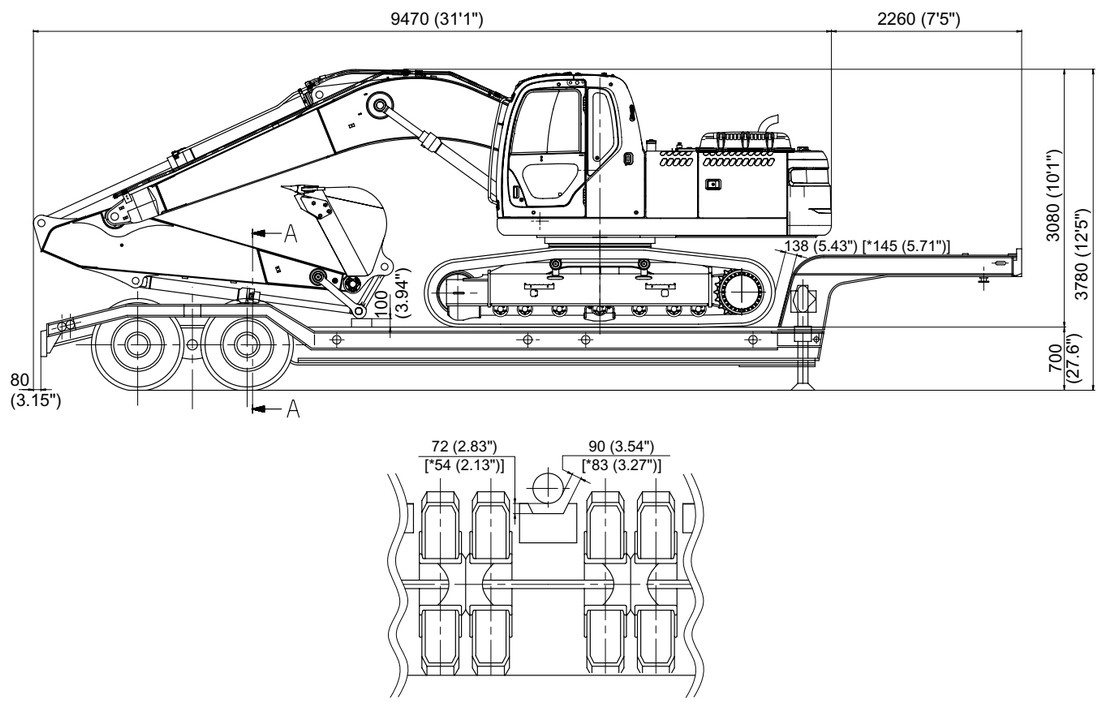

SECTION AA

Note

* marks indicate LC specifications.

2-8

2.4.2 DIMENSIONS OF ATTACHMENT

(1) BOOM

Item / Type		5.65m (18ft-6in) Boom
Length×Height×Width L×H×W	m (ft-in)	5.86 × 1.57 × 0.67 (19'3"× 5'2"× 2'2")
Weight	kg (lbs)	1,670 (3,680)

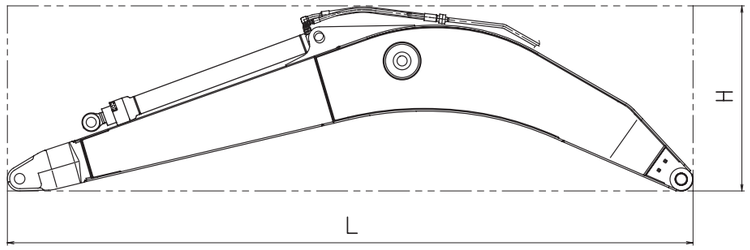

(2) ARM AND BUCKET

Item / Type		2.4m (7ft-10in) Arm + 0.93m ³(1.22cu•yd) Bucket	2.94m (9ft-8in) Arm + 0.80m ³ (1.05cu•yd) Bucket	3.5m (11ft-6in) Arm + 0.70m ³ (0.92cu•yd) Bucket
Length×Height×Width L×H×W	m (ft-in)	4.75 × 0.9 × 1.33 (15'7"×2'11"×4'4")	5.29 × 0.9 ×1.16 (17'4"×2'11"×4')	5.88 × 0.9 × 1.08 (19'3"×2'11"×3'7")
Weight	kg (lbs)	1,740 (3,840)	1,680 (3,700)	1,880 (4,150)

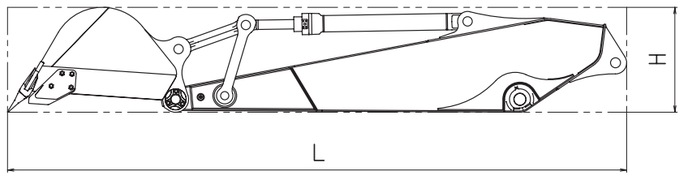

(3) Arm

Item / Type		2.4 m (7ft-10in) Arm	2.94 m (9ft-8in) Arm	3.5 m (11ft-6in) Arm
Length×Height×Width L×H×W	m (ft-in)	3.40 × 0.86 × 0.56 (11'2"×2'10"×1'10")	3.94 × 0.86 × 0.56 (12'11"×2'10"×1'10")	4.53 × 0.87 × 0.56 (14'10"×2'10"×1'10")
Weight	kg (lbs)	1,020 (2,250)	1,044 (2,300)	1,260 (2,780)

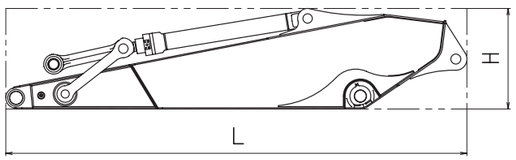

2. SPECIFICATIONS

2.4.2 DIMENSIONS OF ATTACHMENT

(1) BOOM

Item / Type		5.65m (18ft-6in) Boom
Length×Height×Width L×H×W	m (ft-in)	5.86 × 1.57 × 0.67 (19'3"× 5'2"× 2'2")
Weight	kg (lbs)	1,670 (3,680)

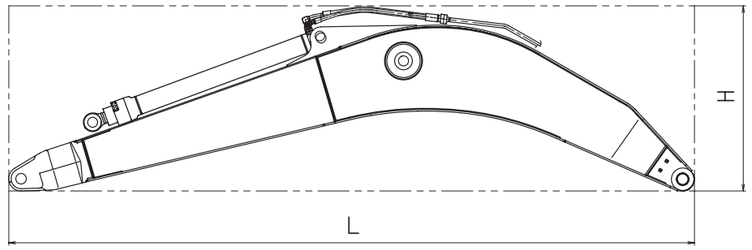

(2) ARM AND BUCKET

Item / Type		2.4m (7ft-10in) Arm + 0.93m ³(1.22cu•yd) Bucket	2.94m (9ft-8in) Arm + 0.80m ³ (1.05cu•yd) Bucket	3.5m (11ft-6in) Arm + 0.70m ³ (0.92cu•yd) Bucket
Length×Height×Width L×H×W	m (ft-in)	4.75 × 0.9 × 1.33 (15'7"×2'11"×4'4")	5.29 × 0.9 ×1.16 (17'4"×2'11"×4')	5.88 × 0.9 × 1.08 (19'3"×2'11"×3'7")
Weight	kg (lbs)	1,740 (3,840)	1,680 (3,700)	1,880 (4,150)

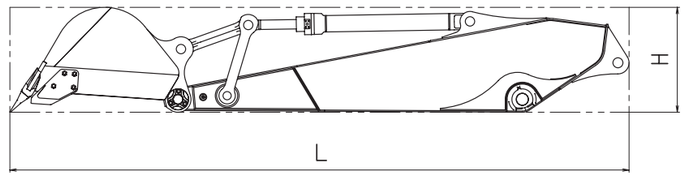

(3) Arm

Item / Type		2.4 m (7ft-10in) Arm	2.94 m (9ft-8in) Arm	3.5 m (11ft-6in) Arm
Length×Height×Width L×H×W	m (ft-in)	3.40 × 0.86 × 0.56 (11'2"×2'10"×1'10")	3.94 × 0.86 × 0.56 (12'11"×2'10"×1'10")	4.53 × 0.87 × 0.56 (14'10"×2'10"×1'10")
Weight	kg (lbs)	1,020 (2,250)	1,044 (2,300)	1,260 (2,780)

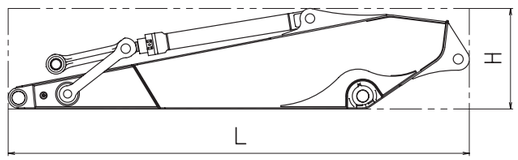

(4) Bucket

Type		Hoe bucket			
Length×Height×Width L×H×W	m (ft-in	1.37 × 1.26× 0.87 (4'6"×4'2"×2'10")	1.37 × 1.26× 1.07 (4'6"×4'2"×3'6")	1.37 × 1.26× 1.16 (4'6"×4'2"×3'10")	1.37 × 1.26× 1.33 (4'6"×4'2"×4'4")
Weight	kg (lbs)	520 (1,150)	630 (1,390)	640 (1,410)	710 (1,560)
Bucket capacity	m³ cu•yd	0.51 (0.67)	0.70 (0.92)	STD 0.80 (1.05)	0.93 (1.22)

Type		Hoe bucket	Slope finishing bucket		
Length×Height×Width L×H×W	m (ft-in	1.37×1.26×1.16 (4'6"×4'2"×3'10")	1.25×0.90×2.20 (4'1"×2'11"×7'3")		
Weight	kg (lbs)	750 (1,650)	890 (1,960)		
Bucket capacity	m³ cu•yd	0.80 (1.05) HD	0.82 (1.07)		

● Hoe bucket

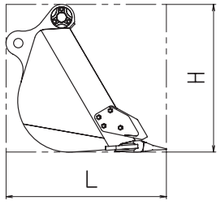

● Slope finishing bucket

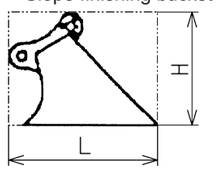

2. SPECIFICATIONS

(4) Bucket

Type		Hoe bucket			
Length×Height×Width L×H×W	m (ft-in	1.37 × 1.26× 0.87 (4'6"×4'2"×2'10")	1.37 × 1.26× 1.07 (4'6"×4'2"×3'6")	1.37 × 1.26× 1.16 (4'6"×4'2"×3'10")	1.37 × 1.26× 1.33 (4'6"×4'2"×4'4")
Weight	kg (lbs)	520 (1,150)	630 (1,390)	640 (1,410)	710 (1,560)
Bucket capacity	m³ cu•yd	0.51 (0.67)	0.70 (0.92)	STD 0.80 (1.05)	0.93 (1.22)

Type		Hoe bucket	Slope finishing bucket		
Length×Height×Width L×H×W	m (ft-in	1.37×1.26×1.16 (4'6"×4'2"×3'10")	1.25×0.90×2.20 (4'1"×2'11"×7'3")		
Weight	kg (lbs)	750 (1,650)	890 (1,960)		
Bucket capacity	m³ cu•yd	0.80 (1.05) HD	0.82 (1.07)		

● Hoe bucket

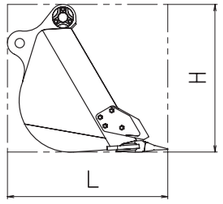

● Slope finishing bucket

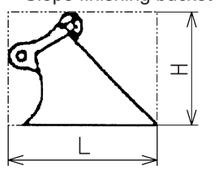

2-10

2.5 SPECIFICATIONS AND PERFORMANCE

2.5.1 SPEED AND CLIMBING CAPABILITY

Item \ Area & Model		E215B	E215BLC
Swing speed	min-1 {rpm}	12.5 {12.5}	
Travel speed (1-speed/2-speed)	km/h (mile/h)	3.6 / 6.0 (2.2 / 3.7)	
Gradeability	% (degree)	70 (35)	

2.5.2 ENGINE

Engine model	HINO J05E-TG
Type	Water-cooled, 4 cycle 4 cylinder direct injection type diesel engine with inter cooler turbo-charger
Number of cylinders—Bore×Stroke	4 -ø112 mm × 130 mm (4.41 in × 5.12 in)
Total displacement	5.123 L (312.61 cu•in)
Rated output / Engine speed	114 kW (155 PS) / 2,000 min-1
Maximum torque / Engine speed	572 N•m (422 lbf•ft)/ 1,600 min-1
Starter	24 V / 5.0kW
Alternator	24 V / 1.2kW

2.5.3 HYDRAULIC COMPONENTS

Hydraulic pump	Variable displacement axial piston pump × 2 + gear pump × 1
Hydraulic motor (swing)	Axial piston motor × 1
Hydraulic motor (travel)	Variable displacement axial piston motor × 2 (with counterbalance valve)
Control valve	8-spool control valve × 1
Cylinder (Boom, Arm, Bucket)	Double action cylinder
Oil cooler	Air-cooled type

2.5.4 WEIGHT

Unit : kg (lbs)

Fully equipped weight	20,200 (44,500)	20,600 (45,400)
Upper structure	9,500 (21,000)	←
Lower machinery (600mm grouser shoe)	6,730 (14,840)	7,130 (15,720)
Attachment 5.65m (18 ft-6in) Boom+2.94m (9ft-8in) Arm +0.80m3 (1.05cu•yd) Bucket	3,420 (7,540)	←

2. SPECIFICATIONS

2.5 SPECIFICATIONS AND PERFORMANCE

2.5.1 SPEED AND CLIMBING CAPABILITY

Item \ Area & Model		E215B	E215BLC
Swing speed	min-1 {rpm}	12.5 {12.5}	
Travel speed (1-speed/2-speed)	km/h (mile/h)	3.6 / 6.0 (2.2 / 3.7)	
Gradeability	% (degree)	70 (35)	

2.5.2 ENGINE

Engine model	HINO J05E-TG
Type	Water-cooled, 4 cycle 4 cylinder direct injection type diesel engine with inter cooler turbo-charger
Number of cylinders—Bore×Stroke	4 -ø112 mm × 130 mm (4.41 in × 5.12 in)
Total displacement	5.123 L (312.61 cu•in)
Rated output / Engine speed	114 kW (155 PS) / 2,000 min-1
Maximum torque / Engine speed	572 N•m (422 lbf•ft)/ 1,600 min-1
Starter	24 V / 5.0kW
Alternator	24 V / 1.2kW

2.5.3 HYDRAULIC COMPONENTS

Hydraulic pump	Variable displacement axial piston pump × 2 + gear pump × 1
Hydraulic motor (swing)	Axial piston motor × 1
Hydraulic motor (travel)	Variable displacement axial piston motor × 2 (with counterbalance valve)
Control valve	8-spool control valve × 1
Cylinder (Boom, Arm, Bucket)	Double action cylinder
Oil cooler	Air-cooled type

2.5.4 WEIGHT

Unit : kg (lbs)

Fully equipped weight	20,200 (44,500)	20,600 (45,400)
Upper structure	9,500 (21,000)	←
Lower machinery (600mm grouser shoe)	6,730 (14,840)	7,130 (15,720)
Attachment 5.65m (18 ft-6in) Boom+2.94m (9ft-8in) Arm +0.80m3 (1.05cu•yd) Bucket	3,420 (7,540)	←

2-11

2.6 TYPE OF CRAWLER

Shape	Shoe width mm (in)	Overall width of crawler mm (ft-in)		Ground pressure kPa (psi)
Grouser shoe 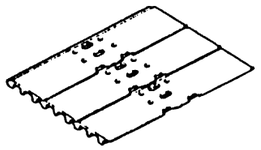 46 LINKS	600 (23.6)	STD	2,800 (9'2")	45 (6.53)
		LC	2,990 (9'10")	43 (6.24)
	700 (27.6)	STD	2,900 (9'6")	40 (5.80)
		LC	3,090 (10'2")	38 (5.51)
	800 (31.5)	STD	3,000 (9'10")	35 (5.08)
		LC	3,190 (10'6")	33 (4.79)

Note

Use 600mm (23.6") grouser shoes on rough ground (areas covered with rocks and gravel). If you drive or excavate with other shoes, this may cause shoe bending, shoe bolt looseness, and track assembly (link, roller, etc.)

2.7 TYPE OF BUCKET

Hoe bucket 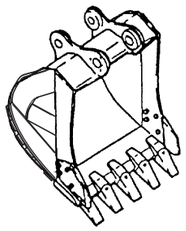	Heaped capacity m³(cu•yd)	Struck m³(cu•yd)	Outer width mm (ft-in) With side cutter	Outer width mm (ft-in) Without side cutter	Number of tooth	W or W/O side cutter	Availability of face shovel	Weight kg (lbs)
	0.51 (0.67)	0.39 (0.51)	870 (2'10")	770 (2'6")	3	W	YES	520 (1,150)
	0.70 (0.92)	0.52 (0.68)	1,080 (3'6")	980 (3'3")	5	W	YES	630 (1,390)
	[STD] 0.80 (1.05)	0.59 (0.77)	1,160 (3'10")	1,060 (3'6")	5	W	YES	640 (1,410)
	0.93 (1.2)	0.67 (0.88)	1,330 (4'4")	1,230 (4')	5	W	YES	710 (1,560)

2. SPECIFICATIONS

2.6 TYPE OF CRAWLER

Shape | Shoe width mm (in) | Overall width of crawler mm (ft-in) | Ground pressure kPa (psi)
Grouser shoe 46 LINKS | 600 (23.6) | STD | 2,800 (9'2") | 45 (6.53)
LC | 2,990 (9'10") | 43 (6.24)
700 (27.6) | STD | 2,900 (9'6") | 40 (5.80)
LC | 3,090 (10'2") | 38 (5.51)
800 (31.5) | STD | 3,000 (9'10") | 35 (5.08)
LC | 3,190 (10'6") | 33 (4.79)

Note

Use 600mm (23.6") grouser shoes on rough ground (areas covered with rocks and gravel). If you drive or excavate with other shoes, this may cause shoe bending, shoe bolt looseness, and track assembly (link, roller, etc.)

2.7 TYPE OF BUCKET

Hoe bucket | Heaped capacity m³(cu•yd) | Struck m³(cu•yd) | Outer width mm (ft-in) With side cutter | Outer width mm (ft-in) Without side cutter | Number of tooth | W or W/O side cutter | Availability of face shovel | Weight kg (lbs)
0.51 (0.67) | 0.39 (0.51) | 870 (2'10") | 770 (2'6") | 3 | W | YES | 520 (1,150)
0.70 (0.92) | 0.52 (0.68) | 1,080 (3'6") | 980 (3'3") | 5 | W | YES | 630 (1,390)
[STD] 0.80 (1.05) | 0.59 (0.77) | 1,160 (3'10") | 1,060 (3'6") | 5 | W | YES | 640 (1,410)
0.93 (1.2) | 0.67 (0.88) | 1,330 (4'4") | 1,230 (4') | 5 | W | YES | 710 (1,560)

2-12

2.8 COMBINATIONS OF ATTACHMENT

Bucket			Available Arm		
Type	Heaped capacity m³ (cu•yd)	Struck m³ (cu•yd)	2.94m (9ft-8in) Arm (STD)	3.5m (11ft-6in) Arm (Long)	2.4m (7ft-10in) Arm +Arm (Short)
Hoe bucket	0.51 (0.67)	0.39 (0.51)	○	○	○
	0.70 (0.92)	0.52 (0.68)	○	◎	○
	[STD] 0.80 (1.05)	0.59 (0.77)	◎	△	○
	0.93 (1.2)	0.67 (0.88)	△	×	◎
Breaker	—	—	○	○	○
Nibbler	—	—	○	○	○

Note

◎ Standard combination

○ General operation : Excavation or loading of sand, gravel, and clay

△ Light operation : Mainly loading or loose gravel (e.g., cultivation or loading of sand or gravel)

× Prohibited combination : There are problems from the view points of strength and stability.

- Use the attachments recommended by NEW HOLLAND KOBELCO.
  The trouble due to the use in the condition "Use not allowed" described in the above table is not included in our responsibility

⚠CAUTION

If any other bucket, except for the backhoe bucket, is turned over and used for excavation, damage to the arm and bucket may occur.

2. SPECIFICATIONS

2.8 COMBINATIONS OF ATTACHMENT

Bucket			Available Arm		
Type	Heaped capacity m³ (cu•yd)	Struck m³ (cu•yd)	2.94m (9ft-8in) Arm (STD)	3.5m (11ft-6in) Arm (Long)	2.4m (7ft-10in) Arm +Arm (Short)
Hoe bucket	0.51 (0.67)	0.39 (0.51)	○	○	○
	0.70 (0.92)	0.52 (0.68)	○	◎	○
	[STD] 0.80 (1.05)	0.59 (0.77)	◎	△	○
	0.93 (1.2)	0.67 (0.88)	△	×	◎
Breaker	—	—	○	○	○
Nibbler	—	—	○	○	○

Note

◎ Standard combination

○ General operation : Excavation or loading of sand, gravel, and clay

△ Light operation : Mainly loading or loose gravel (e.g., cultivation or loading of sand or gravel)

× Prohibited combination : There are problems from the view points of strength and stability.

- Use the attachments recommended by NEW HOLLAND KOBELCO.
  The trouble due to the use in the condition "Use not allowed" described in the above table is not included in our responsibility

CAUTION

If any other bucket, except for the backhoe bucket, is turned over and used for excavation, damage to the arm and bucket may occur.

2-13

2.9 ENGINE SPECIFICATIONS

2.9.1 SPECIFICATIONS

Applicable machine		E215B, E215BLC		
Engine model		HINO J05E-TG		
Type		Water-cooled, 4 cycle 4 cylinder direct injection type diesel engine with inter cooler turbo-charger		
Number of cylinder×Bore×Stroke	mm (in)	4 × 112 × 130 (4.41 × 5.12)		
Total displacement	cc (cu•in)	5,123 (313)		
Compression ratio		18.0		
Rated output	kW (PS) at min^{-1}	114 (155) at 2,000		
Maximum torque	N•m (lb•ft) at min^{-1}	572 (422) at 1,600		
High idling	min^{-1}	2,000 ± 30		
Low idling	min^{-1}	1,000 ± 30		
Injection starting pressure	MPa (psi)	50 (7,250)		
Thermostat action	Start/Full open K (°F)	350 (170) / 363 (194)		
Firing order		1 - 3 - 4 - 2		
Compression pressure	MPa (psi) at min^{-1}	3.4~3.7 (493~537) at 280		
Fuel injection timing		0°		
Valve clearance		Valve clearance	Open	Close
	Intake valve	0.3 mm at cool	14°before top dead point	30°after bottom dead point
	Exhaust valve	0.45 mm at cool	54°before bottom dead point	13°after top dead point
Starter capacity	V × kW	24 × 5.0		
Generator capacity (Alternator)	V × A	24 × 50		
Cooling fan drive method		ø650 (25.6") × suction type 7 fans, V-belt drive, pulley ratio Crank / Fan= 0.89		
Engine oil quantity	L (gal)	Full level 18.0 (4.76) Low level 15.0 (3.96) Total 20.5 (5.42)		
Dry weight	kg (lbs)	580 (1,280)		
Fuel consumption ratio	g/kW•h (g/ps•h)	217 (160)		
Allowable inclination (Limited by E/G lubrication)		Front / Rear and Right / Left : 35°		
Dimension (L×W×H)	mm (in)	1,063 × 725 × 995 (3ft-5.86in × 28.5in × 39.2in)		
Rotating direction		Counterclockwise seeing from flywheel side		

2. SPECIFICATIONS

2.9 ENGINE SPECIFICATIONS

2.9.1 SPECIFICATIONS

Applicable machine		E215B, E215BLC		
Engine model		HINO J05E-TG		
Type		Water-cooled, 4 cycle 4 cylinder direct injection type diesel engine with inter cooler turbo-charger		
Number of cylinder×Bore×Stroke	mm (in)	4 × 112 × 130 (4.41 × 5.12)		
Total displacement	cc (cu•in)	5,123 (313)		
Compression ratio		18.0		
Rated output	kW (PS) at min^{-1}	114 (155) at 2,000		
Maximum torque	N•m (lb•ft) at min^{-1}	572 (422) at 1,600		
High idling	min^{-1}	2,000 ± 30		
Low idling	min^{-1}	1,000 ± 30		
Injection starting pressure	MPa (psi)	50 (7,250)		
Thermostat action	Start/Full open K (°F)	350 (170) / 363 (194)		
Firing order		1 - 3 - 4 - 2		
Compression pressure	MPa (psi) at min^{-1}	3.4~3.7 (493~537) at 280		
Fuel injection timing		0°		
Valve clearance		Valve clearance	Open	Close
	Intake valve	0.3 mm at cool	14°before top dead point	30°after bottom dead point
	Exhaust valve	0.45 mm at cool	54°before bottom dead point	13°after top dead point
Starter capacity	V × kW	24 × 5.0		
Generator capacity (Alternator)	V × A	24 × 50		
Cooling fan drive method		ø650 (25.6") × suction type 7 fans, V-belt drive, pulley ratio Crank / Fan= 0.89		
Engine oil quantity	L (gal)	Full level 18.0 (4.76) Low level 15.0 (3.96) Total 20.5 (5.42)		
Dry weight	kg (lbs)	580 (1,280)		
Fuel consumption ratio	g/kW•h (g/ps•h)	217 (160)		
Allowable inclination (Limited by E/G lubrication)		Front / Rear and Right / Left : 35°		
Dimension (L×W×H)	mm (in)	1,063 × 725 × 995 (3ft-5.86in × 28.5in × 39.2in)		
Rotating direction		Counterclockwise seeing from flywheel side		

2-14

2.9.2 ENGINE CHARACTERISTIC CURVE (HINO J05E-TG)

Condition to be measured: The net value is indicated, measuring with cooling fan.
○ marks show the rated point

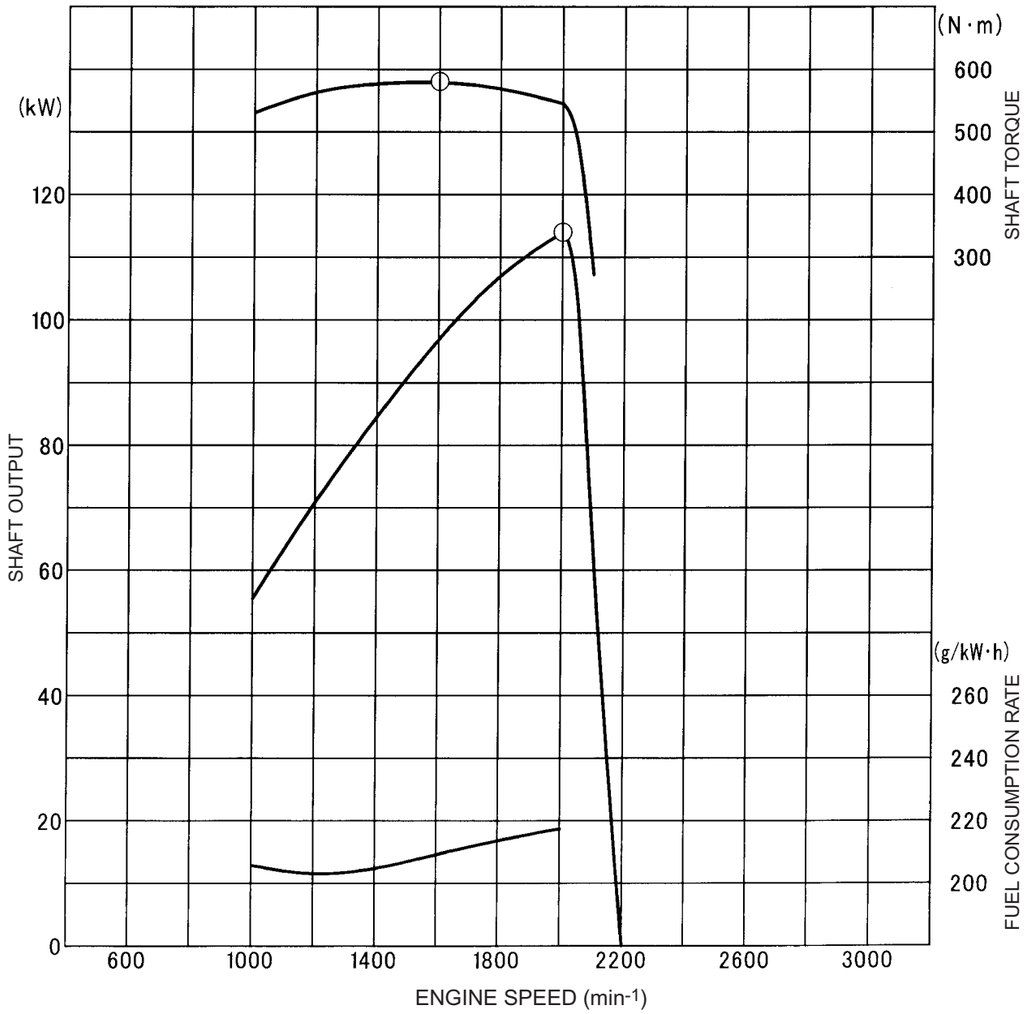

Fuel consumption volume

$$= \frac{\text{Fuel consumption rate}}{0.835 \times 1000} \times \text{kW} \times \text{Load factor } (\alpha)$$

$$= \frac{217\text{g/kW·h}}{0.835 \times 1000} \times 114\text{kW} \times \alpha$$

$$= 29.6\,\alpha \cdot \text{L/h}$$

α : Standard load factor (0.70~0.80)

Fuel consumption in regular operation (load factor 0.70~0.80)
20.7 L/h~23.7 L/h

2. SPECIFICATIONS

2.9.2 ENGINE CHARACTERISTIC CURVE (HINO J05E-TG)

Condition to be measured: The net value is indicated, measuring with cooling fan.
○ marks show the rated point

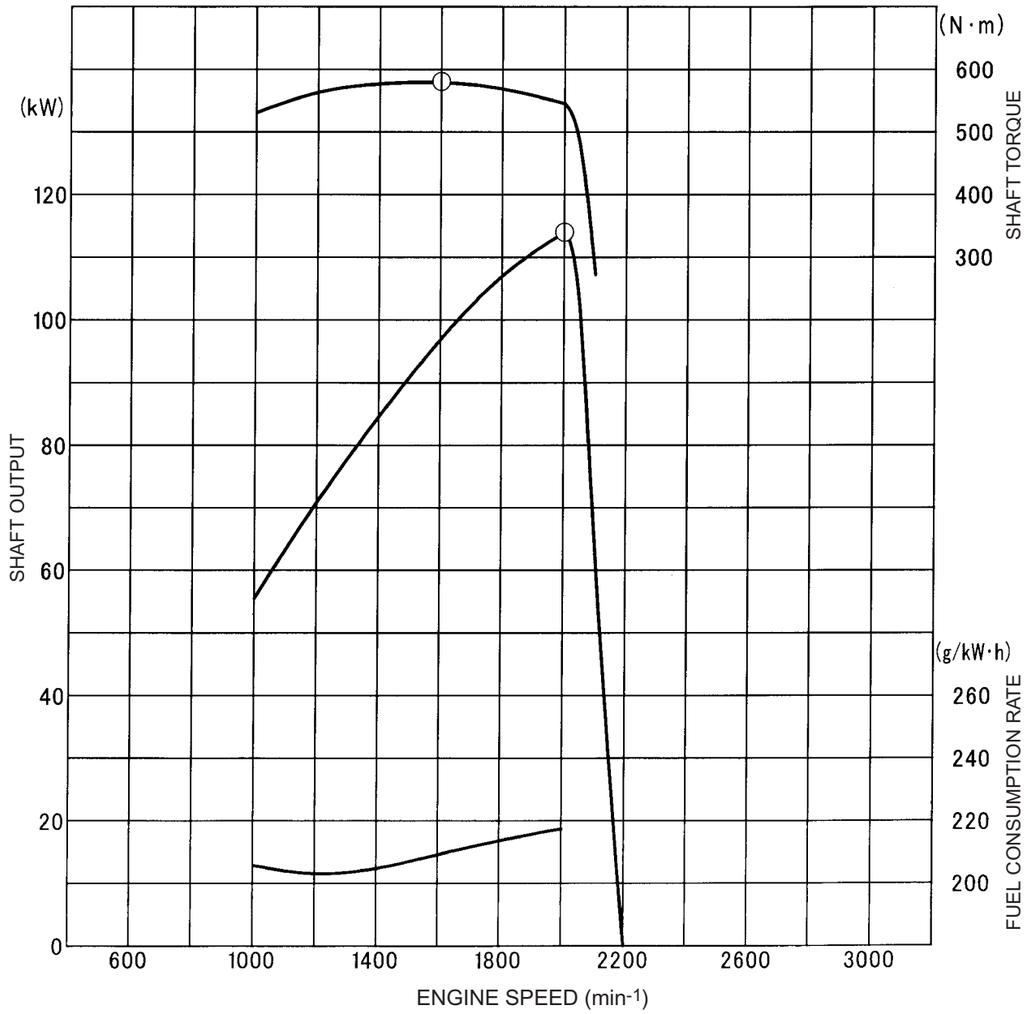

Fuel consumption volume

$$= \frac{\text{Fuel consumption rate}}{0.835 \times 1000} \times \text{kW} \times \text{Load factor } (\alpha)$$

$$= \frac{217\text{g/kW·h}}{0.835 \times 1000} \times 114\text{kW} \times \alpha$$

$$= 29.6\,\alpha \cdot \text{L/h}$$

α : Standard load factor (0.70~0.80)

Fuel consumption in regular operation (load factor 0.70~0.80)
20.7 L/h~23.7 L/h

Product: New Holland E215B/E215BLC Crawler Excavator Service Repair Manual
Full Download: https://www.arepairmanual.com/downloads/new-holland-e215b-e215blc-crawler-excavator-service-repair-manual/

[MEMO]

2. SPECIFICATIONS

[MEMO]

Sample of manual. Download All 992 pages at:
https://www.arepairmanual.com/downloads/new-holland-e215b-e215blc-crawler-excavator-service-repair-manual/

2-16