Product: New Holland E27 Compact Excavators Service Repair Manual
Full Download: https://www.arepairmanual.com/downloads/new-holland-e27-compact-excavators-service-repair-manual/

NEW HOLLAND

COMPACT EXCAVATORS

E27

SERVICE MANUAL

87360159 NA

Issued 01-2006

Sample of manual. Download All 540 pages at:
https://www.arepairmanual.com/downloads/new-holland-e27-compact-excavators-service-repair-manual/

NEW HOLLAND

www.newhollandconstruction.com

Product: New Holland E27 Compact Excavators Service Repair Manual
Full Download: https://www.arepairmanual.com/downloads/new-holland-e27-compact-excavators-service-repair-manual/

NEW HOLLAND

SHOP MANUAL

E27
HYDRAULIC EXCAVATOR

Sample of manual. Download All 540 pages at:
https://www.arepairmanual.com/downloads/new-holland-e27-compact-excavators-service-repair-manual/

87360159NA
Issued January 2006

CNH America, LLC reserves the right to make improvements in design or changes in specifications at any time without incurring any obligation to install them on units previously sold.

All data given in this publication is subject to production variations. Dimensions and weights are only approximate. Illustrations do not necessarily show products in standard condition. For exact information about any particular product, please consult your Dealer

Revision History			
Issue	Issue Date	Applicable Machine	Remarks
First Edition	01-2006	E27	87360159 NA

Issued January 2006
Book/Form Number 87360159 NA
Copyright © 2006. CNH America, LLC. All Rights Reserved.
Printed in U.S.A. • Bur
Source Code No. S5PV0007E01-KO01

SHOP MANUAL
E27
HYDRAULIC EXCAVATOR
TABLE OF CONTENTS

SECTION 1
STANDARD SPECIFICATIONS AND MAINTENANCE
Table of Contents I
(Book/Form Number: 6-80480 NA)

CHAPTER 1
GENERAL INFORMATION AND SAFETY
Table of Contents 1-1
(Book/Form Number: 6-80490 NA)

CHAPTER 2
SPECIFICATIONS
Table of Contents 2-1
(Book/Form Number: 6-80500 NA)

CHAPTER 3
ATTACHMENT DIMENSIONS
Table of Contents 3-1
(Book/Form Number: 6-80510 NA)

CHAPTER 11
TOOLS
Table of Contents 11-1
(Book/Form Number: 6-80520 NA)

CHAPTER 12
STANDARD MAINTENANCE TIME TABLE
Table of Contents 12-1
(Book/Form Number: 6-80530 NA)

CHAPTER 13
MAINTENANCE STANDARDS AND TEST PROCEDURES
Table of Contents 13-1
(Book/Form Number: 6-80540 NA)

SECTION 2
HYDRAULIC, ELECTRICAL, AND COMPONENT SYSTEMS
Table of Contents I
(Book/Form Number: 6-80550 NA)

CHAPTER 22
HYDRAULIC SYSTEM
Table of Contents 22-1
(Book/Form Number: 6-80560 NA)

CHAPTER 23
ELECTRICAL SYSTEM
Table of Contents 23-1
(Book/Form Number: 6-80570 NA)

CHAPTER 24
COMPONENTS SYSTEM
Table of Contents 24-I
(Book/Form Number: 6-80580 NA)

SECTION 3
DISASSEMBLY AND ASSEMBLY
Table of Contents I
(Book/Form Number: 6-80590 NA)

CHAPTER 31
GENERAL DISASSEMBLY AND ASSEMBLY
Table of Contents 31-1
(Book/Form Number: 6-80600 NA)

CHAPTER 32
ATTACHMENTS
Table of Contents 32-1
(Book/Form Number: 6-80610 NA)

CHAPTER 33
UPPER SLEWING STRUCTURE
Table of Contents 33-1
(Book/Form Number: 6-80620 NA)

CHAPTER 34
TRAVEL SYSTEM
Table of Contents 34-1
(Book/Form Number: 6-80630 NA)

SECTION 4
TROUBLESHOOTING
Table of Contents I
(Book/Form Number: 6-80640 NA)

CHAPTER 42
TROUBLESHOOTING (HYDRAULIC SYSTEM)
Table of Contents 42-1
(Book/Form Number: 6-80650 NA)

CHAPTER 43
TROUBLESHOOTING (ELECTRICAL SYSTEM)
Table of Contents 43-1
(Book/Form Number: 6-80660 NA)

CHAPTER 44
TROUBLESHOOTING (ENGINE)
Table of Contents 44-1
(Book/Form Number: 6-80670 NA)

SECTION 5
ENGINE
Table of Contents I
(Book/Form Number: 6-80680 NA)

CHAPTER 51
THIS MANUAL EXPLAINS THE ENGINE PROPER AND IS FAITHFUL TO
YANMAR DIESEL ENGINE'S SERVICE MANUALS.
. 1
(Book/Form Number: 6-80460 NA)

NEW HOLLAND

SHOP MANUAL - SECTION 1

E27
HYDRAULIC EXCAVATORS

STANDARD SPECIFICATIONS AND MAINTENANCE

Issued January 2006
Book/Form Number 6-80480 NA
Copyright © 2006. CNH America, LLC. All Rights Reserved.
Printed in U.S.A. • Bur
Source Code No. S5PV0007E01-KO01

CNH America, LLC reserves the right to make improvements in design or changes in specifications at any time without incurring any obligation to install them on units previously sold.

All data given in this publication is subject to production variations. Dimensions and weights are only approximate. Illustrations do not necessarily show products in standard condition. For exact information about any particular product, please consult your Dealer

Revision History			
Issue	Issue Date	Applicable Machines	Remarks
First Edition	01-2006	E27	6-80480 NA

SECTION 1
STANDARD SPECIFICATIONS AND MAINTENANCE

TABLE OF CONTENTS

CHAPTER 1
GENERAL INFORMATION AND SAFETY
TABLE OF CONTENTS 1-1
1.1 General Safety Information 1-3
1.2 Safety Precautions. 1-4
1.3 General Precautions for Repairs 1-6
1.4 International Unit Conversion System 1-9

CHAPTER 2
SPECIFICATIONS
TABLE OF CONTENTS 2-1
2.1 Components Name 2-3
2.2 Machine Dimensions 2-4
2.3 Specifications and Performance 2-6
2.4 Machine and Components Weights (Dry) 2-7
2.5 Transportation 2-8
2.6 Type of Track Shoes 2-10
2.7 Type of Bucket. 2-10
2.8 Engine Specifications 2-11

CHAPTER 3
ATTACHMENT DIMENSIONS
TABLE OF CONTENTS 3-1
3.1 Boom 3-3
3.2 Arm 3-7
3.3 Bucket 3-12
3.4 Dozer 3-14
3.5 Swing 3-17

CHAPTER 11
TOOLS
TABLE OF CONTENTS 11-1
11.1 Torque Specifications for Capscrews and Nuts. 11-3
11.2 Screw and Tool Sizes 11-5
11.3 Torque Specifications for Joints and Hoses 11-6
11.4 Torque Specifications for Sleeve Type Tube Fittings 11-7
11.5 Plugs 11-8
11.6 Special Spanners for Tubes 11-10
11.7 Special Tools 11-11
11.8 Application of Screw Locking and Sealing Compounds 11-11
11.9 Counterweight Lifting Jig 11-12
11.10 Upper Frame Lifting Jig 11-13

CHAPTER 12
STANDARD MAINTENANCE TIME TABLE
TABLE OF CONTENTS 12-1
12.1 Working Standards for Time Tables 12-3
12.2 Time Tables. 12-4

CHAPTER 13

MAINTENANCE STANDARDS AND TEST PROCEDURES

TABLE OF CONTENTS

13-1
13.1 How To Use Maintenance Standards and Precautions . . . 13-3
13.2 Performance Inspection Standard Tables . . . 13-4
13.3 Measuring Engine Speed . . . 13-6
13.4 Measuring Hydraulic Oil Pressure . . . 13-8
13.5 Measuring Travel Performances . . . 13-11
13.6 Measuring Slew Performances . . . 13-13
13.7 Measuring Attachment Operating Performances . . . 13-15
13.8 Measuring Slew Bearing Performances . . . 13-17
13.9 Measuring Track Tension . . . 13-18

CHAPTER 1

E27
HYDRAULIC EXCAVATORS

GENERAL INFORMATION AND SAFETY

Issued January 2006
Book/Form Number 6-80490 NA
Copyright © 2006. CNH America, LLC. All Rights Reserved.
Printed in U.S.A. • Bur
Source Code No. S5PV0007E01-KO01

CNH America, LLC reserves the right to make improvements in design or changes in specifications at any time without incurring any obligation to install them on units previously sold.

All data given in this publication is subject to production variations. Dimensions and weights are only approximate. Illustrations do not necessarily show products in standard condition. For exact information about any particular product, please consult your Dealer

Revision History			
Issue	Issue Date	Applicable Machines	Remarks
First Edition	01-2006	E27	6-80490 NA

CHAPTER 1
GENERAL INFORMATION AND SAFETY
TABLE OF CONTENTS

1.1 GENERAL SAFETY INFORMATION

1.2 SAFETY PRECAUTIONS

1.3 GENERAL PRECAUTIONS FOR REPAIRS
1.3.1 Preparation Before Disassembling 1-6
1.3.2 Safety In Disassembling and Assembling 1-6
1.3.3 Disassembling and Assembling Hydraulic Equipment 1-6
1.3.4 Electrical Equipment 1-7
1.3.5 Hydraulic Parts 1-8
1.3.6 Welding Repair 1-8
1.3.7 Environmental Protection 1-8

1.4 INTERNATIONAL UNIT CONVERSION SYSTEM
Introduction 1-9

NOTES

1.1 GENERAL SAFETY INFORMATION

WARNING: *Do not operate or perform any maintenance on this machine until all instructions in the OPERATOR'S MANUAL and this MANUAL have been thoroughly read and understood.*

WARNING: *Improper operation or maintenance of this machine may cause accidents and could result in serious injury or death.*

WARNING: *Always keep the manual in storage.*
If it is missing or damaged, place an order with an authorized Distributor for a replacement.
If you have any questions, please consult your dealer.

1. Most accidents, which occur during operation, are due to neglect of precautionary measures and safety rules. Sufficient care should be taken to avoid these accidents. Erroneous operation, lubrication or maintenance services are very dangerous and may cause injury or death of personnel. Therefore all precautionary measures, NOTES, DANGERS, WARNINGS and CAUTIONS contained in the manual and on the machine should be read and understood by all personnel before starting any work with or on the machine.
2. Operation, inspection, and maintenance should be carefully carried out, safety must be given the first priority. The safety information contained in the manual is intended only to supplement safety codes, insurance requirements, local laws, rules and regulations.
3. Messages of safety appear in the manual and on the machine:

   All messages of safety are identified by either word of DANGER, WARNING, and CAUTION.

DANGER: *Shows an imminently hazardous situation which, if not avoided, will result in death or serious injury.*

WARNING: *Shows a potentially hazardous situation which, if not avoided, could result in death or serious injury.*

CAUTION: *Shows a potentially hazardous situation which, if not avoided, may result in minor or moderate injury. It may also be used to alert against possible damage to the machine and its components.*

4. It is very difficult to foresee every danger that may occur during operation. However, safety can be ensured by fully understanding proper operating procedures for this machine according to methods recommended.
5. While operating the machine, be sure to perform work with great care, so no damage to the machine or accidents will occur.
6. Continue studying the manual until all Safety, Operation and Maintenance procedures are completely understood by all persons working with the machine.

1.2 SAFETY PRECAUTIONS

WARNING: *The proper lubrication and maintenance for this machine are outlined in the OPERATOR'S MANUAL.*

WARNING: *Improper lubrication and maintenance procedures are dangerous and could result in injury or death. Read and understand the MANUAL before performing maintenance or adding/changing lubricants.*

The serviceman may be unfamiliar with many of the systems on this machine. This makes it important to use caution when performing service work. A knowledge of the system and or components is important before the removal or disassembly of any component.

Because of the size of some of the machine components, the serviceman should check the weights noted in this manual. Use proper lifting procedures when removing any components. Weight of components table is shown in the SPECIFICATIONS section.

The following is a list of basic precautions that must always be observed.

1. Read and understand all Warning plates and decals on the machine before Operating, Maintaining or Repairing machine.
2. Always wear protective glasses and protective shoes when working around machines. Wear protective glasses when using hammers, punches or drifts on any part of the machine or attachments. Use welders gloves, hood/goggles, apron and the protective clothing appropriate to the welding job being performed. Do not wear loose fitting or torn clothing. Remove all rings from fingers, loose jewelry, confine long hair and loose clothing before working on this machinery.
3. Disconnect the battery and hang a "Do Not Operate" tag in the Operators Compartment. Remove ignition keys.
4. If possible, make all repairs with the machine parked on a level, hard surface. Block the machine so it does not roll while working on or under the machine. Hang a "Do Not Operate" tag in the Operators Compartment.
5. Do not work on any machine that is supported only by jacks or a hoist. Always use blocks or jack stands capable of supporting the machine.

WARNING: *Do not operate this machine unless you have read and understand the instructions in the OPERATOR'S MANUAL. Improper machine operation is dangerous and could result in injury or death.*

6. Relieve all pressure in air, oil or water systems before any lines, fittings or related items are disconnected or removed. Always make sure all raised components are blocked correctly and be alert for possible pressure when disconnecting any device from a system that utilizes pressure.
7. Lower the bucket, dozer, or other attachments to the ground before performing any work on the machine. If this cannot be done, make sure the bucket, dozer, ripper or other attachment is blocked correctly to prevent it from dropping unexpectedly.
8. Use steps and grab handles when mounting or dismounting a machine. Clean any mud or debris from steps, walkways or work platforms before using. Always face to the machine when using steps, ladders and walkways. When it is not possible to use the designed access system, provide ladders, scaffolds, or work platforms to perform safe repair operations.
9. To avoid back injury, use a hoist when lifting components which weigh 20kg (45lbs) or more. Make sure all chains, hooks, slings, etc., are in good condition and are the correct capacity. Be sure hooks are positioned correctly. Lifting eyes are not to be side loaded during a lifting operation.
10. To avoid burns, be alert for hot parts on machines which have just been stopped and hot fluids in lines, tubes and compartments.
11. Be careful when removing cover plates. Gradually back off the last two capscrews or nuts located at opposite ends of the cover or device and carefully pry cover loose to relieve any spring or other pressure, before removing the last two capscrews or nuts completely.
12. Be careful when removing filler caps, breathers and plugs on the machine. Hold a rag over the cap or plug to prevent from being sprayed by liquids under pressure. The danger is even greater if the machine has just been stopped because fluids can be hot.

13. Always use the proper tools that are in good condition and that are suited for the job. Be sure you understand how to use them before performing any service work.
14. Reinstall all fasteners with the same part number. Do not use a lesser quality fastener if replacements are necessary.
15. Repairs which require welding should be performed by personnel adequately trained and knowledgeable in welding procedures. Determine type of metal being welded and select correct welding procedure and electrodes, rods or wire to provide a weld strength equivalent at least to that of the parent metal. Make sure to disconnect battery before any welding procedures are attempted.
16. Do not damage wiring during removal operations. Reinstall the wiring so it will not be damaged during operation of the machine by contacting sharp corners, or by rubbing against some object or hot surface.
17. Be sure all protective devices including guards and shields are properly installed correctly before starting repair. If a guard or shield must be removed to perform the repair work, replace the guard or shield after repair is completed.
18. Performing maintenance or repair work with the bucket raised is dangerous due to the possibility of it falling. Lower the attachment and place the bucket on the ground before starting the work.
19. Loose or damaged fuel, lubricant and hydraulic lines, tubes and hoses can cause fires. Do not bend or strike high pressure lines or install ones which have been bent or damaged. Inspect lines, tubes and hoses carefully. Do not check for leaks with your hands. Very small (pinhole) leaks can result in a high velocity oil stream that will be invisible close to the hose. This oil can penetrate the skin and cause personal injury. Use cardboard or paper to locate pinhole leaks.
20. Tighten connections to the correct torque. Make sure that all heat shields, clamps and guards are installed correctly to avoid excessive heat, vibration or rubbing against other parts during operation. Shields that protect against oil spray onto hot exhaust components in event of a line, tube or seal failure must be installed correctly.
21. Do not operate a machine if any rotating part is damaged or contacts any other part during operation. Any high speed rotating component that has been damaged or altered should be checked for balance before reusing.
22. Be careful when servicing or separating the tracks. Chips can fly when removing or installing a track pin. Wear safety glasses and long sleeve protective clothing. Tracks can unroll very quickly when separated. Keep away from front and rear of machine. The machine can move unexpectedly when both tracks are disengaged from the sprockets. Block the machine to prevent it from moving.

1.3 GENERAL PRECAUTIONS FOR REPAIRS

1.3.1 PREPARATION BEFORE DISASSEMBLING

1. Understand operating procedure

   Read OPERATOR'S MANUAL and this MANUAL carefully prior to operating the machine.

2. Cleaning machines

   Remove soil, mud, and dust from the machine before service. This will prevent loss of work efficiency, damaged parts, and difficulty in rust prevention and dust protection while reassembling.

3. Inspecting machines

   Identify the parts to be disassembled before starting work, determine the disassembling procedure considering the workshop situations etc., request necessary parts in advance.

4. Record the following items
   A. Inspection date and place
   B. Model name, applicable machine number, and hour meter reading
   C. Trouble condition, place and cause.
   D. Visible oil leakage, water leakage and damage
   E. Clogged filters, oil level, oil quality, oil contamination and loose connections
   F. Is it a recurring fault at approximately the same amount of operating hours.

5. Arrangement and cleaning in service shop
   A. Tools required for repair work.
   B. Prepare space to place the disassembled parts.
   C. Prepare oil containers for draining oil etc.

1.3.2 SAFETY IN DISASSEMBLING AND ASSEMBLING

1. Wear appropriate clothes with long sleeves, safety shoes, safety helmet and protective glasses.
2. Suspend warning tag DO NOT OPERATE from the doorknob or the operating lever.
3. Stop the engine before starting inspection and maintenance.
4. Identify the location of a first-aid kit and a fire extinguisher, also who to contact in case of an emergency.
5. Choose a hard, level and safe place, and place the attachment on the ground securely.
6. Use a hoist to remove heavy parts (20 kg [45 lbs] or more) from the machine.
7. Use proper tools, and replace or repair defective tools.
8. Support the machine and attachment with supports or blocks if the work is performed in the lifted condition.

1.3.3 DISASSEMBLING AND ASSEMBLING HYDRAULIC EQUIPMENT

1. Removing hydraulic equipment
   A. Before disconnecting pipes, release the hydraulic pressure in the system.
   B. Carefully drain oil of the removed pipes into a containers without spilling on the floor.
   C. Install plugs or caps on the pipe ends to avoid oil spillage and contamination.
   D. Clean off the external surface of the equipment before disassembling, drain hydraulic and gear oil before placing component on the workbench.
2. Disassembling hydraulic equipment
   A. Do not modify the hydraulic equipment without the permission of the manufacturer. Manufacturer will not be responsible for the performance and function of the product after modification.
   B. When disassembling and reassembling for repair, refer the work to qualified personnel who have the knowledge or have completed the service training.
   C. Provide aligning marks to facilitate reassembly.
   D. Before starting the work, read the manual for disassembly procedures and decide whether the work can be performed by yourself or if assistance is required.
   E. Use the special jig or tools if they are specified.

F. If it is hard to remove a part according to the procedure, do not force it, investigate the cause.

G. Place the removed parts in order and attach tags to facilitate the reassembly.

H. Note the location and quantity of parts commonly applied to multiple locations.

3. Inspecting parts

A. Ensure that the disassembled parts are free from seizure, interference and uneven contact.

B. Measure and record wear condition of parts and clearance.

C. If the problem is found in a part, repair or replace it.

4. Reassembling hydraulic equipment

A. Turn ON the ventilation fan or open windows to maintain good ventilation prior to cleaning parts.

B. Perform rough and finish cleaning before assembling.

C. Remove solvent by air and apply clean hydraulic or gear oil for assembling.

D. Always replace the removed O-rings, backup rings and oil seals with new ones by applying grease in advance.

E. Remove dirt and moisture from and perform degreasing on the surface where liquid gasket are to be applied.

F. Remove rust preventive agent from the new parts before use.

G. Fit bearings, bushings and oil seals using proper tools.

H. Assemble the parts utilizing matching marks.

I. Ensure all the parts are completely assembled after the work.

5. Installing hydraulic equipment

A. Ensure hydraulic oil and lubricants are at proper levels.

B. Perform air bleeding when:
- Hydraulic oil changed
- Parts of suction piping replaced
- Hydraulic pump installed
- Slewing motor installed
- Travel motor installed
- Hydraulic cylinder installed

WARNING: *Operation of the hydraulic equipment without filling hydraulic oil or lubricant or without performing air bleeding will result in damage to the equipment.*

C. Perform air bleeding of the hydraulic pump and slewing motor after loosening the upper drain plug, start and run the engine at low idle.

Air bleeding is completed when clear hydraulic oil is visible, tighten plug.

D. Perform air bleeding of the travel motor and the hydraulic cylinders by running the engine for more than 5 minutes at low speed without load.

NOTE: *Do not allow hydraulic cylinders to bottom out on the stroke end just after maintenance.*

E. Perform air bleeding of pilot line by performing a series of digging, slewing and travel operations.

F. Check hydraulic oil level after placing the attachment to the oil check position, and replenish oil if necessary.

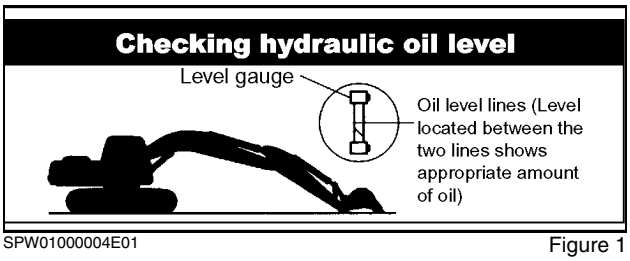

SPW01000004E01 Figure 1

1.3.4 ELECTRICAL EQUIPMENT

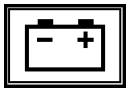

1. Turn the key OFF prior to connecting and disconnecting connectors.
2. Disconnect the connector by holding it and pressing the lock. Do not pull on the wires to separate connectors.
3. Connect the connector and ensure it is completely locked.
4. Turn the key OFF prior to touching the terminal of starter or generator.
5. Remove the ground terminal of battery when handling tools around the battery or its relay.
6. Do not splash water on the electrical equipment and connectors during machine washing.

7. Check for moisture inside the waterproof connector after disconnection it. If moisture is found, dry it completely before reconnecting.

WARNING: *Battery electrolyte is hazardous.*
Battery electrolyte is diluted sulfuric acid. Exposure of skin or eyes will cause burning or loss of eyesight.
If the exposure occurs, take the following emergency measures and seek the advice of a medical specialist.

- *When skin exposed:*
  Wash with water and soap sufficiently.
- *When eyes exposed:*
  Immediately wash away with water continuously for more than 10 minutes.
- *If a large spill occurs:*
  Neutralize with sodium bicarbonate or wash away with water.
- *When swallowed:*
  Drink a large amount of milk or water.
- *When clothes exposed:*
  Immediately undress and wash.

1.3.5 HYDRAULIC PARTS

1. O-ring
   - Make sure O-rings have elasticity and are not damaged before use.
   - Use the appropriate O-rings. O-rings are made of various kinds of materials having different hardness to apply to a variety of parts, such as the part for moving or fixed portion, subjected to high pressure, and exposed to corrosive fluid, even if the size is the same.
   - Install the O-rings without distortion.
   - Replace floating seals as a pair.
2. Flexible hose
   - Use approved parts.
   - Tighten the fitting at the specified torque.
   - Ensure no kinks, tension, interference nor oil leakage are present.

1.3.6 WELDING REPAIR

1. Refer welding repair to qualified personnel.
2. Disconnect the ground cable of the battery before starting the repair. Failure to do so will cause damage to the electrical equipment.
3. Move away the articles in advance that may cause fire if exposed to sparks.
4. Before starting the repair of the attachment, cover the plated surface of the piston rod with flameproof sheet to prevent it from being exposed to sparks.

1.3.7 ENVIRONMENTAL PROTECTION

1. Run the engine in a place that has sufficient ventilation.
2. Industrial waste disposal

   Dispose of the following parts according to the relevant regulations:
   - Waste oil and waste container
   - Battery
3. Precautions for handling hydraulic oil
   Exposure of eyes to hydraulic oil will cause inflammation. Wear protective glasses before handling to avoid an accident. If eyes are exposed to the oil, take the following emergency measures:

   When eyes are exposed:
   - Immediately wash away with water until stimulative feeling vanishes.

   When swallowed:
   - Do not let vomit, seek medical treatment immediately.

   When skin exposed:
   - Wash with water and soap sufficiently.
4. Others

   Use genuine replacement parts and lubricants authorized by the manufacturer.

1.4 INTERNATIONAL UNIT CONVERSION SYSTEM

INTRODUCTION

NOTE: *Information based on MARKS' STANDARD HANDBOOK FOR MECHANICAL ENGINEERS*

Although this manual includes International System of Unit and Foot-Pound System of Units, if you need SI unit, refer to the following international system of units.

Given is an excerpt of the units that are related to this manual.

1. Etymology of SI Unites

   French: Le Systeme International d' Unites

   English: International System of Units

2. Construction of SI Unit System

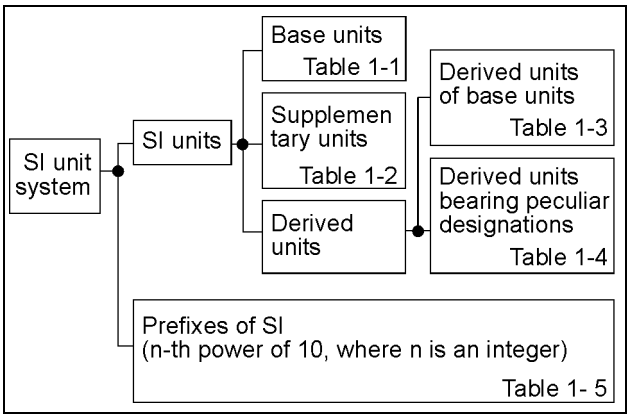

SPW01000007E01 Figure 2

1. Base units

QUANTITY	UNIT	SYMBOL
Length	meter	m
Mass	kilogram	kg
Time	second	s
Electric current	ampere	A
Thermodynamic temperature	kelvin	K
Amount of substance	mol	mol
Luminous intensity	candela	cd

2. Derived Units

QUANTITY	UNIT	SYMBOL
Area	square meter	m^2
Volume	cubic meter	m^3
Velocity	meter per second	m/s
Acceleration	meter per second squared	m/s^2
Density	kilogram per cubic meter	kg/m^3

3. Supplementary units

QUANTITY	UNIT	SYMBOL
Plane angle	radian	rad
Solid angle	steradian	sr

4. Derived Units bearing Peculiar Designations

QUANTITY	UNIT	SYMBOL	FORMULA
Frequency	hertz	Hz	1/s
Force	newton	N	$kg \cdot m/s^2$
Pressure and Stress	pascal	Pa	N/m^2
Energy, Work and Quantity of heat	joule	J	N·m
Power	watt	W	J/s
Quantity of electricity	coulomb	C	A·s
Electric potential difference, Voltage, and Electromotive force	volt	V	W/A
Quantity of static electricity and Electric capacitance	farad	F	C/V
Electric resistance	ohm	Ω	V/A
Celsius temperature	Celsius degree or degree	°C	(t+273.15)K
Illuminance	lux	lx	$l\ m/m^2$

5. Prefixes of SI

PREFIX	SYMBOL	MULTIPLICATION FACTORS
giga	G	10^9
mega	M	10^6
kilo	k	10^3
hecto	h	10^2
deca	da	10
deci	d	10^{-1}
centi	c	10^{-2}
milli	m	10^{-3}
micro	m	10^{-6}
nano	n	10^{-9}
pico	p	10^{-12}

6. Unit Conversion

QUANTITY	GRAVITATIONAL	SI	CONVERSION FACTOR
Mass	kg	kg	
Force	kgf	N	1 kgf=9.807 N
Torque	kgf·m	Nm	kgf m=9.807 Nm
Pressure	kgf/cm^2	MPa	1 kgf/cm^2=0.09807 MPa
Motive Power	PS	kW	1 PS=0.7355 kW
Revolution	rpm	min^{-1}	r/min *1
*1 Units that are allowed to use.			

CHAPTER 2

E27
HYDRAULIC EXCAVATORS

SPECIFICATIONS

Issued January 2006
Book/Form Number 6-80500 NA
Copyright © 2006. CNH America, LLC. All Rights Reserved.
Printed in U.S.A. • Bur
Source Code No. S5PV0007E01-KO02

CNH America, LLC reserves the right to make improvements in design or changes in specifications at any time without incurring any obligation to install them on units previously sold.

All data given in this publication is subject to production variations. Dimensions and weights are only approximate. Illustrations do not necessarily show products in standard condition. For exact information about any particular product, please consult your Dealer

Revision History			
Issue	Issue Date	Applicable Machines	Remarks
First Edition	01-2006	E27	6-80500 NA

CHAPTER 2
SPECIFICATIONS
TABLE OF CONTENTS

2.1 COMPONENTS NAME

2.2 MACHINE DIMENSIONS

2.3 SPECIFICATIONS AND PERFORMANCE
2.3.1 Speed and Grade ability 2-6
2.3.2 Engine 2-6
2.3.3 Hydraulic Components 2-6
2.3.4 Side Digging and Dozer 2-6
2.3.5 Weight 2-6

2.4 MACHINE AND COMPONENTS WEIGHTS (DRY)

2.5 TRANSPORTATION
2.5.1 Loading Machine on a Trailer 2-8
2.5.2 Transportation Dimension and Weight of Attachment 2-8
2.5.2.1 Boom with Arm Cylinder 2-8
2.5.2.2 Arm and Bucket (Standard Bucket) 2-8
2.5.2.3 Arm 2-9
2.5.2.4 Bucket (Standard Bucket) 2-9
2.5.2.5 Dozer (Without Cylinder Weight) 2-9

2.6 TYPE OF TRACK SHOES

2.7 TYPE OF BUCKET

2.8 ENGINE SPECIFICATIONS
2.8.1 Specifications 2-11
2.8.2 Engine Performance Curve 2-12

NOTES

2.1 COMPONENTS NAME

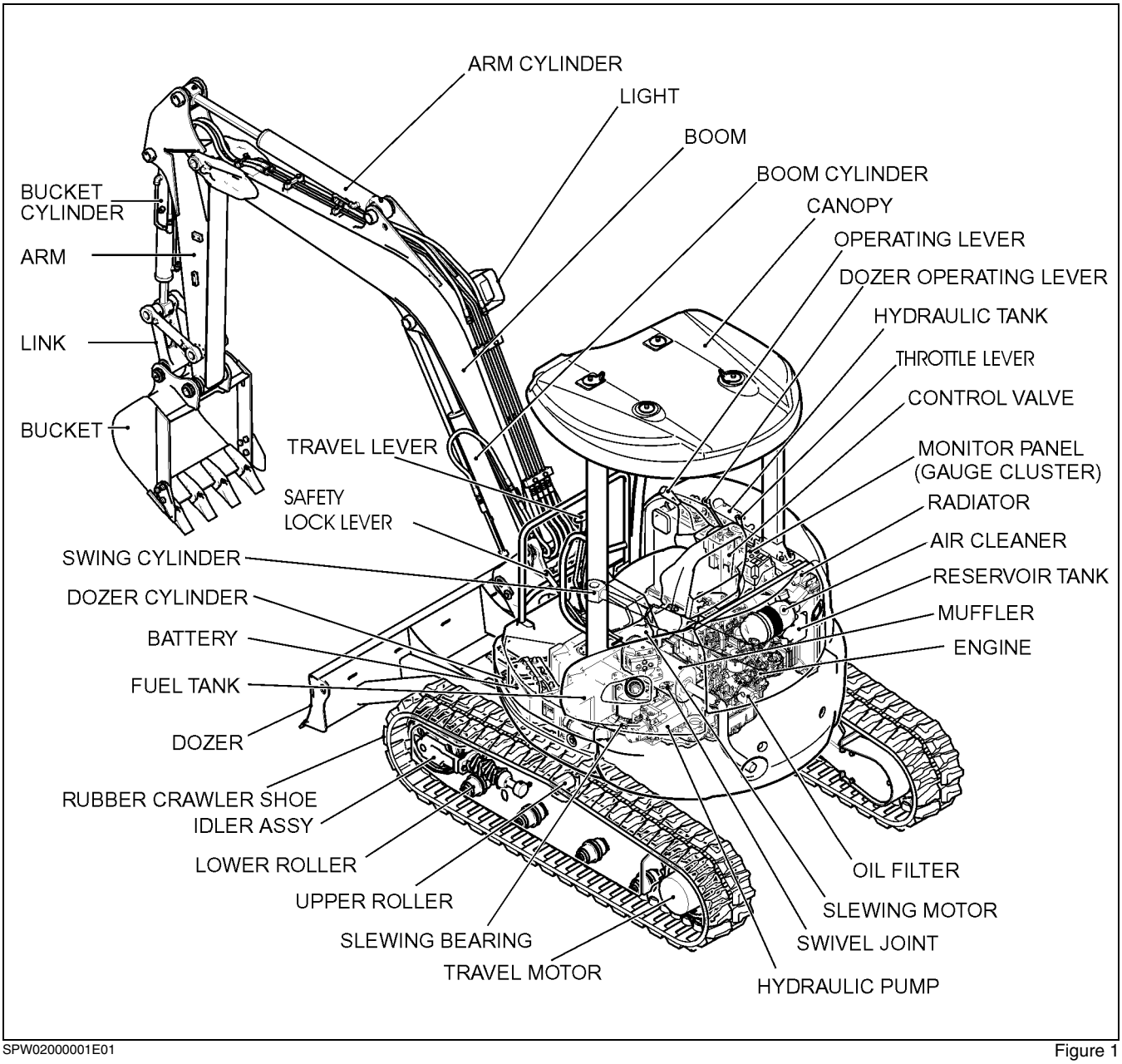

SPW02000001E01

Figure 1

2.2 MACHINE DIMENSIONS

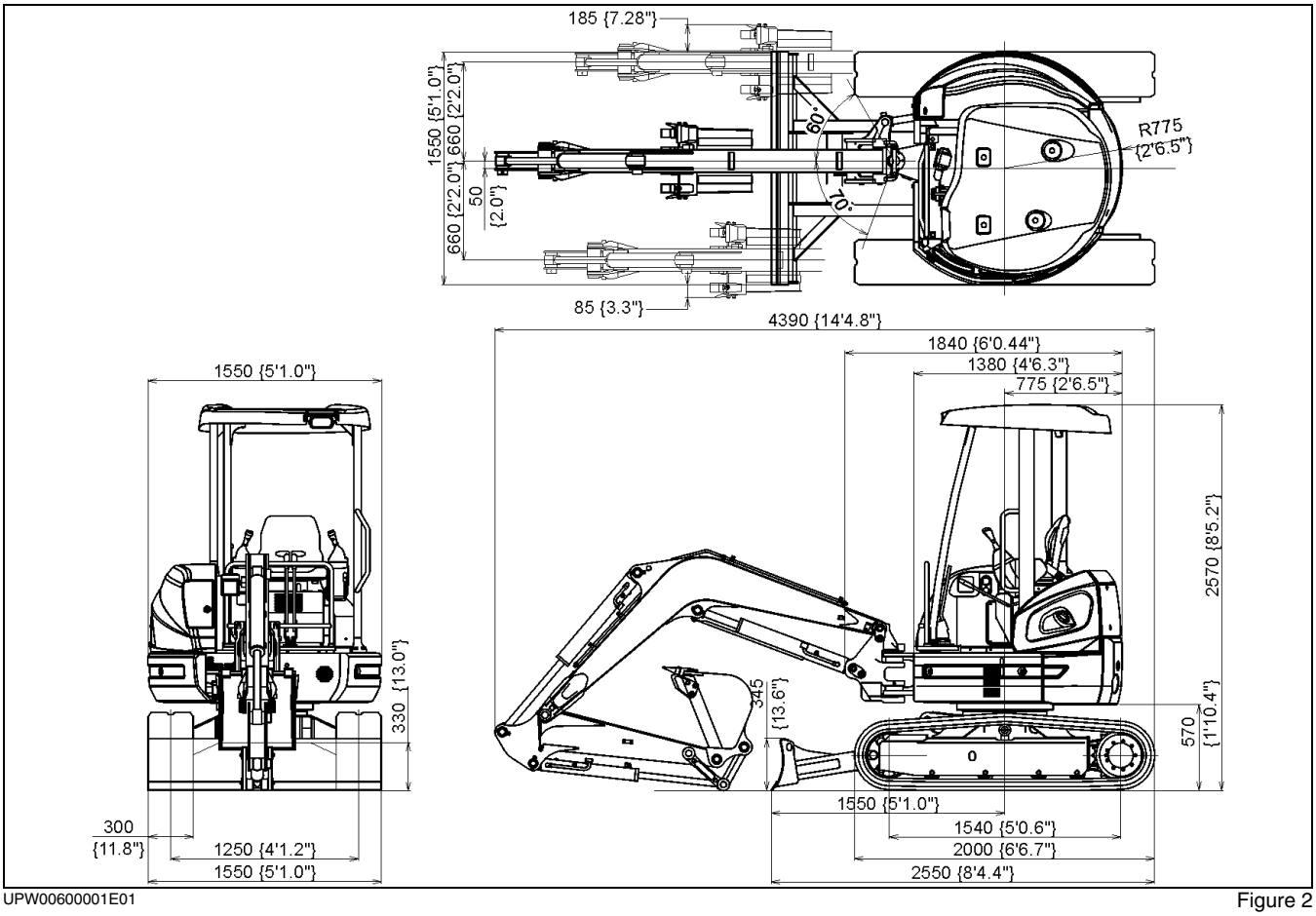

UPW00600001E01

Figure 2

(1) (CANOPY) UNIT: MM (FT•IN)

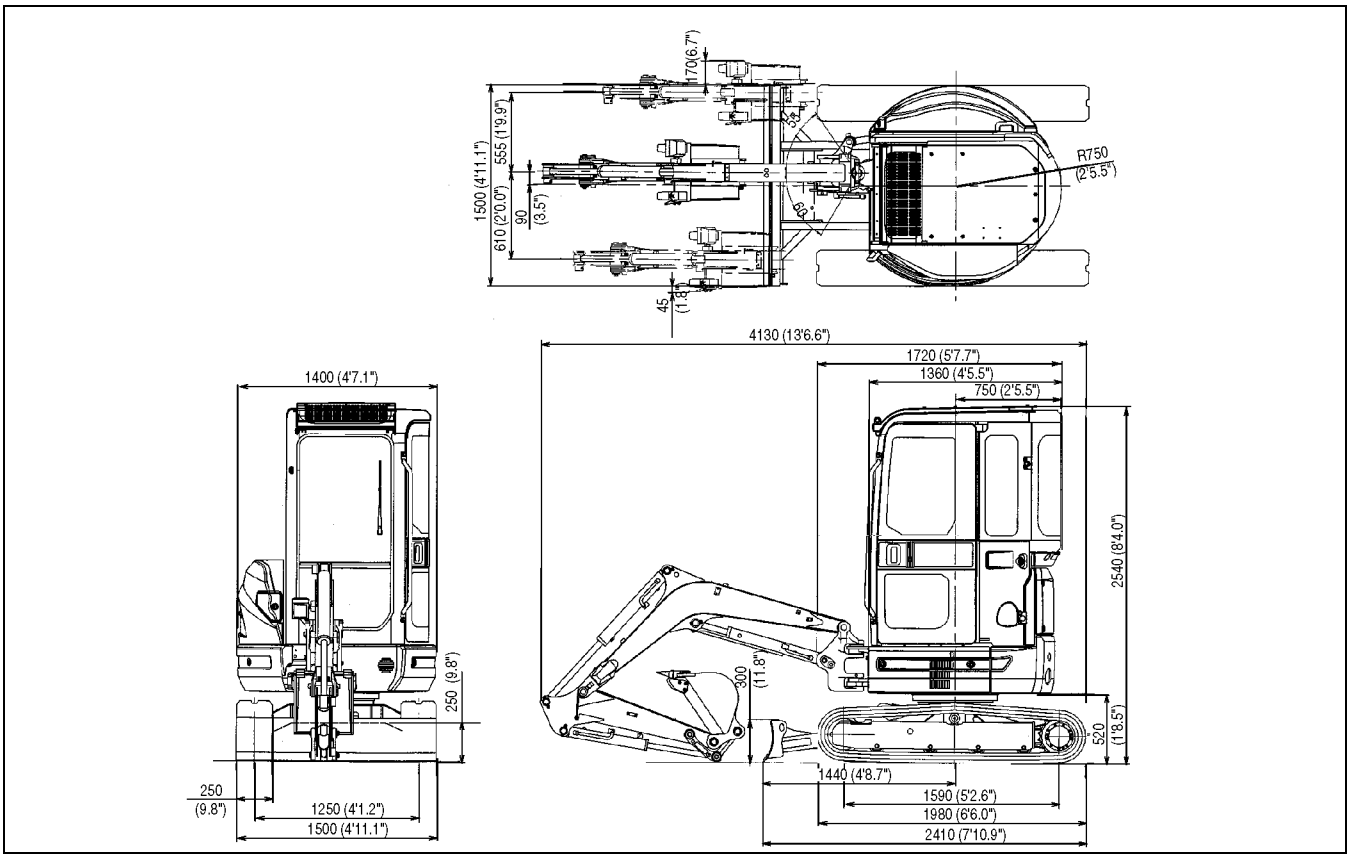

SPV02000002E01

Figure 3

(2) (CAB) UNIT: MM (FT•IN)

2.3 SPECIFICATIONS AND PERFORMANCE

2.3.1 SPEED AND GRADE ABILITY

Applicable Machines		PV10-27001~			
Shoe Type		Rubber shoe		steel shoe (OPT)	
Slewing Speed	min^{-1} {rpm}	8.7 {8.7}			
Travel Speed	km/h (mph)	Low (1st)	High (2nd)	Low (1st)	High (2nd)
		2.3	4.1	2.3	4.1
Grade ability	% (degree)	58(30)			

2.3.2 ENGINE

Model (YANMAR)		3TNV82A-SYB
Type		Water-cooled, 4-cycle type Swirl chamber type diesel engine
Number of cylinders-Bore x Stroke		3 - ø82 mm x 84 mm (3.23 in x 3.31 in)
Total Displacement	L	1.330 (81.2 cu in)
Output Rating	kW/min^{-1} {PS/rpm}	15.9/2,200 {21.6/2,200}
Maximum Torque	Nm/min^{-1} (lbf•ft/rpm)	79.0~86.0/1,320±100 (58.3~63.4/1,320±100)
Starting Motor	V x kW	12 x 1.7
Generator	V x A	12 x 40

2.3.3 HYDRAULIC COMPONENTS

Hydraulic Pump	Variable displacement axial piston + gear pump
Hydraulic Motor	Axial piston
Hydraulic Motor w/Reducer (Travel)	2-Axial piston, 2-Speed motor
Control Valve	10-spool multiple control valve
Cylinder (Boom, Arm, Swing, Bucket, Dozer)	Double action cylinder
Return Filter	Safety valve containing/Filter Type (30)

2.3.4 SIDE DIGGING AND DOZER

Type		**Boom swing by hydraulic cylinder**
Boom Swing Angle	Right	55°
	Left	60°
Stroke of Dozer (above/below)	mm (in)	445 / 335 (17.5/13.2)

2.3.5 WEIGHT

		RUBBER SHOE	**STEEL SHOE**
Machine Weight	kg (lb)	2,490 (5490)	2,620 (5780)
Upper slewing body	kg (lb)	1,310 (2890)	1,310 (2890)
Travel system	kg (lb)	830 (1830)	960 (2120)
Attachment (Boom + STD Arm + STD Bucket)	kg (lb)	300 (660)	
Oil & Water	kg (lb)	50 (110)	
NOTE 1: *This figure is calculated with standard bucket.*			

Product: New Holland E27 Compact Excavators Service Repair Manual
Full Download: https://www.arepairmanual.com/downloads/new-holland-e27-compact-excavators-service-repair-manual/

2.4 MACHINE AND COMPONENTS WEIGHTS (DRY)

	RUBBER SHOE Unit; kg (lb)		STEEL SHOE Unit; kg (lb)	
	CANOPY	CAB	CANOPY	CAB
COMPLETE MACHINE	2,520 (5560)	2,660 (5870)	2,650 (5840)	2,790 (6150)
UPPER FRAME ASSEMBLY	1,310 (2890)	1,450 (3200)	1,310 (2890)	1,450 (3200)
UPPER FRAME	265 (584)	265 (584)	265 (584)	265 (584)
CANOPY / CAB	120 (265)	250 (550)	120 (265)	250 (550)
ENGINE	130 (287)	130 (287)	130 (287)	130 (287)
HYDRAULIC PUMP	18 (40)	18 (40)	18 (40)	18 (40)
RADIATOR	3 (7)	3 (7)	3 (7)	3 (7)
HYDRAULIC TANK	30 (66)	30 (66)	30 (66)	30 (66)
FUEL TANK	4 (9)	4 (9)	4 (9)	4 (9)
SWING BRACKET	59 (130)	59 (130)	59 (130)	59 (130)
SWING CYLINDER	23 (51)	23 (51)	23 (51)	23 (51)
SLEWING MOTOR	32 (71)	32 (71)	32 (71)	32 (71)
CONTROL VALVE	24 (53)	24 (53)	24 (53)	24 (53)
COUNTERWEIGHT	290 (639)	290 (639)	290 (639)	290 (639)
GUARD • BONNET	97 (214)	97 (214)	97 (214)	97 (214)
BOOM CYLINDER	24 (53)	24 (53)	24 (53)	24 (53)
LOWER FRAME ASSEMBLY	830 (1830)	830 (1830)	960 (2120)	960 (2120)
LOWER FRAME	328 (723)	328 (723)	328 (723)	328 (723)
SLEWING BEARING	36 (79)	36 (79)	36 (79)	36 (79)
TRAVEL MOTOR	27 ×2 (60×2)	27 ×2 (60×2)	27 ×2 (60×2)	27 ×2 (60×2)
LOWER ROLLER	6 ×8 (13×8)	6 ×8 (13×8)	6 ×8 (13×8)	6 ×8 (13×8)
FRONT IDLER	17×2 (37×2)	17×2 (37×2)	17×2 (37×2)	17×2 (37×2)
IDLER ADJUSTER	11×2 (24×2)	11×2 (24×2)	11×2 (24×2)	11×2 (24×2)
SPROCKET	5×2 (11×2)	5×2 (11×2)	5×2 (11×2)	5×2 (11×2)
RUBBER CRAWLER SHOE	80 (176) ×2	80 (176) ×2	—	—
STEEL SHOE	—	—	147 (324) ×2	147 (324) ×2
SWIVEL JOINT	11 (24)	11 (24)	11 (24)	11 (24)
DOZER	117 (260)	117 (260)	117 (260)	117 (260)
DOZER CYLINDER	20 (44)	20 (44)	20 (44)	20 (44)
ATTACHMENT ASSEMBLY	300 (662)	300 (662)	300 (662)	300 (662)
BOOM ASSEMBLY	125 (276)	125 (276)	125 (276)	125 (276)
BOOM	88 (194)	88 (194)	88 (194)	88 (194)
ARM CYLINDER	28 (62)	28 (62)	28 (62)	28 (62)
ARM ASSEMBLY	95 (209)	95 (209)	95 (209)	95 (209)
ARM	51 (112)	51 (112)	51 (112)	51 (112)
BUCKET CYLINDER	17 (37)	17 (37)	17 (37)	17 (37)
BUCKET LINK	6 (13)	6 (13)	6 (13)	6 (13)
IDLER LINK	2×2 (4×2)	2×2 (4×2)	2×2 (4×2)	2×2 (4×2)
BUCKET ASSEMBLY (STD)	64 (141)	64 (141)	64 (141)	64 (141)
FLUIDS	50 (110)	50 (110)	50 (110)	50 (110)
HYDRAULIC OIL	24 (53)	24 (53)	24 (53)	24 (53)
FUEL	32 (70)	32 (70)	32 (70)	32 (70)
COOLANT	4 (9)	4 (9)	4 (9)	4 (9)

Bucket weight is shown with standard bucket weight.

Sample of manual. Download All 540 pages at:
https://www.arepairmanual.com/downloads/new-holland-e27-compact-excavators-service-repair-manual/