Product: New Holland MZ14H/MZ16H/MZ18H Tractor Service Repair Manual
Full Download: https://www.arepairmanual.com/downloads/new-holland-mz14h-mz16h-mz18h-tractor-service-repair-manual/

NEW HOLLAND

REPAIR MANUAL

MZ14H
MZ16H
MZ18H

NEW HOLLAND

SERVICE

Sample of manual. Download All 122 pages at:
https://www.arepairmanual.com/downloads/new-holland-mz14h-mz16h-mz18h-tractor-service-repair-manual/

87045363 2/04

Product: New Holland MZ14H/MZ16H/MZ18H Tractor Service Repair Manual
Full Download: https://www.arepairmanual.com/downloads/new-holland-mz14h-mz16h-mz18h-tractor-service-repair-manual/

SECTION 1 - GENERAL INFORMATION

SECTION 2 - MODEL/SERIAL NUMBER LOCATION

SECTION 3 - GREASING AND LUBRICATION

SECTION 4 - TRANSAXLE

SECTION 5 - CHASSIS

SECTION 6 - MOWER DECKS

SECTION 7 - ELECTRICAL SYSTEM

The sections used through out all New Holland product Repair manuals may not be used for each product. Each Repair manual will be made up of one or several books. Each book will be labeled as to which sections are in the overall Repair manual and which sections are in the each book.

The sections listed above are the sections utilized for the MZ14H, MZ16H, and MZ18H series tractors.

Sample of manual. Download All 122 pages at:
https://www.arepairmanual.com/downloads/new-holland-mz14h-mz16h-mz18h-tractor-service-repair-manual/

SECTION 1 - GENERAL INFORMATION

CONTENTS

Section	Description	Page
	General Information	1-2
	Think Safety First	1-2
	General Specifications	1-3
	Hydrostatic Transaxles	1-8
	Torque Specifications	1-10
	Standard Torque For Dry, Zinc Plated, and Steel Fasteners (Inch Series)	1-11
	Standard Torque For Dry, Zinc Plated, and Steel Fasteners (Metric Fasteners)	1-12
	Other Torque Specifications	1-13
	Equivalents and Conversions	1-14

This symbol means WARNING or PERSONAL SAFETY INSTRUCTION - read the instruction because it has to do with your safety. Failure to comply with the instruction may result in personal injury or even death.

This manual is intended as a service and repair manual only. The safety instructions provided herein are for troubleshooting, service, and repair of the MZ14H, MZ16H, MZ18H zero radius tractor. The MZ14H, MZ16H, MZ18H zero radius tractor and attachment operator's manuals contain safety information and operating tips for safe operating practices. Operator's manuals are available through your New Holland dealer.

THINK SAFETY FIRST

AVOID UNEXPECTED STARTING OF ENGINE...

Always turn off the engine and disconnect the spark plug wire(s) before cleaning, adjusting, or repair.

AVOID LACERATIONS AND AMPUTATIONS...

Stay clear of all moving parts whenever the engine is running. Treat all normally moving parts as if they were moving whenever the engine is running or has the potential to start.

AVOID BURNS...

Do not touch the engine, muffler, or other components which may increase in temperature during operation, while the unit is running or shortly after it has been running.

AVOID FIRES AND EXPLOSIONS...

Avoid spilling fuel and never smoke while working with any type of fuel or lubricant. Wipe up any spilled fuel or oil immediately. Never remove the fuel cap or add fuel when the engine is running. Always use approved, labeled containers for storing or transporting fuel and lubricants.

AVOID ASPHYXIATION...

Never operate an engine in a confined area without proper ventilation.

AVOID INJURY FROM BATTERIES...

Battery acid is poisonous and can cause burns. Avoid contact with skin, eyes, and clothing. Battery gases can explode. Keep cigarettes, sparks, and flames away from the battery.

AVOID INJURY DUE TO INFERIOR PARTS...

Use only original equipment parts to ensure that important safety criteria are met.

AVOID INJURY TO BYSTANDERS...

Always clear the area of bystanders before starting or testing powered equipment.

AVOID INJURY DUE TO PROJECTILES...

Always clear the area of sticks, rocks, or any other debris that could be picked up and thrown by the powered equipment.

AVOID MODIFICATIONS...

Never alter or modify any part unless it is a factory approved procedure.

AVOID UNSAFE OPERATION...

Always test the safety interlock system after making adjustments or repairs on the machine. Refer to the Electrical section in this manual for more information.

GENERAL SPECIFICATIONS

	MZ14H	MZ16H	MZ18H
ENGINE			
Type	Briggs & Stratton	Briggs & Stratton	Briggs & Stratton
Model	280H070	286H770	31H777
Horsepower	10.8 kw (14.5)@3600 RPM	11.9 kw (16.0)@3600 RPM	13.4 kw (18.0)@3600 RPM
Cylinders	Single	Single	Single
Displacement	465CC	465CC	500CC
Low Idle Speed	N/A	N/A	N/A
Maximum Speed: High Idle	3300 ±100 RPM	3300 ±100 RPM	3300 ±100 RPM
Oil Capacity	1.75 qt. (1.7 L)	1.75 qt. (1.7 L)	1.75 qt. (1.7 L)
Serial Number	0166E1	0165E1	0168E1
Fuel Unleaded Gasoline	87 octane min.	87 octane min.	87 octane min.
Vertical Shaft	1 in. (2.54 cm) Dia	1 in. (2.54 cm) Dia	1 in. (2.54 cm) Dia
Charge Coil	12v - 9 amp	12v - 9 amp	12v - 16 amp
Other	Air cooled, Dual element air cleaner, Overhead valve, Four cycle, Solid state ignition	Air cooled, Dual element air cleaner, Overhead valve, Four cycle, Solid state ignition, Pressure lubricated with oil filter	Air cooled, Dual element air cleaner, Overhead valve, Four cycle, Solid state ignition, Full pressure lubricated with oil filter
CONSTRUCTION			
Frame	Drawn 10 ga. steel	Drawn 10 ga. steel	Drawn 10 ga. steel
FUEL SYSTEM			
Capacity	2 Gallon (7.6 L)	2 gallons (7.6 L)	2 Gallon (7.6 L)
Type	Single	Single	Single
Other	Fuel tank shut-off, Fuel filter (replaceable in-line type), Large diameter vented fuel cap	Fuel tank shut-off, Fuel filter (replaceable in-line type), Large diameter vented fuel cap	Fuel tank shut-off, Fuel filter (replaceable in-line type), Large diameter vented fuel cap
TRACTION SYSTEM			
Transaxles	Twin Hydro-Gear EZT Hydrostatic Transaxles	Twin Hydro-Gear EZT Hydrostatic Transaxles	Twin Hydro-Gear EZT Hydrostatic Transaxles
Transaxle Drive	Belt Drive with self-tensioning system	Belt Drive with self-tensioning system	Belt Drive with self-tensioning system
Ground Speed	Infinite, 0 to 6.0-MPH (9.7-km/hr) forward, 0 to 3-MPH (5.0-km/hr) reverse	Infinite, 0 to 6.0-MPH (9.7-km/hr) forward, 0 to 3-MPH (5.0-km/hr) reverse	Infinite, 0 to 6.0-MPH (9.7-km/hr) forward, 0 to 3-MPH (5.0-km/hr) reverse

	MZ14H	MZ16H	MZ18H
Transport Levers	Allow unit to be moved without engine running	Allow unit to be moved without engine running	Allow unit to be moved without engine running
ATTACHMENT DRIVE			
Clutch	Electric Clutch	Electric Clutch	Electric Clutch
Type	Vertical drive with single deep B-groove pulley	Vertical drive with single deep B-groove pulley	Vertical drive with single deep B-groove pulley
TIRES			
Rear Drive Tires	18 x 6.5-8 4 ply	18 x 7.5-8 4 ply	18 x 8.5-8 4 ply
Front Castor Tires	410/350 x 4 with “saw-tooth” tread	410/350 x 4 with “saw-tooth” tread	410/350 x 4 with “saw-tooth” tread
Tire Pressure	13 psi (90 kPa) rear, 35 psi (241 kPa) front	13 psi (90 kPa) rear, 35 psi (241 kPa) front	13 psi (90 kPa) rear, 35 psi (241 kPa) front
OPERATORS SEAT			
Type	High back foam padded	High back foam padded	High back foam padded with arm rests
Mounting	Hinged mounting for easy access to battery and controls; spring suspension	Hinged mounting for easy access to battery and controls; spring suspension	Hinged mounting for easy access to battery and controls; spring suspension
Adjustment	Fore and aft 2 in. (51 mm) by loosening 2 knobs and sliding seat	Fore and aft 2 in. (51 mm) by loosening 2 knobs and sliding seat	Fore and aft 2 in.(51 mm) by loosening 2 knobs and sliding seat
STEERING			
Levers	Dual wrap-around levers control hydraulic pumps	Dual wrap-around levers control hydraulic pumps	Dual wrap-around levers control hydraulic pumps
Dampening	Dual hydraulic dampers	Dual hydraulic dampers	Dual hydraulic dampers
Turning Radius	Zero radius turn (ZRT)	Zero radius turn (ZRT)	Zero radius turn (ZRT)
CONTROLS			
Steering Lever	Dual wrap-around with cushioned grips	Dual wrap-around with cushioned grips	Dual wrap-around with cushioned grips
Parking Brake	Automatic with steering lever lock out	Automatic with steering lever lock out	Automatic with steering lever lock out
Attachment Lift	Right hand operated lever with cushioned grip	Right hand operated lever with cushioned grip	Right hand operated lever with cushioned grip
Cutting Height	Rightside incorporated with attachment lift	Rightside incorporated with attachment lift	Rightside incorporated with attachment lift

	MZ14H	MZ16H	MZ18H
Engine Throttle	Rightside console mounted lever	Rightside console mounted lever	Rightside console mounted lever
Ignition Switch	Rightside console mounted electric with key	Rightside console mounted electric with key	Rightside console mounted electric with key
Power Take Off	Rightside console mounted electric	Rightside console mounted electric	Rightside console mounted electric
INTERLOCKS			
Seat	Operator presence switch	Operator presence switch	Operator presence switch
Cotnrol Lever/Brake	Dual position switch	Dual position switch	Dual position switch
Power Take Off	Position switch	Position switch	Position switch
ELECTRICAL SYSTEM			
Battery Voltage	12 volt negative ground	12 volt negative ground	12 volt negative ground
Battery Type	BCI Group U1	BCI Group U1	BCI Group U1
Fused	(1) 30 amp blade type, main (1) 25 amp blade type, charge system	(1) 30 amp blade type, main (1) 25 amp blade type, charge system	(1) 30 amp blade type, main (1) 25 amp blade type, charge system (1) 10 amp included with optional light kit
LUBRICATON FITTINGS			
Front Castor Pivots	2 Fittings	2 Fittings	2 Fittings
Front Castor Wheels	2 Fittings	2 Fittings	2 Fittings
DIMENSIONS			
Wheel Base	47.6 in. (120.9 cm) center of front tire to center of drive tires	47.6 in. (120.9 cm) center of front tire to center of drive tires	47.6 in. (120.9 cm) center of front tire to center of drive tires
Width	39.6 in. (100.6 cm) outside rear tires	40.5 in. (102.9 cm) outside rear tires	43.2 in. (109.7 cm) outside rear tires
Overall Width	45.4 in. (115.3 cm) with deck deflector down, 42.4 in. (107.7 cm) gate width with deflector up	50.7 in. (128.8 cm) with deck deflector down, 46.0 in. (116.8 cm) gate width with deflector up	55.0 in. (139.7 cm) with deck deflector down, 46.6 in. (118.4 cm) gate width with deflector up
Overall Length	72.6 in. (184.4 cm)	72.6 in. (184.4 cm)	72.6 in. (184.4 cm)
Overall Height	39 in. (99.1 cm)	39 in. (99.1 cm)	39 in. (99.1 cm)

	MZ14H	MZ16H	MZ18H
Track Width	32.9 in. (83.6 cm) center to center of rear tires 31.6 in. (80.3 cm) center to center of castor tires	32.9 in. (83.6 cm) center to center of rear tires 31.6 in. (80.3 cm) center to center of castor tires	34.6 in. (87.9 cm) center to center of rear tires 31.6 in. (80.3 cm) center to center of castor tires
Deck Width	45.4 in. (115.3 cm) w/ deflector down	50.7 in. (128.8 cm) w/ deflector down	55 in. (139.7 cm) w/ deflector down
WEIGHT			
Net Weight.....	505 lbs. (229 kg.) (estimated)	516 lbs. (234 kg.) (estimated)	535 lbs. (243 kg.) (estimated)
DECK	Right side discharge, 38 in cut, two blade mid-mounted rotary. Drawn 13 gauge steel deck with welded mounting brackets. Frame supported.	Right side discharge, 42 in cut, two blade mid-mounted rotary. Drawn 13 gauge steel deck with welded mounting brackets. Frame supported.	Right side discharge, 44 in cut, two blade mid-mounted rotary. Drawn 13 gauge steel deck with welded mounting brackets. Frame supported.
DEFLECTOR	Pivoting deflector (spring loaded) (H.D.P.E.).	Pivoting deflector (spring loaded) (H.D.P.E.).	12 gauge formed, held down by torsion springs at pivot bracket.
ANTI-SCALP ROLLERS	Optional kit	Optional kit	Two Front - left and right
HEIGHT OF CUT	Adjusts from 1.5” to 4.5” (38 mm to 114 mm) (7 positions)	Adjusts from 1.5” to 4.5” (38 mm to 114 mm) (7 positions)	Adjusts from 1.5” to 4.5” (38 mm to 114 mm) (7 positions)
UNCUT CIRCLE	0” uncut circle	0” uncut circle	0” uncut circle
ENGINE TO DECK DRIVE	HA-section Kevlar cord “V” belt from engine clutch sheave to deck spindle sheaves. Spring loaded idler for belt tension and take-up	HA-section Kevlar cord “V” belt from engine clutch sheave to deck spindle sheaves. Spring loaded idler for belt tension and take-up	HA-section Kevlar cord “V” belt from engine clutch sheave to deck spindle sheaves. Spring loaded idler for belt tension and take-up
SPINDLE ASSEMBLIES	Two 17-mm diameter spindles turning in permanently lubed ball bearings. Die cast aluminum spindle housings.	Two 17-mm diameter spindles turning in permanently lubed ball bearings. Die cast aluminum spindle housings.	Two 17-mm diameter spindles turning in permanently lubed ball bearings. Die cast aluminum spindle housings.

	MZ14H	MZ16H	MZ18H
BLADES	Two 19.32” x 2.5” x .187” heat treated steel blades.	Two 21.60” x 2.25” x .164” heat treated steel blades.	Three 15.5” x 2.5” x .187” heat treated steel blades.
TIP SPEED	16,760 ft/min @ 3300 RPM nominal 17,270 ft/min @ 3400 RPM max	17,290 ft/min @ 3300 RPM nominal 17,810 ft/min @ 3400 RPM max	16,740 ft/min @ 3300 RPM nominal 17,310 ft/min @ 3400 RPM max
DECK MOUNTING	Deck suspended from front frame by four trunnion rods and attached to lift mechanism by two multi-position link (“pork chops”)	Deck suspended from front frame by four trunnion rods and attached to lift mechanism by two multi-position link (“pork chops”)	Deck suspended from front frame by four trunnion rods and attached to lift mechanism by two multi-position link (“pork chops”)
OPTIONAL EQUIPMENT			
Recycler Kit			
Twin Bagger			
Vac Bagger			
Arm Rest Kit			
Snow Plow Attachment			
Tire Chains			
Smooth Castor Wheel Kit			
Decal Kit - Canada			
Anit-Scalp Kit			
Light Kit			
CERTIFICATION	Conforms to California CARB and EPA Certification. Conforms to ANSI B71.1-2001.	Conforms to California CARB and EPA Certification. Conforms to ANSI B71.1-2001.	Conforms to California CARB and EPA Certification. Conforms to ANSI B71.1-2001.

HYDROSTATIC TRANSAXLES

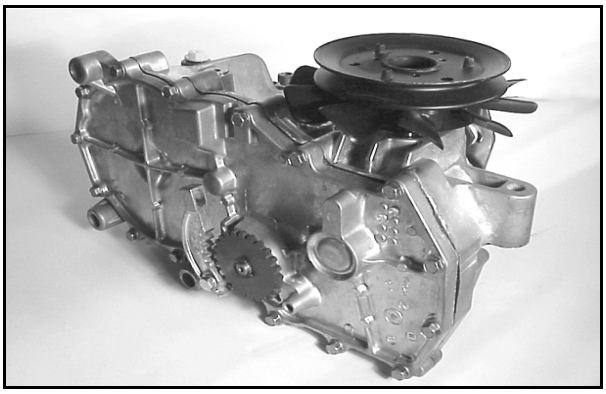

.

GENERAL SPECIFICATIONS		
Lubrication	SAE 20W-50 API Classification SH/CD	
Oil Capacity	1.6 to 1.7 qt. (1.5 to 1.6 liters)	
Oil Level	The transaxle is a sealed system and does not requre periodic checking. Check oil at the oil fill plug location only. Do not check the oil at the vent tube. Checking oil at the vent tube will only give you a false reading or no reading at all, since this is the oil expansion area. If the oil needs to be checked, the transaxle must be removed to check oil level and IT CAN BE ONLY CHECKED COLD. There is a fill plug located at the top of the transaxle. To check the level of the oil, remove the fill plug. Oil level should be 3/4” (1.9 cm) from the top of the oil fill plug.	
Fluid Change	The transaxle is factory filled and does not require regular oil changes.	
Ground Speed	Forward	0.6.0 MPH (9.7 km/h)
	Reverse	0-3.0 MPH (0-5.0 km/h)

NOTE: *If you are replacing the transaxle, after you have installed the hydro rods, remove the nut and washer located on the cam plate. Also, check the oil prior to installation.*

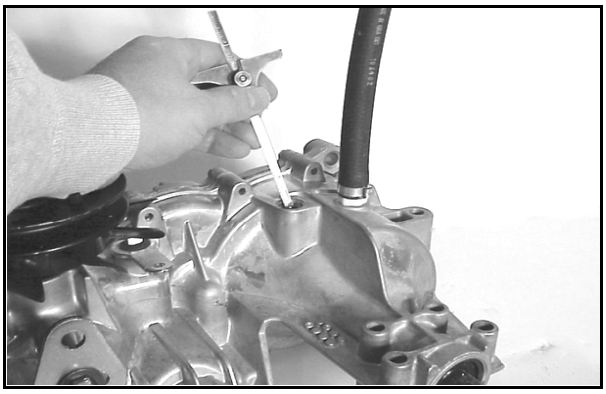

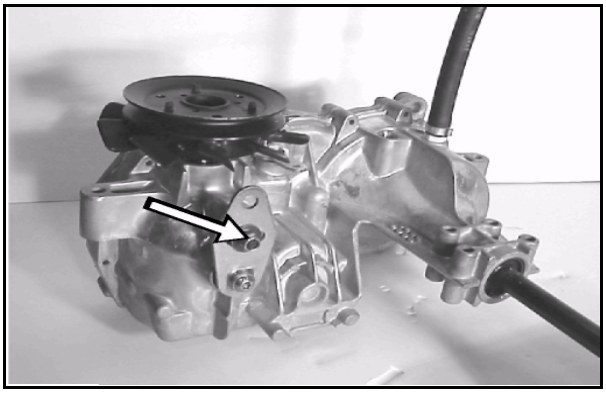

TORQUE SPECIFICATIONS

Recommended fastener torque values are listed in the following tables. For critical applications, as determined by New Holland, either the recommended torque or a torque that is unique to the application is clearly identified and specified in the service manual.

These torque specifications for the installation and tightening of fasteners shall apply to all fasteners which do not have a specific requirement identified in the service manual. The following factors shall be considered when applying torque: cleanliness of the fasteners, use of a thread sealant (Loctite), degree of lubrication on the fastener, presence of a prevailing torque feature, hardness of the surface underneath of the fastener's head, or similar condition which affects the installation.

As noted in the following tables, torque values should be reduced by 25% for lubricated fasteners to achieve the similar stress as a dry fasteners. Torque values may also have to be reduced when the fastener is threaded into aluminum or brass. The specific torque value should be determined based on the aluminum or brass material strength, fastener size, length of thread engaement, etc.

INCH SERIES BOLTS AND SCREWS	
(A) Grade 1	(C) Grade 8
(B) Grade 5	

METRIC BOLTS AND SCREWS	
(A) Class 8.8	(B) Class 10.9

The standard method of verifying torque shall be performed by marking a line on the fastener (head or nut) and mating part, then back off fastener 1/4 of a turn. Measure the torque required to tighten the fastener until the lines match up.

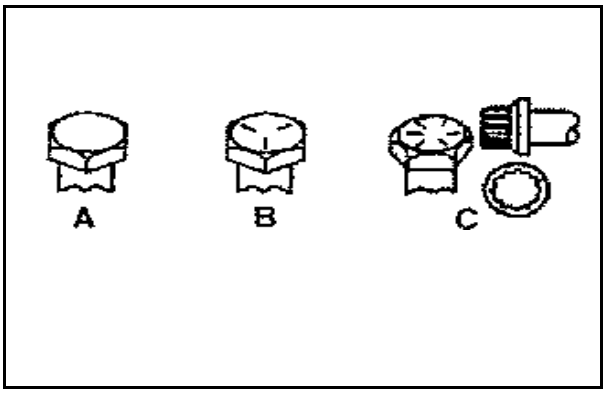

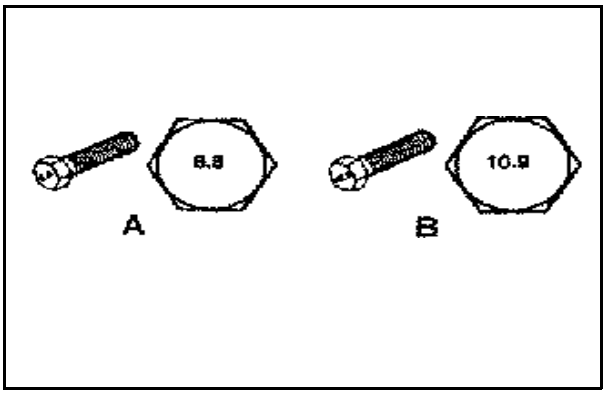

STANDARD TORQUE FOR DRY, ZINC PLATED, AND STEEL FASTENERS (INCH SERIES)

THREAD SIZE	GRADE 1, 5, & 8 WITH THIN HEIGHT NUTS	SAE GRADE 1 BOLTS, SCREWS, STUDS, & SEMS WITH REGULAR HEIGHT NUTS (SAE J995 GRADE 2 OR STRONGER NUTS)		SAE GRADE 5 BOLTS, SCREWS, STUDS, & SEMS WITH REGULAR HEIGHT NUTS (SAE J995 GRADE 2 OR STRONGER NUTS		SAE GRADE 8 BOLTS, SCREWS, STUDS, & SEMS WITH REGULAR HEIGHT NUTS (SAE J995 GRADE 2 OR STRONGER NUTS	
	In-lb	In-lb	N-cm	In-lb	N-cm	In-lb	N-cm
# 6 - 32 UNC	10 ± 2	13 ± 2	147 ± 23	15 ± 2	170 ± 20	23 ± 2	260 ± 20
# 6 - 40 UNF				17 ± 2	190 ± 20	25 ± 2	280 ± 20
# 8 - 32 UNC	13 ± 2	25 ± 2	282 ± 30	29 ± 3	330 ± 30	41 ± 4	460 ± 45
# 8 -36 UNF				31 ± 3	350 ± 30	43 ± 4	31 ± 3
# 10 - 24 UNC	18 ± 2	30 ± 5	339 ± 56	42 ± 4	475 ± 45	60 ± 6	674 ± 70
# 10 - 32 UNF				48 ± 4	540 ± 45	68 ± 6	765 ± 70
1/4 - 20 UNC	48 ± 7	53 ± 7	599 ± 79	100 ± 10	1125 ± 100	140 ± 15	1580 ± 170
1/4 - 28 UNF	53 ± 7	65 ± 10	734 ± 113	115 ± 10	1300 ± 100	160 ± 15	1800 ± 170
5/16 - 18 UNC	115 ± 15	105 ± 17	1186 ± 169	200 ± 25	2250 ± 280	300 ± 30	3390 ± 340
5/16 - 24 UNF	138 ± 17	128 ± 17	1446 ± 192	225 ± 25	2540 ± 280	325 ± 30	3670 ± 340
	ft-lb	ft-lb	N-m	ft-lb	N-m	ft-lb	N-m
3/8 - 16 UNC	16 ± 2	16 ± 2	22 ± 3	30 ± 3	41 ± 4	43 ± 4	58 ± 5
3/8 - 24 UNF	17 ± 2	18 ± 2	24 ± 3	35 ± 3	47 ± 4	50 ± 4	68 ± 5
7/16 - 14 UNC	27 ± 3	27 ± 3	37 ± 4	50 ± 5	68 ± 7	70 ± 7	68 ± 9
7/16 - 20 UNF	29 ± 3	29 ± 3	39 ± 4	55 ± 5	75 ± 7	77 ± 7	104 ± 9
1/2 - 13 UNC	30 ± 3	48 ± 7	65 ± 9	75 ± 8	102 ± 11	105 ± 10	142 ± 14
1/2 - 20 UNF	32 ± 3	53 ± 7	72 ± 9	85 ± 8	115 ± 11	120 ± 10	163 ± 14
5/8 - 11 UNC	65 ± 10	88 ± 12	119 ± 16	150 ± 15	203 ± 20	210 ± 20	285 ± 27
5/8 - 18 UNF	75 ± 10	95 ± 15	129 ± 20	170 ± 15	230 ± 20	240 ± 20	325 ± 27
3/4 - 10 UNC	93 ± 12	140 ± 20	190 ± 27	265 ± 25	359 ± 34	374 ± 35	508 ± 47
3/4 - 16 UNF	115 ± 15	165 ± 25	224 ± 34	300 ± 25	407 ± 34	420 ± 35	569 ± 47
7/8 - 9 UNC	140 ± 20	225 ± 25	305 ± 34	430 ± 45	583 ± 61	600 ± 60	813 ± 81
7/8 - 14 UNF	155 ± 25	260 ± 30	353 ± 41	475 ± 45	644 ± 61	660 ± 60	895 ± 81

NOTE: *Reduce torque values listed in the table above by 25% for lubricated fasteners. Lubricated fasteners are defined as threads coated with a lubricant such as oil, graphite, or thread sealant such as Loctite.*

NOTE: *Torque values may have to be reduced when installing fasteners into threaded aluminum or brass. The specific torque value should be determined based on the fastener size, the aluminum or base material strength, length of thread engagement, etc.*

NOTE: *The nominal torque values listed above for Grade 5 and 8 fasteners are based on 75% of the minimum proof load specified in SAE J429. The tolerance is approximately ± 10% of the nominal torque value. Thin height nuts include jam nuts.*

STANDARD TORQUE FOR DRY, ZINC PLATED, AND STEEL FASTENERS (METRIC FASTENERS)

THREAD SIZE	CLASS 8.8 BOLTS, SCREWS, AND STUDS WITH REGULAR HEIGHT NUTS (CLASS 8 OR STRONG NUTS)		CLASS 10.9 BOLTS, SCREWS, AND STUDS WITH REGULAR HEIGHT NUTS (CLASS 10 OR STRONG NUTS)	
M5 x 0.8	57 ± 5 in-lb	640 ± 60 N-cm	78 ± 7 in-lb	885 ± 80 N-cm
M6 x 1.0	96 ± 9 in-lb	1018 ± 100 N-cm	133 ± 13 in-lb	1500 ± 150 N-cm
M8 x 1.25	19 ± 2 ft-lb	26 ± 3 N-m	27 ± 2 ft-lb	36 ± 3 N-m
M10 x 1.5	38 ± 4 ft-lb	52 ± 5 N-m	53 ± 5 ft-lb	72 ± 7 N-m
M12 x 1.75	66 ± 7 ft-lb	90 ± 10 N-m	92 ± 9 ft-lb	125 ± 12 N-m
M16 x 2.0	166 ± 15 ft-lb	225 ± 20 N-m	229 ± 22 ft-lb	310 ± 30 N-m
M20 x 2.5	325 ± 33 ft-lb	440 ± 45 N-m	450 ± 37 ft-lb	610 ± 50 N-m

NOTE: *Reduce torque values listed in the table above by 25% for lubricated fasteners. Lubricated fasteners are defined as threads coated with a lubricant such as oil, graphite, or thread sealant such as Loctite.*

NOTE: *Torque values may have to be reduced when installing fasteners into threaded aluminum or brass. The specific torque value should be determined based on the fastener size, the aluminum or base material strength, length of thread engagement, etc.*

NOTE: *The nominal torque values listed above are based on 75% of the minimum proof load specified in SAE J1199. The tolerance is approximately ± 10% of the nominal torque value. Thin height nuts include jam nuts.*

OTHER TORQUE SPECIFICATIONS

SAE GRADE 8 STEEL SET SCREWS

THREAD SIZE	RECOMMENDED TORQUE	
	SQUARE HEAD	HEX SOCKET
1/4 - 20 UNC	140 ± 20 in-lb	73 ± 12 in-lb
5/16 - 18 UNC	215 ± 35 in-lb	145 ± 20 in-lb
3/8 - 16 UNC	35 ± 10 ft-lb	18 ± 3 ft-lb
1/2 - 13 UNC	75 ± 15 ft-lb	50 ± 10 ft-lb

WHEEL BOLTS AND LUG NUTS

THREAD SIZE	RECOMMENDED TORQUE**	
7/16 - 20 UNF Grade 5	65 ± 10 ft-lb	88 ± 14 N-m
1/2 - 20 UNF Grade 5	80 ± 10 ft-lb	108 ± 14 N-m
M12 x 1.25 Class 8.8	80 ± 10 ft-lb	108 ± 14 N-m
M12 x 1.5 Class 8.8	80 ± 10 ft-lb	108 ± 14 N-m

** For steel wheels and non-lubricated fasteners.

THREAD CUTTING SCREWS (ZINC PLATED STEEL)

TYPE 1, TYPE 23, OR TYPE F	
THREAD SIZE	BASELINE TORQUE*
No. 6 - 32 UNC	20 ± 5 in-lb
No. 8 - 32 UNC	30 ± 5 in-lb
No. 10 - 24 UNC	38 ± 7 in-lb
1/4 - 20 UNC	85 ± 15 in-lb
5/16 - 18 UNC	110 ± 20 in-lb
3/8 - 16 UNC	200 ± 100 in-lb

THREAD CUTTING SCREWS (ZINC PLATED STEEL)

THREAD SIZE	THREADS PER INCH		BASELINE TORQUE*
	TYPE A	TYPE B	
No. 6	18	20	20 ± 5 in-lb
No. 8	15	18	30 ± 5 in-lb
No. 10	12	16	38 ± 7 in-lb
No.12	11	14	85 ± 15 in-lb

* Hole size, material strength, material thickness and finish must be considered when determining specific torque values. All torque values are based on non-lubricated fasteners.

Conversion Factors

in-lb x 11.2985 - N-cm
ft-lb x 1.3558 = N-m

N-cm x 0.08851 = in-lb
N-cm x 0.73776 - ft-lb

EQUIVALENTS AND CONVERSIONS

DECIMAL AND MILLIMETER EQUIVALENTS

FRACTIONS	DECIMALS	MM	FRACTIONS	DECIMALS	MM
1/64	0.015625	0.397	33/64	0.515625	13.097
1/32	0.03125	0.794	16/32	0.53125	13.484
3/64	0.046875	1.191	35/64	0.546875	13.891
1/16	0.0625	1.588	9/16	0.5625	14.288
5/64	0.078125	1.984	37/64	0.578125	14.684
3/32	0.9375	2.381	19/32	0.59375	15.081
1/8	0.1250	3.175	5/8	0.6250	15.875
9/64	0.140625	3.572	41/64	0.640625	16.272
5/32	0.15625	3.969	21/32	0.65625	16.669
11/64	0.171875	4.366	43/64	0.671875	17.066
3/16	0.1875	4.762	11/16	0.6875	17.462
13/64	0.203125	5.159	45/64	0.703125	17.859
7/32	0.21875	5.556	23/32	0.71875	18.256
15/64	0.234375	5.953	47/64	0.734375	18.653
1/4	0.2500	6.350	3/4	0.7500	19.050
17/64	0.265625	6.747	49/64	0.765625	19.447
9/32	0.28125	7.144	25/32	0.78125	19.844
19/64	0.296875	7.541	51/64	0.796875	20.241
5/16	0.3125	7.541	13/16	0.8125	20.638
21/64	0.328125	8.334	53/64	0.828125	21.034
11/32	0.34375	8.731	27/32	0.84375	21.431
23/64	0.359375	9.128	55/64	0.859375	21.828
3/8	0.3750	9.525	7/8	0.8750	22.225
25/64	0.390625	9.922	57/64	0.890625	22.622
13/32	0.40625	10.319	29/32	0.90625	23.019
27/64	0.421875	10.716	59/64	0.921875	23.416
7/16	0.4375	11.112	15/16	0.9375	23.812
29/64	0.453125	11.509	61/64	0.953125	24.209
15/32	0.46875	11.906	31/32	0.96875	24.606
31/64	0.484375	12.303	63/64	0.984375	25.003
1/2	0.5000	12.700	1	1.000	25.400
1 mm = 0.03937 in.			0.001 in. = 0.0254 mm		

U.S. METRIC CONVERSIONS

	TO CONVERT	INTO	MULTIPLY BY
Linear Measurement	Miles	Kilometers	1.609
	Yards	Meters	0.9144
	Feet	Meters	0.3048
	Feet	Centimeters	30.48
	Inches	Meters	0.0254
	Inches	Centimeters	2.54
	Inches	Millimeters	25.4
Area	Square Miles	Square Kilometers	2.59
	Square Feet	Square Meters	0.0929
	Square Inches	Square Centimeters	6.452
	Acre	Hectare	0.4047
Volume	Cubic Yards	Cubic Meters	0.7646
	Cubic Feet	Cubic Meters	0.02832
	Cubic Inches	Cubic Centimeters	28.3495
Weight	Tons (Short)	Metric Tons	0.9078
	Pounds	Kilograms	0.4536
	Ounces	Grams	28.3495
Pressure	Pounds/Sq.In.	Kilopascal	6.895
Work	Foot-pounds	Newton-Meters	1.356
	Foot-pounds	Kiogram-Meters	0.1383
	Inch-pounds	Kilogram-Centimeters	1.152144
Liquid Volume	Quarts	Liters	0.9463
	Gallons	Liters	3.785
Liquid Flows	Gallons/Minute	Liters/Minute	3.785
Temperature	Fahrenheit	Celsius	1. Subtract 32° 2. Multiply by 5/9

SECTION 2 - MODEL/SERIAL NUMBER LOCATION

CONTENTS

Section	Description	Page
	Model/Serial Number Location	2-2
	Engine Model and Serial Number Identification	2-2

MODEL AND SERIAL NUMBER LOCATION

The unit model and serial number plate is located on the frame under the seat as shown in the illustration.

ENGINE MODEL AND SERIAL NUMBER IDENTIFICATION

Consult the appropriate engine manufacturer's service literature for the location and translation of the engine model and serial number information.

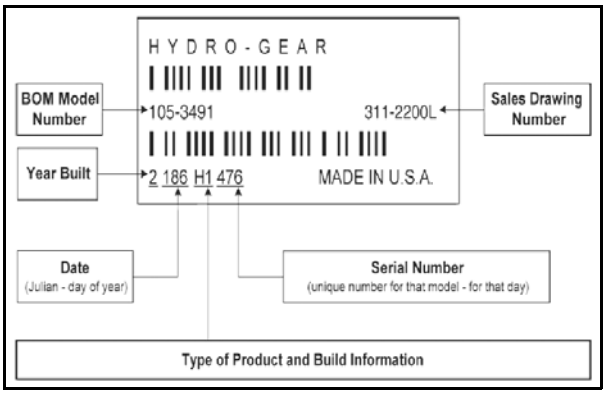

SECTION 3 - GREASING AND LUBRICATION

CONTENTS

Section	Description	Page
	Greasing and Lubrication	3-2

GREASING AND LUBRICATION

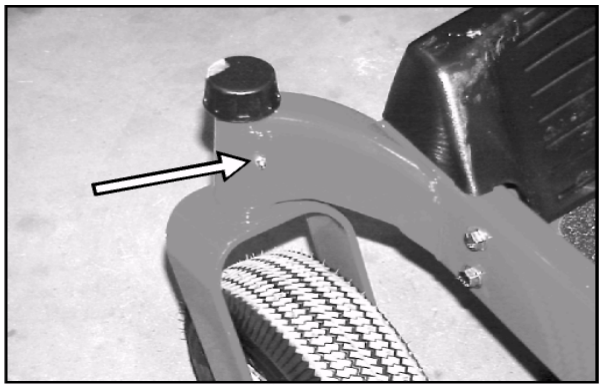

The unit should be greased every 25 hours or more often when operated in dusty, dirty or sandy conditions.

Grease type: New Holland Ambra GR-9 multi-purpose grease (general purpose lithium base grease).

There are four grease fittings located in the front wheel area:

1. One grease fitting is located in each of the cast iron pivot castor supports.

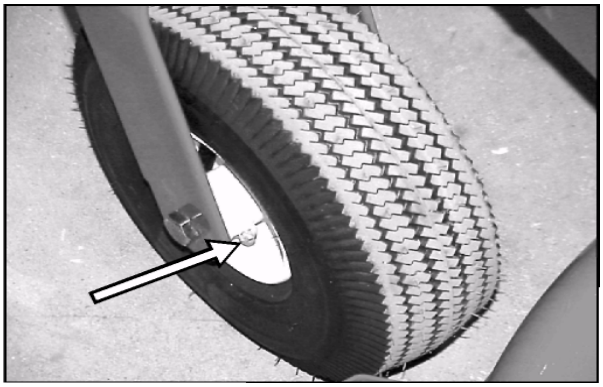

2. One grease fitting is located on each front wheel hub on the front tire.

SECTION 4 - TRANSAXLE

CONTENTS

Section	Description	Page
	Description and Operation	4-2
	General Description	4-2
	Hydraulic Schematic	4-3
	Technical Specifications	4-5
	Product Identification	4-5
	Troubleshooting Checklist	4-6
	Service and Maintenance Procedures	4-8
	Fluid Change Procedure	4-8
	Purging Procedures - Hydro-Gear Transaxles	4-9
	Neutral Adjustment	4-10
	Tracking Adjustments	4-13
	Brake Adjustment	4-14
	Actuator Arm Removal	4-16
	Actuator Arm Installation	4-19
	Internal Service	4-21
	Fluid Change	4-21
	Transaxle Removal	4-22
	Removing Transaxles From The Hydro Mount Frame	4-26
	Wheel Hub Removal	4-27
	Transaxle Installation	4-28
	Tools and Torques	4-32
	Control Arm And Bypass Arm	4-33
	Seal Kit Replacement	4-34
	Cog Brake And Side Housing	4-35
	Axle Shaft, Reduction Gears And Expansion Plate	4-36
	Motor Shaft	4-37
	Input Shaft And Bypass Rod	4-38
	Hydraulic Components	4-39
	Sealant Application	4-47

DESCRIPTION AND OPERATION

This section includes the transaxle general description, hydraulic schematics, technical specifications, servicing and troubleshooting procedures.

The transaxle normally will not require servicing during the life of the vehicle in which it is installed. Should other servicing be required, the exterior of the transaxle will need to be thoroughly cleaned before beginning most procedures. Do not wash the transaxle while it is hot. Do not use a pressure washer to clean the unit.

GENERAL DESCRIPTION

The transaxle is a self contained unit designed for the transfer and control of power. It provides an infinitely variable speed range between zero and maximum in both forward and reverse modes of operation.

This transaxle uses a variable displacement pump with a maximum displacement of 10cc per revolution, and motor with a fixed displacement of 10cc per revolution. The variable displacement pump features a trunnion mounted swashplate with a direct-proportional displacement control. Reversing the direction of the swashplate reverses the flow of oil from the pump and thus reverses the direction of the motor output rotation. The pump and motor are of the axial piston design and utilize spherical nosed pistons which are held against a thrust race by internal compression springs.

The transaxle has a self contained fluid supply and an internal filter. The fluid is forced through the filter by a positive “head” on the fluid in the housing/ expansion tank with an assist by the negative pressure created in the pump pistons as they operate.

The check valves in the center section are used to control the make-up flow of the fluid to the low pressure side of the loop.

A cam style, block lifting bypass is utilized in the transaxle to permit moving the vehicle for a short distance at a maximum of 2 m.p.h. (3.2 km/h) without starting the engine.

WARNING

Actuating the bypass will result in the loss of hydrostatic braking capacity. The machine must be stationary on a level surface and in neutral when actuating the bypass.

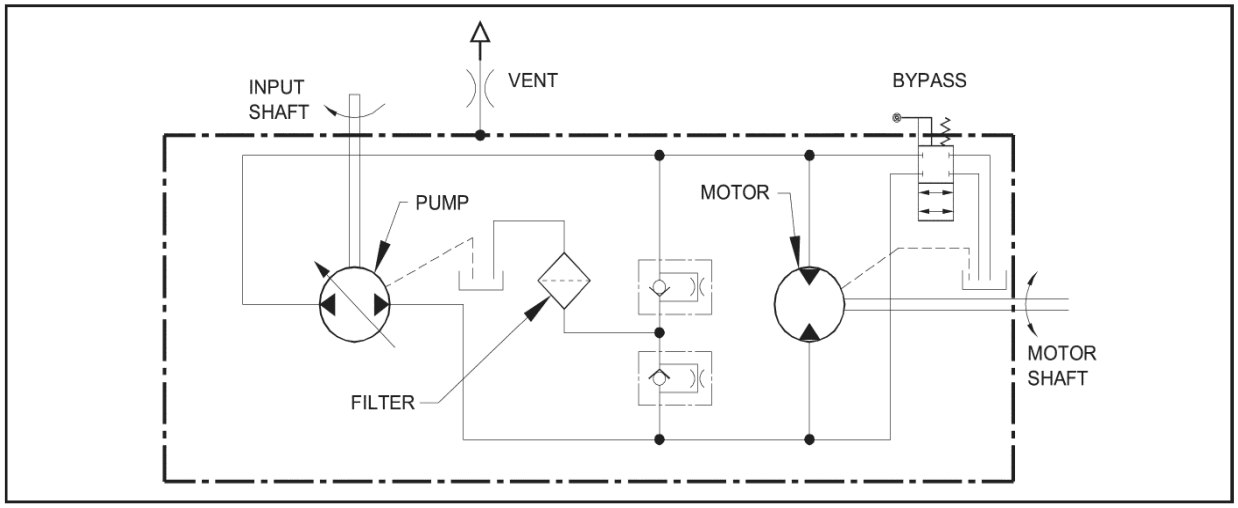

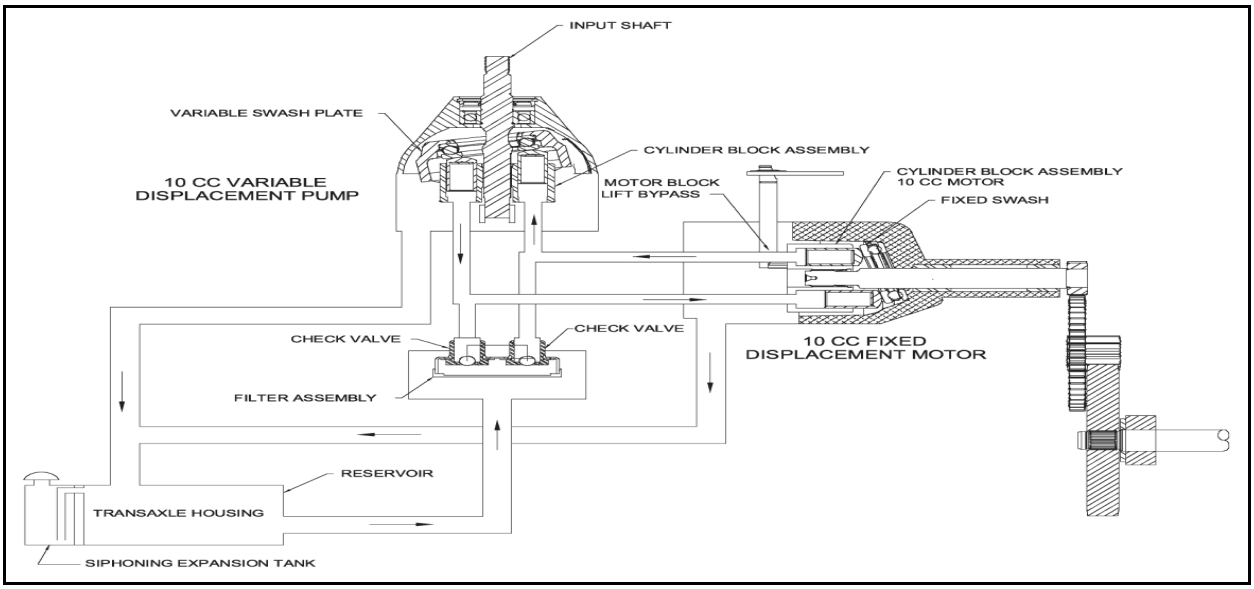

HYDRAULIC SCHEMATIC

The illustration above provides a flow diagram of the hydraulic oil circuit. The oil supply for the hydraulic system of the transaxle is also utilized for lubricating the components of the final drive assembly.

The input shaft and pump cylinder block are turned in one direction only by the engine/drive belt/pulley combination. Output of the oil flow is controlled by the direction and amount that the variable swashplate is angled. As the pump pistons compress they force the oil to flow through one of two passageways (forward or reverse) in the center section to the motor cylinder block and motor shaft. Since the motor has fixed displacement angle it is forced to turn with the flow of oil. As the angle of the pump swashplate is increased the amount of oil being pumped will increase and cause a higher speed output of the motor. Reversing the angle of the swashplate will reverse the direction of oil flow.

During the operation of the transaxle, fluid is “lost” from the hydraulic loop through leak paths designed into the product for lubrication purposes (around pistons, under the rotating cylinder blocks, etc.). This “lost” fluid returns to the transaxle housing, then is pulled back into one of the check valves depending upon the direction of vehicle operation. All of this oil must pass through an internal filter.

The motor cylinder block mounts onto a splined motor shaft which drives the gear train.

The bypass feature in the transaxle has a mechanical lever which lifts the motor block off of the center section running surface. This allows oil flow from the cylinder blocks to be discharged.

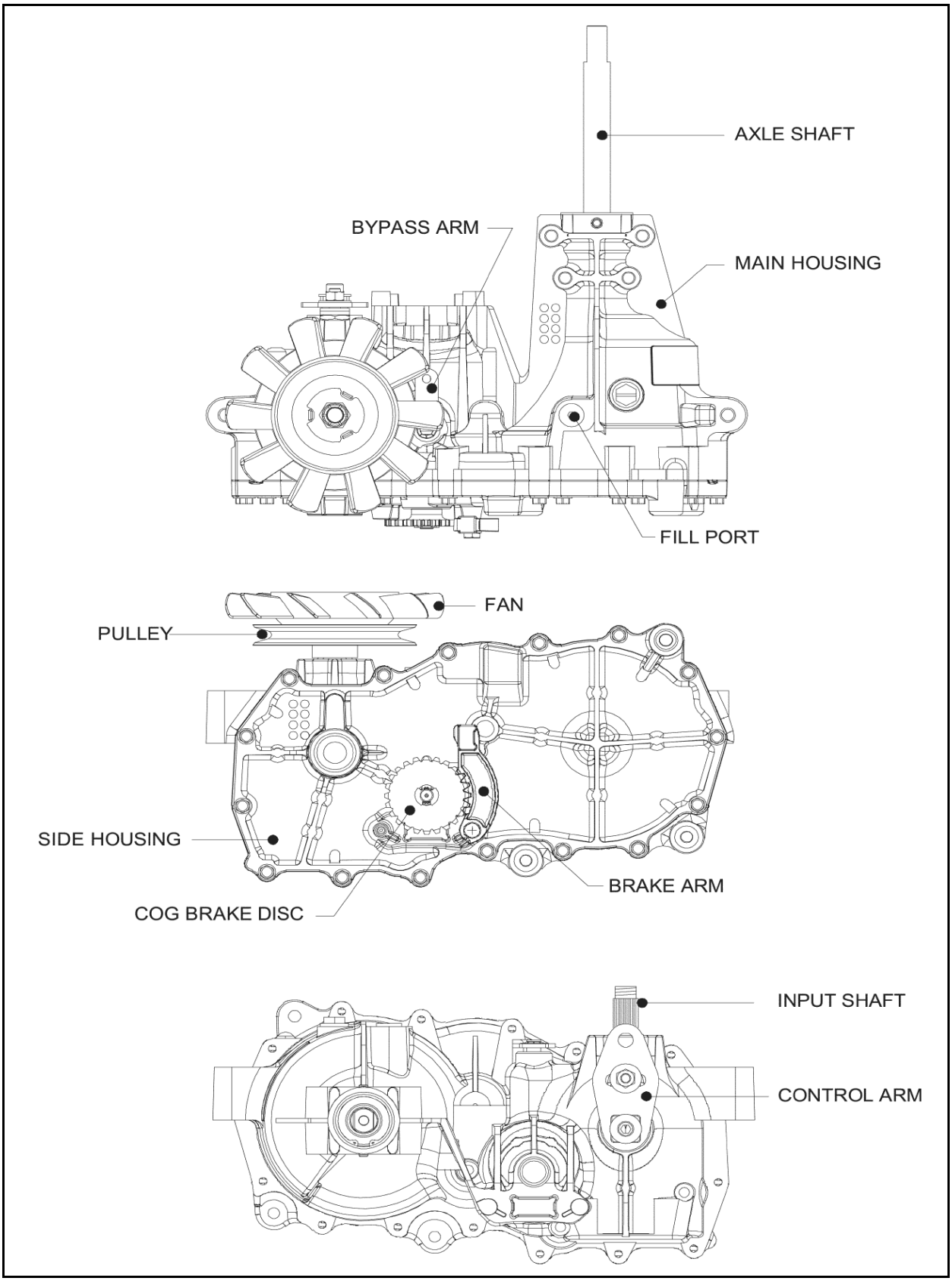
AXLE SHAFT
BYPASS ARM
MAIN HOUSING
FILL PORT
FAN
PULLEY
SIDE HOUSING
BRAKE ARM
COG BRAKE DISC
INPUT SHAFT
CONTROL ARM

TECHNICAL SPECIFICATIONS

Input Speeds	
Maximum	3000 RPM
Minimum	1800 RPM
Tire Diameter	20 in; 508 mm
Weight of Unit	29.0 lb; (13.15 kg)
Maximum Weight on Drive Tires	300 lbs. (136 kg) with 20” tires 340 lbs. (154 kg) with 18” tires

COMPONENT OPTIONS

Component	Component Options		
Axles Shaft Diameter and End Options	3/4” DD	1” Flange	1” DD various lengths
Brake Location	Inboard	Outboard	
Brake Type	Cog		
Control Arm Location	Inboard	Outboard	
Control Arrangements	Standard Control Arm	RTN (scissor style)	
Overall Transaxle Reduction	19.2:1	21.2:1	

PRODUCT IDENTIFICATION

The model and configuration of the transaxle can be determined from the label shown below.

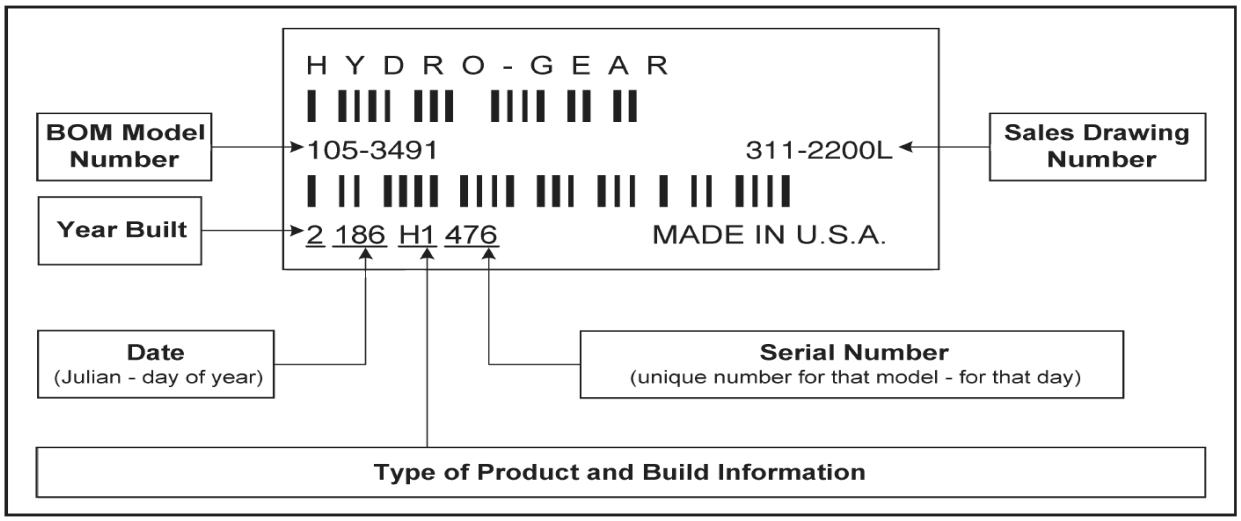

WARNING

Do not attempt any servicing or adjustments with the engine running.

Use extreme caution while inspecting the drive belt assembly and all vehicle linkage!

Follow all safety procedures outlined in the vehicle owner's manual.

In many cases, problems with the drive system are not related to a defective transaxle, but are caused by slipping drive belts, partially engaged bypass valves, and loose or damaged control linkages. The table below provides a troubleshooting checklist to help determine the cause of operational problems.

TROUBLESHOOTING CHECKLIST

Problem	Possible Cause	Corrective Action
Unit operates in one direction only	Control linkage bent or out of adjustment	Repair or replace linkage.
	Drive belt slipping or pulley damaged	Repair or replace drive belt or pulley
Vehicle does not drive/ track straight	Vehicle tires improperly inflated	Refer to General Specifications, Section 1, for recommended pressure
	Control linkage bent or out of adjustment	Repair or replace linkage
	Bypass assembly sticking	Repair or replace bypass
Unit is noisy	Oil level low or contaminated oil	Fill to proper level or change oil
	Excessive loading	Reduce vehicle loading
	Loose parts	Repair or replace loose parts
	Bypass assembly sticking	Repair or replace linkage
	Air trapped in hydraulic system	Purge hydraulic system

Problem	Possible Cause	Corrective Action
Unit has no/low power	Engine speed low	Adjust to correct setting
	Control linkage bent or out of adjustment	Repair or replace linkage
	Drive belt slipping or pulley damaged	Repair or replace drive belt or pulley
	Oil level low or contaminated oil	Fill to proper level or change oil
	Excessive loading	Reduce vehicle loading
	Bypass assembly sticking	Repair or replace linkage
	Air trapped in hydraulic system	Purge hydraulic system
Unit is operating hot	Debris buildup around transaxle	Clean off debris
	Cooling fan damaged	Repair or replace cooling fan
	Oil level low or contaminated oil	Fill to proper level or change oil
	Excessive loading	Reduce vehicle loading
	Air trapped in hydraulic system	Purge hydraulic system
Transaxle leaks oil	Damaged seals, housing, or gaskets	Replace damaged component
	Air trapped in hydraulic system	Purge hydraulic system

Product: New Holland MZ14H/MZ16H/MZ18H Tractor Service Repair Manual
Full Download: https://www.arepairmanual.com/downloads/new-holland-mz14h-mz16h-mz18h-tractor-service-repair-manual/

SERVICE AND MAINTENANCE PROCEDURES

Some of the service procedures presented on the following pages can be performed while the transaxle is mounted on the vehicle. Any repair procedures as mentioned in the repair section of this manual must be performed after the unit has been removed from the vehicle.

FLUID CHANGE PROCEDURE

This transaxle is factory filled, sealed and does not require oil maintenance. However, in the event of oil contamination or degradation, oil addition or change may alleviate certain performance problems.

1. Remove the transaxle from the vehicle.
2. Clean the oil fill port area of any debris.
3. Remove the oil fill port fitting.
4. Position the transaxle so the oil will drain completely out of the housing.
5. Fill the transaxle at the oil fill port according to illustration.
6. Install the oil fill port fitting.
7. Purging will be required. Refer to the Purging Procedures in this section.
8. Recheck the fluid level once the unit has been operated for approximately one minute.

Fluid Description	Volume
20W50 engine oil	54.1 fl.oz. (1600 ml) to 57.5 fl.oz. (1700 ml)

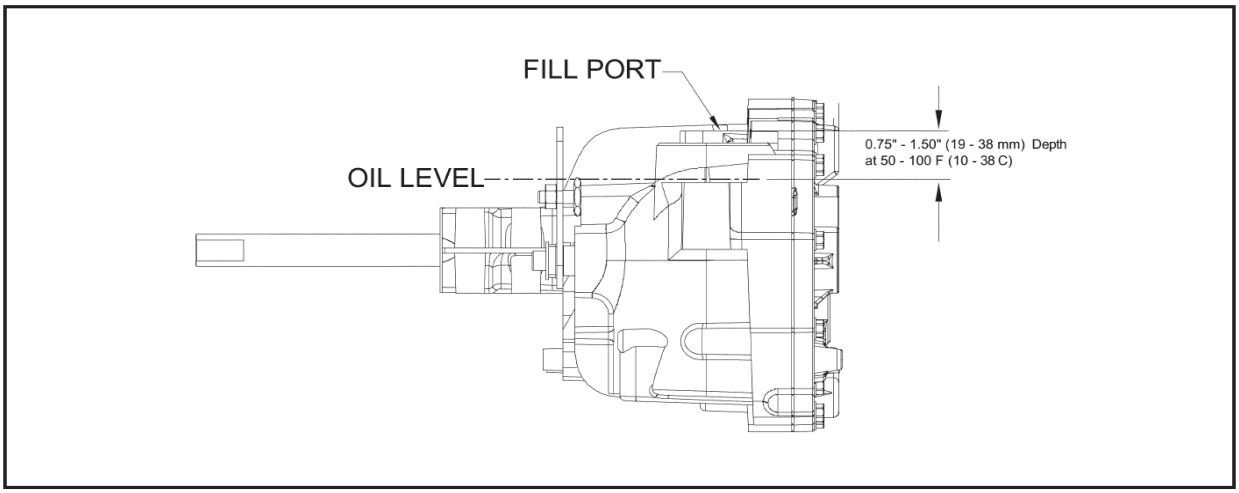

Sample of manual. Download All 122 pages at:
https://www.arepairmanual.com/downloads/new-holland-mz14h-mz16h-mz18h-tractor-service-repair-manual/