Product: New Holland LM1340/LM1440/LM1740 Telehandlers Service Repair Manual
Full Download: https://www.arepairmanual.com/downloads/new-holland-lm1340-lm1440-lm1740-telehandlers-service-repair-manual/

LM1340
LM1440
LM1740

TELEHANDLERS

Service Manual

Print N. 603.67.010.02 (I - 2004)

THIS ALERT SYMBOL SIGNALS IMPORTANT MESSAGES INVOLVING YOUR SAFETY.

Read and heed carefully the safety instructions listed and follow the precautions recommended to avoid potential risks and to safeguard your health and your safety.

You will find this symbol in the text of this Manual referred to the following key words:

***WARNING* - Cautions directed to avoid improper repair interventions involving potential consequences for the operator's safety.**

***DANGER* - These warnings qualify specifically potential dangers for the safety of the operator or other persons directly or indirectly involved.**

IMPORTANT NOTICE

All maintenance and repair interventions explained in this Manual **must be performed exclusively by the Service Organization of the Manufacturer**, observing strictly the instructions explained using, whenever necessary, the recommended specific tools.
Whoever performs the operations reported without following exactly the precautions is responsible on his own, for the damages that may result.

Neither the Factory nor any Organizations in its Distribution Network, including but not limited to national, regional or local distributors, are responsible for any liability arising from any damage resulting from defects caused by parts and/or components not approved by the Factory for use in maintaining and/or repairing products manufactured or merchandized by the Factory.
In any case, no warranty of any kind is made or shall be imposed with respect to products manufactured or merchandized by the Factory, when failures are caused by the use of parts and/or components not approved by the Factory.

Sample of manual. Download All 488 pages at:
https://www.arepairmanual.com/downloads/new-holland-lm1340-lm1440-lm1740-telehandlers-service-repair-manual/

Product: New Holland LM1340/LM1440/LM1740 Telehandlers Service Repair Manual
Full Download: https://www.arepairmanual.com/downloads/new-holland-lm1340-lm1440-lm1740-telehandlers-service-repair-manual/

AVOID ACCIDENTS

Most accidents and injuries occurring in industry, on the farm, at home or on the road, are caused by the failure of some individual to follow simple and fundamental safety rules or precautions. For this reason, MOST ACCIDENTS CAN BE PREVENTED by recognizing the real cause and taking the necessary precautions, before the accident occurs.

Regardless of the care used in design and construction of any type of equipment, there may be conditions that cannot be completely safeguarded against without interfering with reasonable accessibility and efficient operation.

A careful operator is the best insurance against accidents. The complete observance of one simple rule would prevent many thousands serious injuries each year.

This rule is: Never attempt to clean, lubricate or adjust a machine while it is in motion.

WARNING

On machines having hydraulically, mechanically and/or cable controlled equipment (such as showels, loaders, dozers, scrapers etc.) be certain the equipment is lowered to the ground before servicing, adjusting and/or repairing.
If it is necessary to have the equipment partially or fully raised to gain access to certain items, be sure the equipment is suitably supported by means other than the hydraulic lift cylinders, cable and/or mechanical device used for controlling the equipment.

MODEL CODES

The complete range of telescopic handlers (Telehandler) described in this manual is identified in the text by reference to the maximum extension of the telescopic arm.

The vehicles listed below may not be available in all countries or markets, therefore for the latest information consult your authorised dealer.

Model	**LM1340**			**LM1440**			**LM1740**	
	not stab.	small stab.	large stab.	not stab.	small stab.	large stab.	not stab.	stab.
Engine	88 kW (120 Cv) Turbo Aftercooler			88 kW (120 Cv) Turbo Aftercooler			88 kW (120 Cv) Turbo Aftercooler	
Max. lifting height (m)	12.300	12.450	12.450	13.300	13.550	13.550	16.240	16.600
Max. capacity (kg) at 500 mm from fork stop	4000	4000	4000	4000	4000	4000	4000	4000
Capacity at max. height (kg)	2600	3600	4000	2800	3000	3600	700	2500
Extension at max. height (m)	1.200	0.500	0.000	1.000	0.500	0.300	2.000	1.000
Max. longitudinal extension (m)	8.650			9.330			12.540	
Capacity at max. extension (kg)	700	1700	1800	650	1400	1500	0	450
Weight (kg)	11050			11970			12340	
Length (m)	5.850			6.070			6.135	

Sample of manual. Download All 488 pages at:
https://www.arepairmanual.com/downloads/new-holland-lm1340-lm1440-lm1740-telehandlers-service-repair-manual/

Service manual
LM1340 – LM1440 – LM1740
TELESCOPIC HANDLERS

GENERAL LIST OF CONTENTS

SECTION 00 – GENERAL

Description **Page**

General instructions 1
Safety rules 3
Product identification 6
Environmental considerations 9
Maintenance techniques 10

SECTION 10 – ENGINE

Description **Page**

Coding of engines of origin 3
Main engine specifications 4
General engine specifications 5
Generalities 7
Description of main mechanical components of the engine 13
Lubrication 24
Cooling 29
Fuel and mechanical injection 31
Injectionassembly 33
Removal of the engine transmission group from the vehicle 43
Engine overhaul on bench 46
Replacing the injectors 98
Adjustment of valve clearance 100
Setting of timing 101
Timing of the injection pump 102
Electrical components 103
Troubleshooting 104
Tooling 108
Data – Mounting plays 112

SECTION 21 - POWERSHIFT GEARBOX

Description **Page**

Powershift Gearbox 4x4 2
Driving with the powershift gearbox 2
Gearbox assembly 5
Idler gear case assembly 7
Gearbox operation 8
Transmission and Hydraulic oil circuit diagrams 15
Modulation valve operation 31
Torque converter and heat exchanger hydraulic oil circuit 34
Troubleshooting procedures 37
Pressure testing clutch and high pressure circuit 38
Pressure testing torque converter and cooler circuit 39
Check points 40
Assembly instructions 42
Overhaul 45
Special tools 104

SECTION 25 - FRONT AXLE

Description **Page**

Specifications 1
Description 2
Operation 3
Troubleshooting 4
Wheel toe-in check 5
Component overhaul 5
Front axle removal procedure 6
Front axle overhaul 7
Axle drive pinion bearing adjustment 52
How to install and adjust the axle drive pinion 54
Front drive shaft 57

SECTION 27 - REAR AXLE

Description **Page**

Specifications 1
Description 2
Operation diagram 3
Component overhaul 5
Rear axle removal procedure 5
Overhaul 6
Special tools 7

SECTION 33 - BRAKES

Description **Page**

Specifications 1
Power brakes 2
Parking brake 3
Brake disc adjustment 6
Troubleshooting 7
Brakes disassembly 8

SECTION 35 - HYDRAULIC SYSTEM

Description **Page**

Technical data 2
Description and operation 3
Steering system hydraulic circuit 3
Steering valve 4
Telescopic boom hydraulic circuit 6
Component operation 11
Front loader controls 15
Power steering (OSPQ) 19
Telescopic boom distributor 21
Auxiliary control distributor 24
Cylinders 25
Arms 35
Working platform 43
Procedure for the calibration of the personnel carrier platform electronic controller 47
Special tools 53

SECTION 55 - ELECTRICAL SYSTEM

Description **Page**

Chapter 1 – Electrical system general
Electrical equipment specifications 1
Electrical system and fuse 2
Controls and instruments 6
Use of the tip-over prevention system 16
Bulb replacement 23
Protecting the electrical systems during charging or welding 26
Starting the machine using jump leads 27
Temporary wiring repairs 28
Electrical system-general fault finding 30
Working platform 31
Special tools 46

Chapter 2 – Circuit diagrams
List of connectors 48
List of components 49
How to use the circuit diagrams 51
Diagram 1: Starter/Recharge/Warning/Indicators lights 54
Diagram 2: Transmission 56
Diagram 3: Wheel alignment/Hydraulic solenoids/Brake system 58
Diagram 4: Arm control 60
Diagram 5: Stabiliser 62
Diagram 6: Lights/Windscreen wiper 64
Diagram 7: Work lamps/Roof beacon light 66
Diagram 8: Tilting prevention system/Roof wiper 68
Diagram 9: Heating/Sound system/Electric socket/Interior lamp 70
Diagram 10: Air conditioner 72

Chapter 3 - Wiring list
Instrument panel wiring 75
Cab wiring 81
Front wiring 82
Rear wiring 83
Engine wiring 85

GENERAL INSTRUCTIONS

IMPORTANT NOTICE

All maintenance and repair interventions listed in this Manual must be performed exclusively by the Service Network of the Manufacturer, complying strictly with the indications herein and using, when required, the prescribed special tools.
Whoever performs service operations described herein without complying strictly with the instructions becomes solely responsible for any consequential damage that could occur.

ADJUSTING SHIMS

For each adjustment select the adjusting shims, measuring them one by one with a micrometer and adding to gether subsequently, the values measured. Do not rely on the measurement of the entire pack, that could be wrong, or the nominal value indicated on each ring.

SEALS FOR ROTATING SHAFTS

For correct installation of the seals for rotating shafts, please comply with the following precautions:

- prior to installation, keep the seals soaking for at least half an hour in the same oil they are going to seal;
- clean thoroughly the shaft and make sure that its working face is undamaged;
- direct the sealing lip toward the fluid; in the event the lip is of the hydro dynamic type, the grooves must be directed so that, in relation to the rotating direction of the shaft, they tend to return the fluid toward the inside of the sealing device;
- smear the sealing lip with a film of lubricant (oil to be preferred to grease) and fill with grease the gap between sealing lip and dust lip in twin lip seals;
- insert the seal in its seat, pressing it with a punch with a flat face; never strike it with a hammer or mallet;
- when pressing in the seal, make sure that it is inserted perpendicularly in relation to the seat and, once in position, make sure that, when required, it contacts the shoulder;
- to prevent the sealing lip of the seal being damaged by the shaft, insert appropriate protection during the installation of the two parts.

“0-RING” TOROIDAL SEALS

Lubricate O-rings before inserting them in the relevant seats to prevent them becoming twisted and rolled during installation, thus jeopardising their sealing capacity.

SELAING COMPOUNDS

Mating surface marked X must be smeared with a sealing compound recommended by the Manufacturer or an adequate equivalent.
Prior to applying the compound, prepare the surfaces in the following manner:

- remove all possible scaling with a metal brush;
- degrease the surfaces thoroughly using the degreesing agent recommended by the Manufacturer or an adequate equivalent.

BEARINGS

When installing bearings, it is recommended to:

- warm them up to 80° – 90 °C (176 – 194 °F) before installing them on the relevant shafts;
- cool them down before inserting them in the relevant seats with an outer fitting.

SPLIT PINS

When installing split pins, make sure that the cut is pointing in the direction of the load on the pin.
On the other hand, spiral elastic pins do not require any installation orientation.

NOTES ON SPARE PARTS

Use genuine **spare parts guaranteed by the Manufacturer** only.
Genuine spare parts are the only ones ensuring the same quality, the same life and the same safety as the originally mounted parts, since they are the same as the ones installed in production.
Only genuine parts from the manufacturer ensure this guarantee.
Orders for spare parts must include the following indications:

- model of the vehicle (commercial designation) and serial number;
- type and number of the engine;
- part number for the item ordered, as provided by the “Microfiches” or the “Spare Part Catalogue”, on which the order is based.

NOTES ON TOOLING

The tooling that the Manufacturer recommends and illustrates in this Manual is:

- studied and designed specifically for servicing vehicles of this range;
- required to ensure a reliable repair;
- accurately developed and inspected to provide effective and long lasting working.
  You are also reminded that correct tooling allows you to:
- to operate under optimised technical conditions;
- to achieve the best results;
- to save time and effort;
- to work in safer conditions.

WARNING

The wear limits provided for some items must be considered as recommended values, but not absolutely binding.
The indications “front”, “rear, “right”, “left” refer to different parts as seen seating from in the operator’s seat oriented in the normal travel direction of the vehicle.

HOW TO MOVE A VEHICLE WITHOUT BATTERIES

The cables of the external power supply must be connected exclusively to the respective terminals of the positive and negative cables of the vehicle, using efficient clamps providing adequate and safe contact. In the event it is necessary to check the operation of the electrical system of the vehicle, do it exclusively with the power supply connected. At the end of the inspection, disconnect all actuators and deactivate the power supply before disconnecting the cables.

SAFETY RULES

PAY ATTENTION TO THIS SYMBOL

This alert symbol announces important messages involving your safety.
Read carefully the safety instructions listed and follow the precautions recommended to avoid potential risks and to safeguard your health and your safety.
You will find this symbol in the text of this Manual with the following key words:

WARNING *- Cautions intended to avoid improper repair interventions involving potential consequences for the safety of the personnel performing the repairs.*

DANGER *- These warnings qualify specifically potential dangers for the safety of the operator or other persons directly or indirectly involved.*

AVOID ACCIDENTS

Most accidents, whether they occur in workshop, on the farm, at home or on the road, are caused by the failure of some individuals to follow simple and fundamental safety rules and precautions. For this reason MOST ACCIDENTS CAN BE PREVENTED by recognising the real cause and doing something about it before the accident occurs.

Regardless of the care used in the design and construction of any type of equipment, there are many conditions that cannot be completely safeguarded against without hindering reasonable accessibility and efficient operation.

A careful operator is the best insurance against an accident.

The complete observance of one simple rule would prevent many serious accidents.

DANGER. Never attempt to clean, lubricate or maintain a machine while it is in motion.

SAFETY RULES

SAFETY RULES

◊ Read and heed all safety rules before any intervention.

◊ Do not wear rings, wristwatches, jewellery, and loose or hanging apparels, such as ties, torn clothing, scarves, unbuttoned or unzipped jackets that can catch on moving parts. Wear proper safety equipment as recommended for the job. Examples: hard hat, heavy gloves, ear protection, safety glasses or goggles, reflector vests, respirator. Consult your employer for specific safety equipment requirements.

◊ Do not perform any service operation on the machine with a person seated in the operator's compartment, unless he is an authorised operator co-operating in the operation to be performed.

◊ Never attempt to operate the machine or its tools from any position other than seated in the operator's seat.

◊ Never perform any intervention on the machine with engine running unless this is prescribed.

◊ Cut-off the engine and make sure that all pressures in the hydraulic systems are released before removing caps, covers, valves etc.

◊ All service interventions must be performed with the utmost care and attention.

◊ Shop and/or field service platforms or ladders must be constructed and maintained in accordance with local and national regulations.

◊ Disconnect the batteries and tag all controls to signal that an intervention is in progress. Block the machine and all equipment that must be lifted.

◊ Do not check nor refill fuel tanks, as well as batteries, nor use starting fluid while smoking or near open flames since these fluids are flammable.

◊ Brakes are inactive when manually released for service interventions. Under such circumstances it is necessary to maintain the control of the machine using appropriate blocks or similar devices.

◊ The fuel-filling nozzle must be kept constantly inside the filling neck. Keep this contact from the beginning to the end of the fuelling operation to avoid the possibility that sparks due to static electricity are generated.

◊ Use only designated towing or attaching points. Use care in making attachments. Make sure pins and/or locks are secure before pulling. Stay clear of drawbars, cables or chains under load.

◊ To move a disabled machine, use a trailer or a low-boy, if available.

◊ To load/unload a machine from transporter, choose a level surface ensuring firm support to the wheels of truck or trailer. Anchor the machine securely to the bed of truck or trailer and block wheels or tracks with appropriate wedges.

◊ Use only approved grounded auxiliary power sources for heaters, chargers, pumps and similar equipment to reduce the hazards of electrical shocks.

◊ Lift and handle heavy parts with a lifting device of proper capacity.

◊ Beware of bystanders.

◊ Never pour gasoline or diesel fuel into open, wide and low containers.

◊ Never use gasoline, solvent or other flammable fluid to clean parts. Use exclusively qualified, non-flammable, non-toxic commercial solvents.

◊ When using compressed air for cleaning parts, use safety glasses with side shields or goggles.

◊ Limit pressure to 2.1 bar, in accordance with local and national regulations.

◊ Do not run the engine in closed areas without proper ventilation to remove deadly exhaust fumes.

◊ Do not smoke or permit any open flames or spark near when re-fuelling or handling flammable materials.

◊ Do not use an open flame as a light source to look for leaks or for inspection anywhere on the machine.

◊ Move with extreme care when working under the machine, its attachments and or on or near them. Always wear protective safety equipment as required, such as hard hat, goggles, safety shoes, ear plugs.

◊ When performing operations requiring running of the engine, have a qualified operator in the operator's seat at all times with the mechanic on sight. Place the transmission in neutral and set the brakes and safety lock.

◊ For field service, move machine to level ground, if possible, and block it. If work on an incline is absolutely necessary, first block machine and its attachments securely, than move it to level ground as soon as possible with a certain margin of safety.

◊ Do not trust worn and /or kinked chains and cables: do not use them for lifting or pulling operations. To handle them, always use heavy gloves.

◊ Be sure chains and cables are anchored and the anchor points are strong enough to handle the expected load. Keep exposed personnel clear of anchor points and cables or chains. No bystanders are allowed near the hooking points, chains or cables.

◊ Keep the area where maintenance operations are performed CLEAN and DRY. Eliminate immediately all water and oil spillages.

◊ Do not pile up oily or greasy rags; they represent a fire hazard. Store in a closed metal container.

Before starting machine, check, adjust and lock the operator's seat for maximum comfort and control of the machine. Be sure exposed personnel in the area of operation are clear of the machine before moving it or its attachments. Sound the horn.

◊ Do not carry loose objects in pockets that might fall unnoticed into open compartments.

◊ Wear proper protective equipment such as safety goggles or safety glasses with side shields, hard hat, safety shoes, heavy gloves when metal or other particles are apt to fly or fall.

◊ Wear welders protective equipment such as dark safety glasses, helmets, protective clothing, gloves and safety shoes, when welding or burning. Wear dark safety glasses near welding zones. DO NOT LOOK AT ARC WITHOUT PROPER EYE PROTECTION.

◊ Steel cables are frayed after prolonged use; always wear appropriate protections (heavy gloves, goggles etc.).

◊ Handle all parts carefully. Keep hands and fingers away from structures, gears or moving parts. Use and wear always the appropriate protections, such as safety goggles, gloves and safety shoes.

STARTING

◊ Do not run the engine in closed areas without proper ventilation to remove deadly exhaust fumes.

◊ Do not place head, body, limbs, feet, hands or fingers, near rotating fans or belts. Be especially alert near pusher fans.

ENGINE

◊ Loosen the radiator cap very slowly, to release pressure from the system, before removing it. All coolant level top-ups must be performed with engine inoperative or at low idle, if warm

◊ Do not run engine when refuelling and use care if the engine is hot due to the increased possibility of a fire if fuel is spilled.

◊ Never attempt to check or adjust fan belts when engine is running. Do not adjust engine fuel pump when machine is moving.

◊ Never lubricate the machine with engine running.

ELECTRICAL SYSTEM

◊ Should booster batteries be used, remember to connect both ends of the booster cables in the proper manner (+) with (+) and (-) with (-). Avoid short-circuits of the terminals. Follow thoroughly the instructions of this Manual.
Avoid short circuiting the terminals. BATTERY GAS IS HIGHLY FLAMMABLE. Leave battery box open to improve ventilation when recharging batteries. Never check charge by placing metal objects across the posts. Keep sparks or open flames away from batteries. Do not smoke near battery to guard against the possibility of causing an explosion.

◊ Before any intervention, make sure that there are no fuel or electrolyte leakages; eliminate them before proceeding with further work.

◊ When recharging batteries in closed ambient, make sure that there is appropriate ventilation to prevent possible accidental explosions due to the accumulation of gases generated during the recharge.

◊ Before any intervention, make sure that the main switch is OFF.

HYDRAULIC SYSTEM

◊ Fluid escaping under pressure from a very small hole can be almost invisible and can have sufficient force to penetrate the skin. Use a piece of cardboard or wood to search for suspected pressure leaks. DO NOT USE HANDS. If injured by escaping fluid, see a doctor at once. Serious infection or reaction can develop if proper medical treatment is not administered immediately.

◊ In case pressures must be measured, use instruments of adequate capacity. Always follow the recommended procedures.

WHEELS AND TYRES

◊ Make sure that the inflation pressure of the tyres is according to the specifications issued by the Manufacturer and check it periodically.

◊ Should the pressure be changed, stand on the side of the tyre at a safe distance.

◊ Pressure check operations must be performed with unloaded machine and cold tyres. Never use reconditioned tyre rims, since eventual weldings, heat-treatments or repairs not performed correctly can weaken the wheel, thus causing subsequent damages or dangers.

◊ Do not perform torch cutting or welding operations on rims with inflated tyres installed.

◊ Before operating on tyres, block all wheels, front and rear. After jacking the machine, block it with stands according to current safety rules and regulations.

◊ Before removing objects from the tyre tread, deflate it.

◊ Never inflate tyres with flammable gas; explosions and serious bodily injuries may result.

REMOVALS AND INSTALLATIONS

◊ Lift and handle all heavy parts with lifting devices of adequate capacity. Make sue that the parts are attached to lifting devices are properly slinged. Use the lifting eyes provided. Beware of persons in the vicinity.

◊ Handle all parts carefully. Keep hands and fingers away from structures, gears or moving parts. Use and wear always the appropriate protections, such s goggles, gloves and safety shoes.

◊ Prevent chains and cables from kinking. To handle them, always use heavy gloves.

PRODUCT IDENTIFICATION

The Telehandler and its main components are identified by various numbers and letters providing its identification by the Service network. The following information gives the location of the identification plates, of the numbers stamped on the machine and various examples of what can be found on the machine.

VEHICLE SERIAL NUMBER

The serial number is stamped on the front part of the machine, on the upper side of the main frame, right side.

NOTE: *The serial number and the identification number of the components can be requested by the Dealer when Spare Parts are ordered or interventions are required. These numbers are also required as help in identifying the machine in the event of theft. Keep them in a safe place.*

1

VEHICLE IDENTIFICATION PLATES

The vehicle identification plate is located on the left side of the seat location. Record here below the data for your machine.

TECHNICAL TYPE/MODEL_____

SERIAL NO. OF VEHICLE_____

YEAR_____

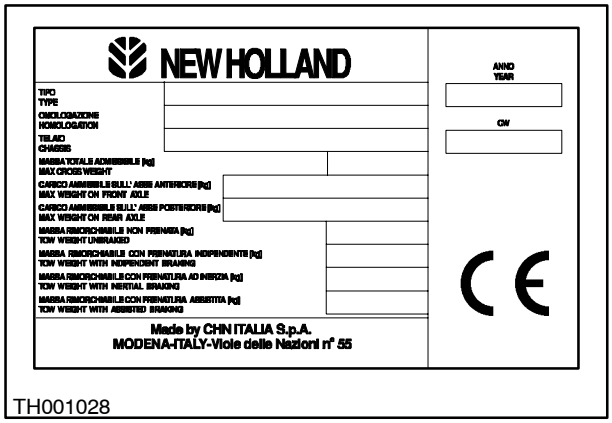

2

IDENTIFICATION OF ENGINE

The identification data of the engine are on the left side of the engine cylinder block. Please record here below these data for easier consultation, when required.

MODEL NO._____

SERIAL NO._____

DATE CODE_____

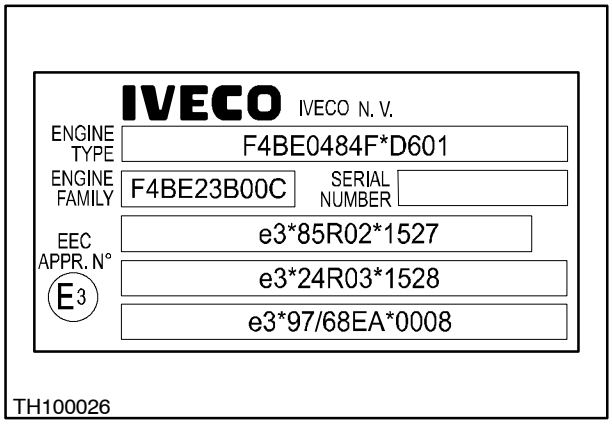

3

IDENTIFICATION OF FRONT AXLE

The serial number and the axle type are indicated on plate (1) located on the front side of the axle housing. Please record here below the data indicated for faster consultation when required.

AXLE TYPE _____

SERIAL NO. _____

DATE CODE _____

IDENTIFICATION OF 4x3 POWER SHIFT TRANSMISSION

The serial number and the model are indicated on plate (1) located on the lower side of the transmission. Please record here below the data indicated for faster consultation when required.

MODEL NO. _____

SERIAL NO. _____

DATE CODE _____

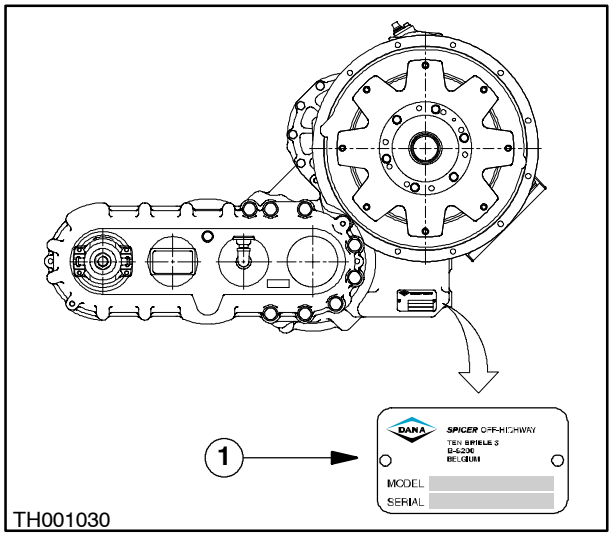

4

IDENTIFICATION OF REAR TRANSMSSION

The serial number is indicated on plate (1) located on the lower side of the rear transmission. Please record here below the data indicated for faster consultation when required.

AXLE TYPE _____

SERIAL NO. _____

DATE CODE _____

IDENTIFICATION PLATES IN THE CAB

The cab identification plate contains a series of further details and it is located on the left rear side of the seat. Please record here below the data indicated for faster consultation when required.

SERIAL NO._____

DATE CODE_____

The data relative to the engine are indicated on the conformity plates installed together with the Cab Plate. Please record here below the serial number indicated for faster consultation when required.

SERIAL NO._____

DATE CODE_____

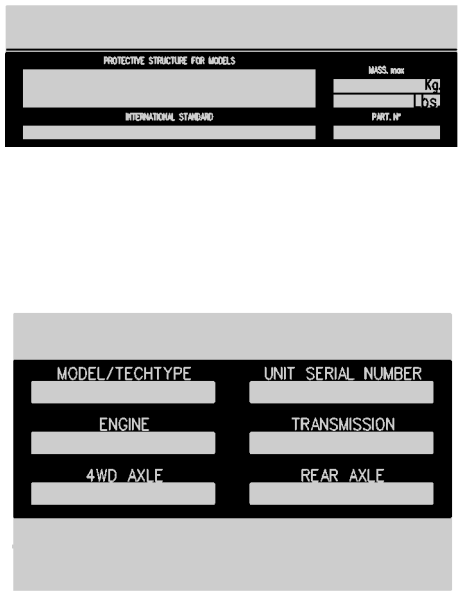

TH001058

5

ENVIRONMENTAL CONSIDERATIONS

The following recommendations can be useful:

- Become familiar and make sure you have well understood the relevant legislation in effect in your country.

- In the event no regulations exist, ask for specific information with the suppliers of lubricants, antifreeze and detergents regarding their effects on humans and the environment and how to store, handle and dispose of these substances safely.

Useful indications

1. Do not fill tanks with inadequate canisters or dispensing pressurised systems that could cause considerable spillage.

2. In general, avoid the contact of the skin with any fuel, oil, acid, solvent etc. The majority of them contain substance dangerous for your health.

3. Modern lubricants contain additives. Do not burn contaminated fuels and/or wed oils in normal heating burners.

4. Avoid spillage when draining used coolant mixtures, engine oils, transmission and hydraulic fluids, brake fluid. After draining, do not mix brake fluid or fuel with lubricants. Store them in a risk free manner until when they can be disposed of in an adequate way, in accordance with local regulations and the resources available.

5. Modern cooling mixtures, such as antifreeze and other additives, must be changed every two years. Maximum attention must be paid to prevent that they spill over the ground. They must be collected and disposed of so that do not create any danger.

6. Do not unseal air conditioning system by yourselves, since they can contain gases that must not be released into the atmosphere. The personnel specialised in air conditioners uses special equipment to charge and discharge air conditioning systems.

7. Repair at once any leakage or defect of the engine cooling system or hydraulic system.

8. Do not increase the pressure of any pressurised system, since this could cause serious problems to the components of the system.

9. Protect hoses when performing any welding, since a splash of welding materials could penetrate and burn them, causing a hole or weakening the wall with subsequent leakages of oil, coolant etc.

MAINTENANCE TECHNIQUES

GENERAL NOTICES

Clean the outside of all the components prior to performing any type of repair. Dirt and abrasive dust can reduce the efficient life expectancy of a component and result in expensive repairs.

The time spent in preparing and cleaning working surfaces is giving results, making work easier and safer, and the components overhauled will be more reliable and operate better.

Use cleaning fluids proven to be safe. Some types of fluid can cause serious problems to O-Rings and irritate the skin. It is necessary to check that the solvents are suitable to clean the components and that of they are free of risks for the health of workers.

Replace O-Rings, sealing rings and seals every time they are moved. Never use old O-Rings or seals and new ones together, independently from their conditions. Always lubricate new O-Rings and seals with hydraulic oil before installing them.

When replacing components, always use the tooling required by this type of work.

HOSES AND STEEL PIPES

Always replace hoses and steel pipes when the taper end or connections are damaged.

When a new hose is installed, connect it without tightening the ends and make sure that it is routed in the correct manner, before tightening the ends. Fixtures must be tightened just enough to hold the hose without squeezing it, avoiding rubbing as well.

After replacing a hose of moving components, make sure that the hose is not disturbed by the movement of the component in any position.

Make sure that all hoses installed are not choked or bent.

If hose connections are damaged, dented, choked or leaking, decrease the flow of oil and the productivity of the relevant actuators. Connections showing signs of displacement from their original pre-pressed position must be considered as already broken, since they are going to fail or separate soon.

A hose with a ragged outer sleeve allows water to penetrate. Thus, hidden corrosion of the reinforcing wire will develop along the entire length of the hose, with the subsequent failure of the hose itself.

If a hose swells, this indicates that there is an internal leakage due to a structural failure. This condition deteriorates very quickly and causes the failure of the hose.

Clogged, squeezed, excessively tensioned or deformed hoses are generally easily subject to flow reduction, decrement of the operational speed of the fluid and the final failure of the hose.

Loose hoses move freely and must be prevented from touching each other and nearby surfaces. This causes a rubbing action shortening the useful life of the hose.

CONNECTIONS WITH FRONT SEALING O-RINGS

When repairing connections with front sealing O-Rings, please comply with the following procedures.

WARNING: NEVER DISCONNECT, NOR TIGHTEN A HOSE OR A STEEL PIPE UNDER PRESSURE. IF IN DOUBT, MOVE THE CONTROL LVERS SEVERAL TIMES WITH THE ENGINE INOPERATIVE BEFORE DISCONNECTING A HOSE OR A STEEL PIPE.

1. Loosen the connections and separate the hose or steel pipe, then remove and eliminate the O-Rings from the connection.
2. Dip a new O-Ring in clean, hydraulic oil before installing it. Install the new O-Ring in the connection and, if necessary, hold it in its position with vaseline.
3. Install a new hose or steel pipe and tighten manually the connection holding, at the same time, the pipe still to prevent it from turning.
4. Use two wrenches to tighten the connection to the torque prescribed for its size. Please refer to the table to follow for the tightening torques.

NOTE: to ensure that a joint does not leak, it is important that the connections are neither excessively tightened nor too little.

SPECIFIC SEALING COMPOUNDS

The following sealing compounds must be used, complying with the indications provided by the Manual:

SEALANTS	COMMERCIAL NAME
Anaerobic sealant	LOCTITE 518 (liquid gasket)
RTV silicon sealant	LOCTITE SUPERFLEX 593,595 or 596 LOCTITE ULTRA BLUE 587 DOW CORNING SILASTIC 732 GENERAL ELECTRIC RTV 103 or 108
Pipe sealant	PST 592 (pipe sealant with teflon)
Locking compound for threads	LOCTITE 271/RED (sealant/locking for threads)

TIGHTENING VALUES FOR FASTENERS

Check periodically that the fasteners are properly tightened.

Based upon the tables to follow, determine the correct tightening torque when parts of the fastening components are checked, adjusted or replaced.

IMPORTANT: DO NOT use the values listed in the tables when the Manual indicates a different torque or tightening procedure for a specific application. The torque values are provided for general use only.

Make sure that the threads of the fasteners are clean and undamaged.

NOTE: *use a torque wrench to tighten fasteners correctly.*

MINIMUM TIGTENING TORQUES FOR FASTENERS

IN NEWTON-METRES (Nm)
FOR NORMAL INSTALLATION APPLICATIONS

METRIC BOLTS AND LOCK NUTS

NOMINAL DIMENSION	CLASS 5.8		CLASS 8.8		CLASS 10.9		LOCK NUT CL 8 with BOLT CL 8.8
	NOT PLATED	PLATED Zn/Cr	NOT PLATED	PLATED Zn/Cr	NOT PLATED	PLATED Zn/Cr	
M4	1.7	2.2	2.6	3.4	3.7	4.8	1.8
M6	5.8	7.6	8.9	12	13	17	6.3
M8	14	18	22	28	31	40	15
M10	28	36	43	56	61	79	30
M12	49	63	75	97	107	138	53
M16	121	158	186	240	266	344	131
M20	237	307	375	485	519	671	265
M24	411	531	648	839	897	1160	458

IDENTIFICATION
HEX SCREWS (WITHOUT NUT) AND ROUND HEAD BOLTS
CLASS 5.6 AND HIGHER

IDENTIFICATION OF THE MANUFACTURER

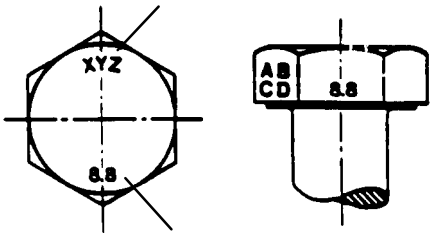

COMMERCIAL CLASS

HEX NUTS AND TIGHTENING NUTS
CLASS 05 AND HIGHER

IDENTIFICATION OF THE MANUFACTURER

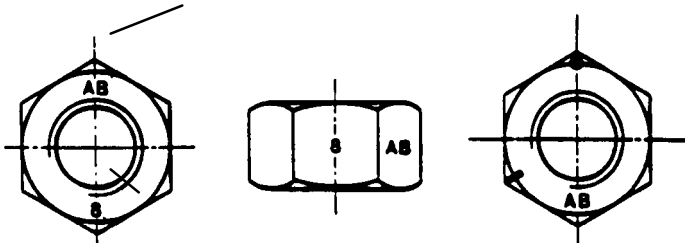

COMMERCIAL CLASS MARKING

MINIMUM TIGTENING TORQUES FOR FASTENERS

IN NEWTON-METRES (Nm)
FOR NORMAL INSTALLATION APPLICATIONS

INCH MEASUREMENT SCREWS AND LOCK NUTS

NOMINAL DIMENSION	GRADE SAE 2		GRADE SAE 5		GRADE SAE 8		LOCK NUTS		NOMINAL DIMENSION
	NOT PLATED OR SILVER PLATED	PLATED Zn/Cr GOLD	NOT PLATED OR SILVER PLATED	PLATED Zn/Cr GOLD	NOT PLATED OR SILVER PLATED	PLATED Zn/Cr GOLD	NOT PLATED OR SILVER PLATED	PLATED Zn/Cr GOLD	
1/4	6.2	8.1	9.7	13	14	18	6.9	9.8	1/4
5/16	13	17	20	26	28	37	14	20	5/16
3/8	23	30	35	46	50	65	26	35	3/8
7/16	37	47	57	73	80	104	41	57	7/16
1/2	57	73	87	113	123	159	61	88	1/2
9/16	81	104	125	163	176	229	88	125	9/16
5/8	112	145	174	224	244	316	122	172	5/8
3/4	198	256	306	397	432	560	217	306	3/4
7/8	193	248	495	641	698	904	350	494	7/8
1	289	373	742	960	1048	1356	523	739	1

IDENTIFICATION
SCREWS (WITHOUT NUT) AND ROUND HEADED SCREWS

GRADE SAE 2

GRADE SAE 5

GRADE SAE 8

NORMAL NUTS

HEX NUTS
GRADE SAE 5

HEX NUTS
GRADE SAE 8

LOCK NUTS

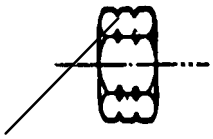

GRADE IDENTIFICATION
GRADE A: NO CUTS
GRADE B: ONE PERIMETER CUT
GRADE C: TWO PERIMETER CUTS

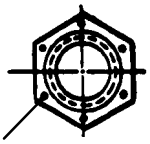

GRADE IDENTIFICATION
GRADE A: NEW MARK
GRADE B: THREE MARKS
GRADE C. SIX MARKS
THE MARKS ARE NOT COMPULSORILY LOCATED IN THE CORNERS

GRADE IDENTIFICATION

GRADE A. NO MARKS
GRADE B: LETTER B
GRADE C: LETTER C

GENERAL

NOTE: *"The Manufacturer" pursues a policy of constant improvements, thus reserves the right to modify at any moment technical and design data, without notice, and without any obligation to modify the machines previously manufactured.*

All the data provided in this Manual are subject to variations in production. Dimensions and weights are approximate and the illustrations do not necessarily show the machines in normal conditions. In order to have specific information about a determined machine, please consult an Authorised Dealer.

Model	**LM1340**			**LM1440**			**LM1740**	
	not stab.	small stab.	large stab.	not stab.	small stab.	large stab.	not stab.	stab.
Engine	88 kW (120 Cv) Turbo Aftercooler			88 kW (120 Cv) Turbo Aftercooler			88 kW (120 Cv) Turbo Aftercooler	
Max. lifting height (m)	12.300	12.450	12.450	13.300	13.550	13.550	16.240	16.600
Max. capacity (kg) at 500 mm from fork stop	4000	4000	4000	4000	4000	4000	4000	4000
Capacity at max. height (kg)	2600	3600	4000	2800	3000	3600	700	2500
Extension at max. height (m)	1.200	0.500	0.000	1.000	0.500	0.300	2.000	1.000
Max. longitudinal extension (m)	8.650			9.330			12.540	
Capacity at max. extension (kg)	700	1700	1800	650	1400	1500	0	450
Weight (kg)	11050			11970			12340	
Length (m)	5.850			6.070			6.135	

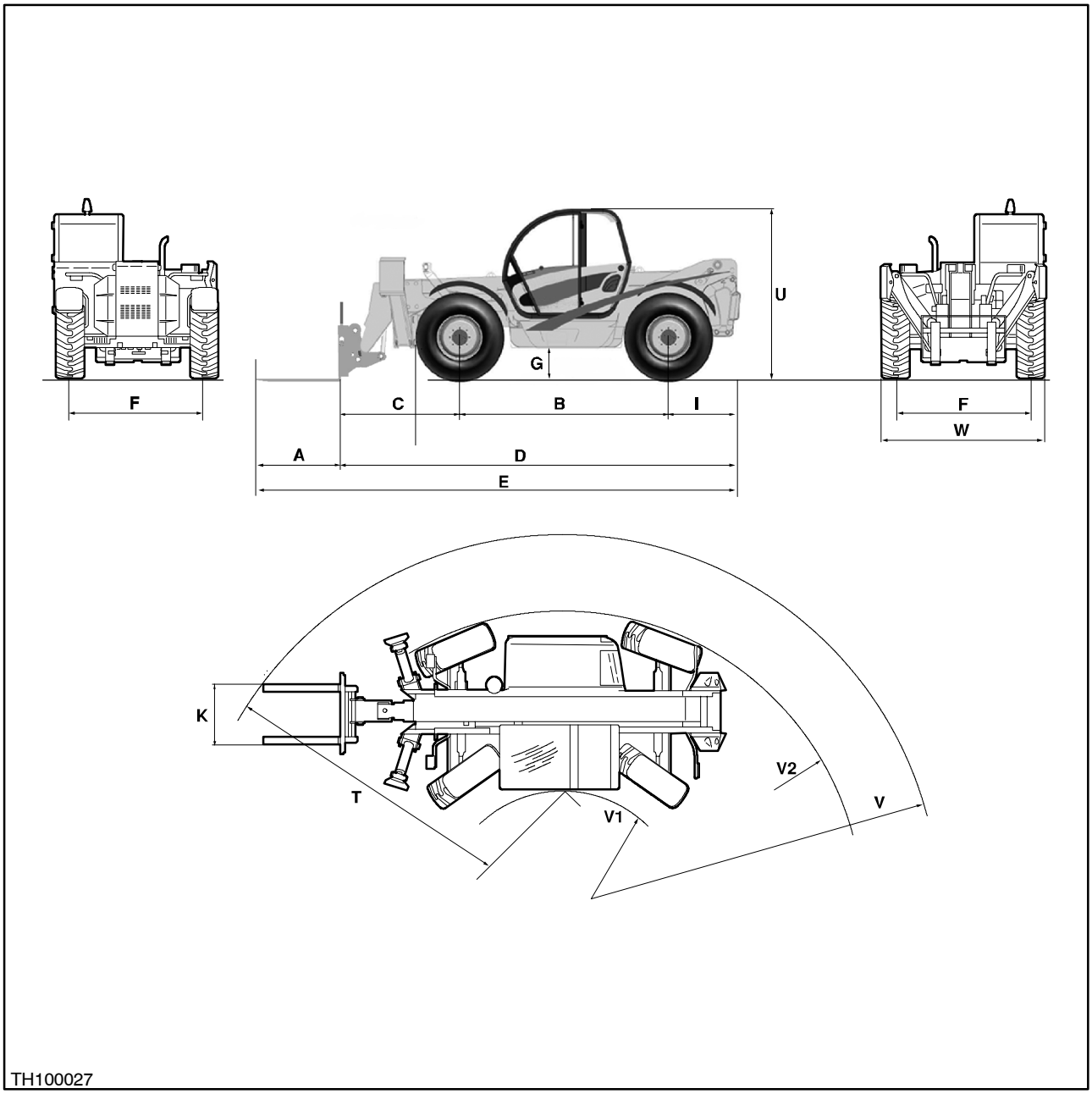

1

LM1340

A	1200 mm	K	1260 mm
B	3120 mm	T	4396 mm
C	1617 mm	U	2730 mm
D	5850 mm	V	5204 mm
E	7050 mm	V_1	980 mm
F	2050 mm	V_2	3890 mm
G	402* mm	W	2445 mm
I	1100 mm		

* Value measured with tyres 405/70x24

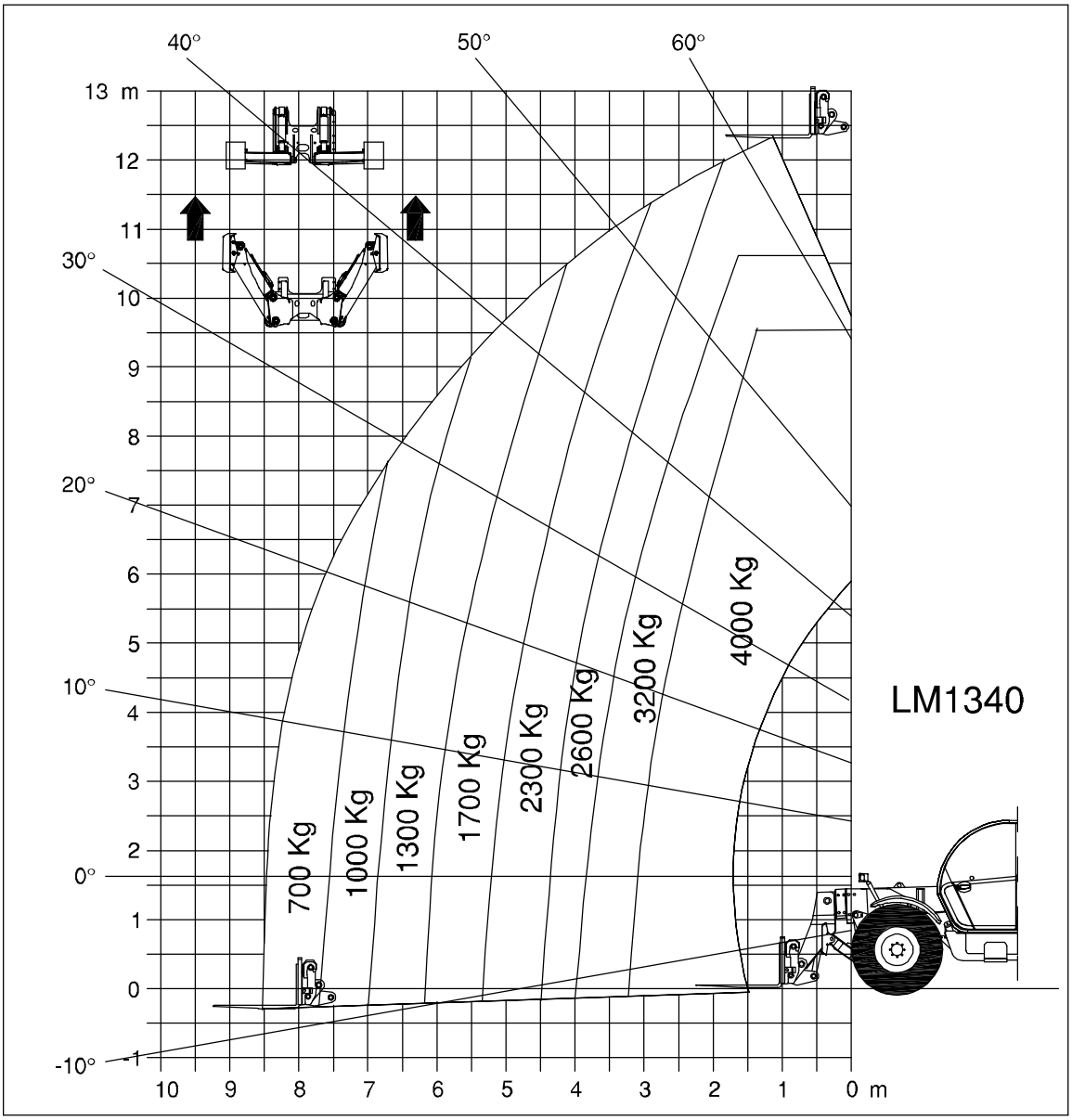

TH100029

2

LM1340 without stabilisers or with stabilisers raised and with rear axle look

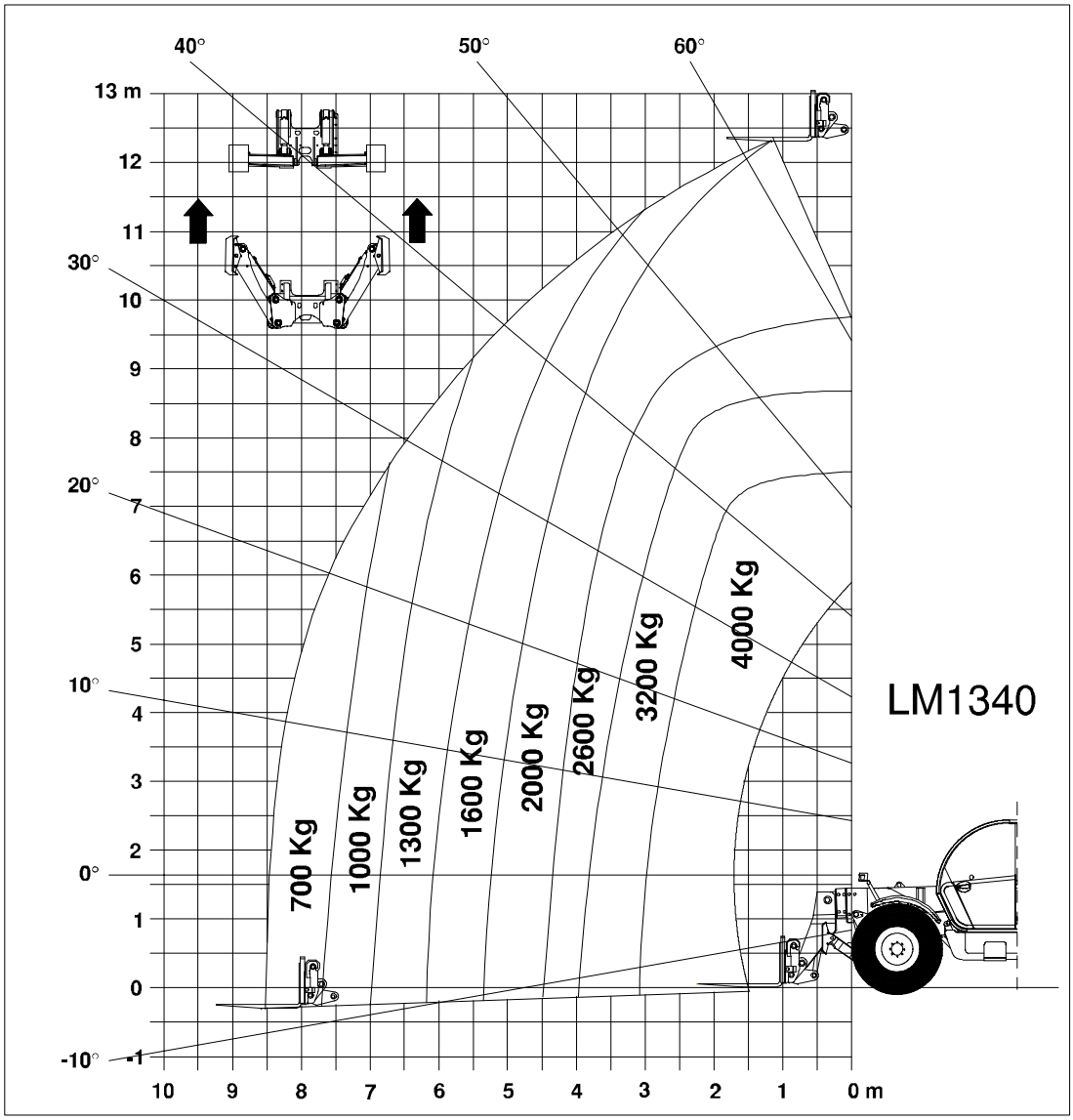

TH100030

3

LM1340 without stabilisers and without rear axle look

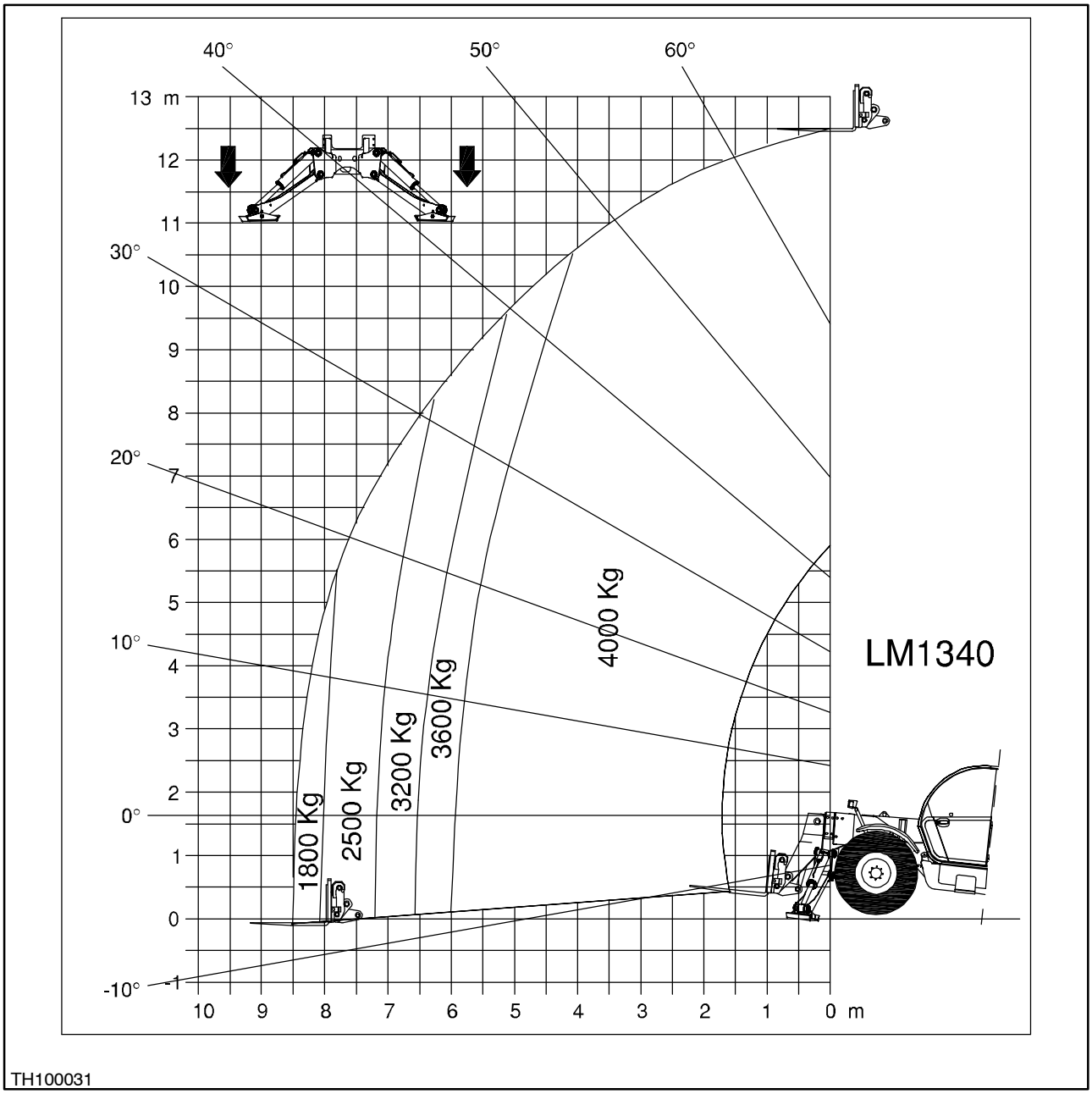

4

LM1340 with large stabilisers lowered

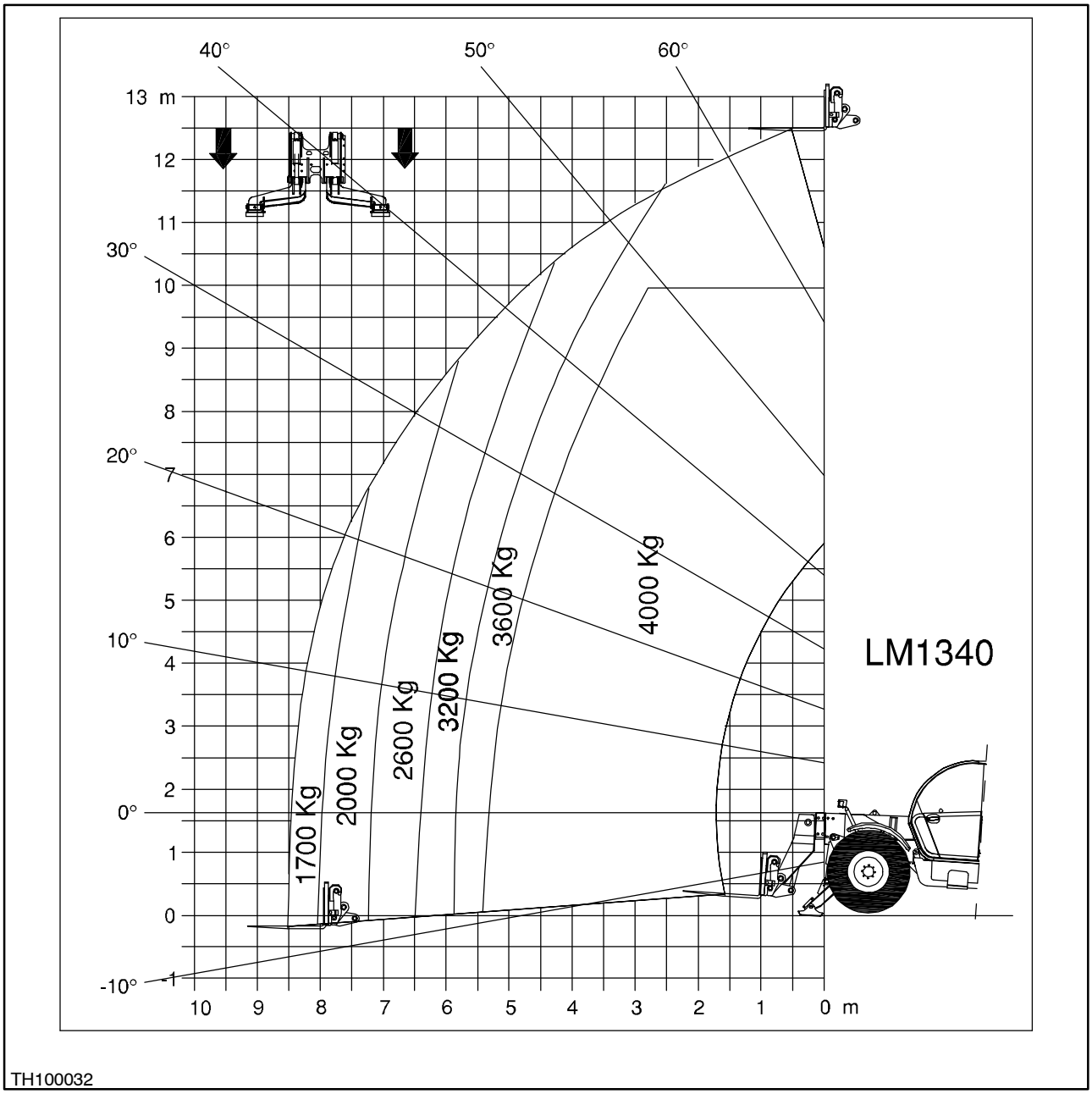

5

LM1340 with small stabilisers lowered

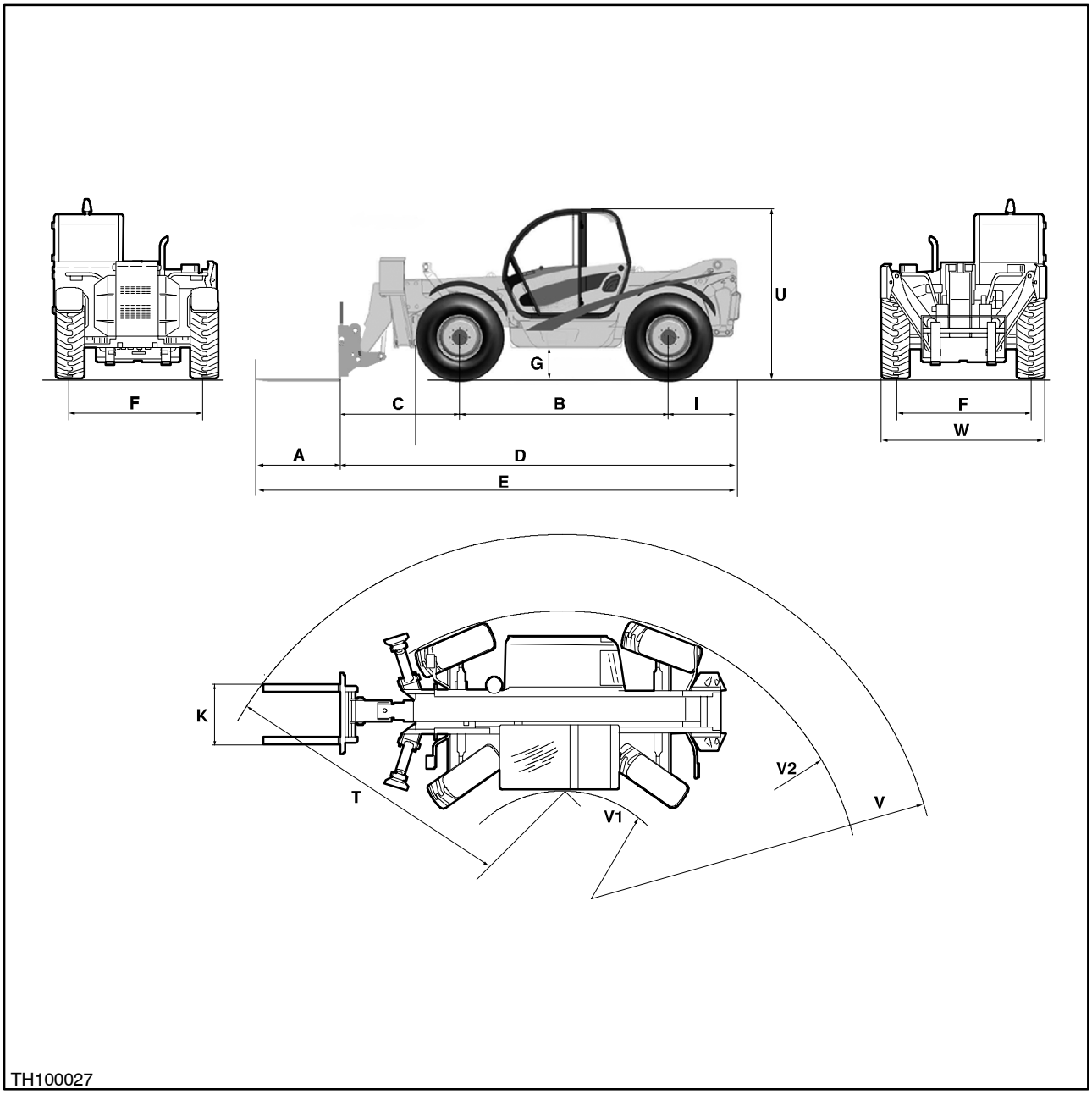

6

LM1440

A	1200 mm	K	1260 mm
B	3120 mm	T	4552 mm
C	1837 mm	U	2730 mm
D	6070 mm	V	5390 mm
E	7270 mm	V_1	980 mm
F	2050 mm	V_2	3890 mm
G	402* mm	W	2445 mm
I	1100 mm		

* Value measured with tyres 405/70x24

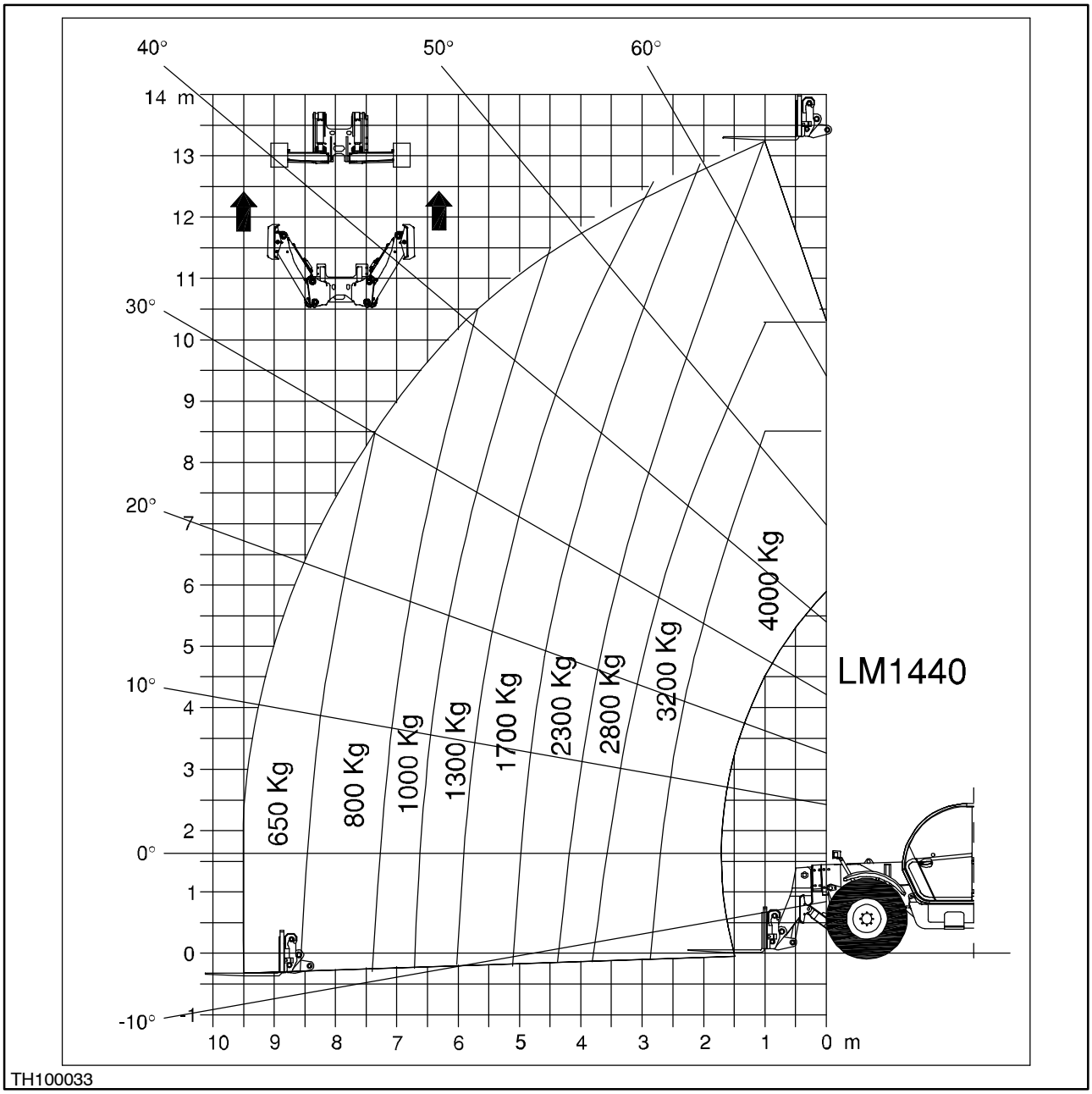

7

LM1440 without stabilisers or with stabilisers raised and with rear axle look

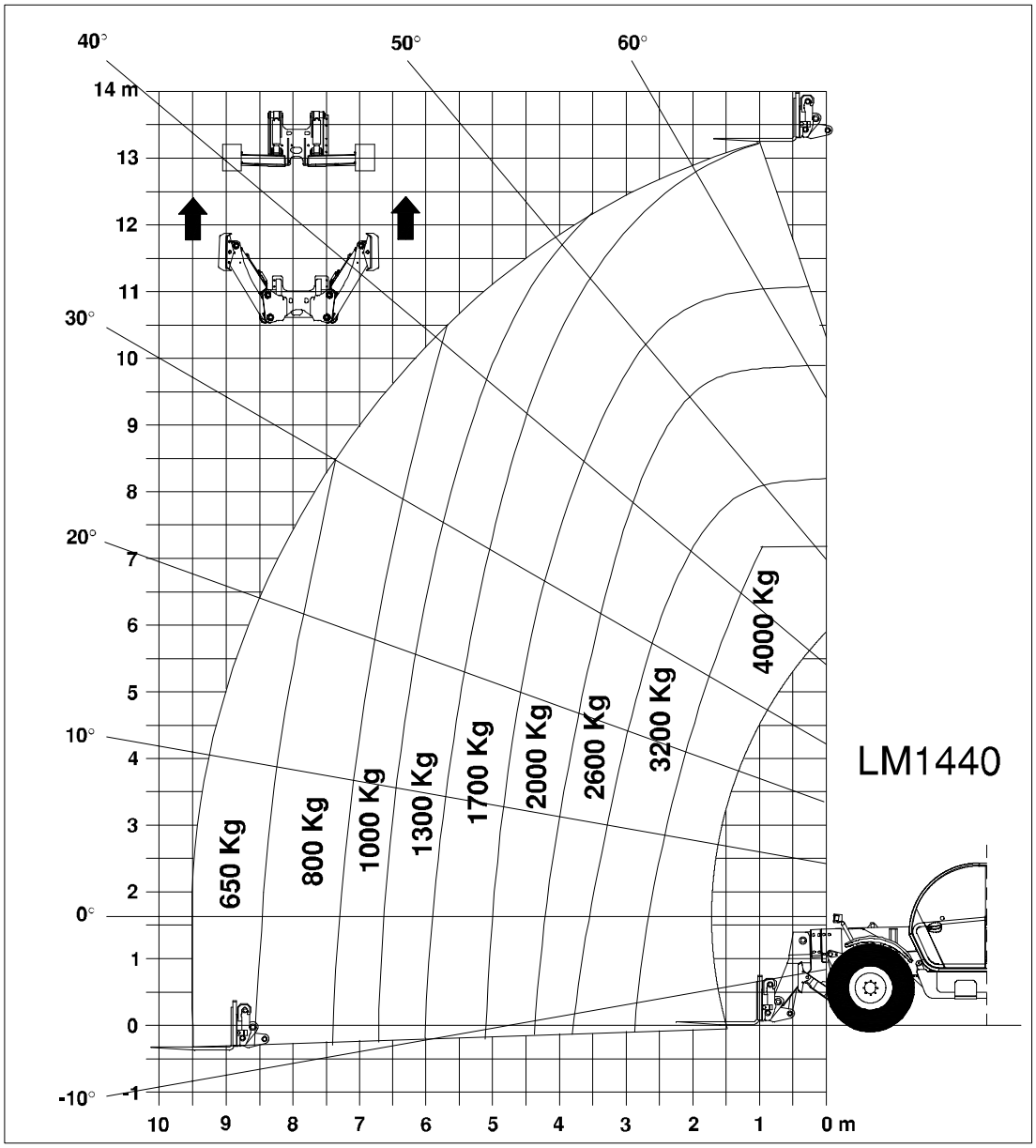

TH100034

8

LM1440 without stabilisers and without rear axle look

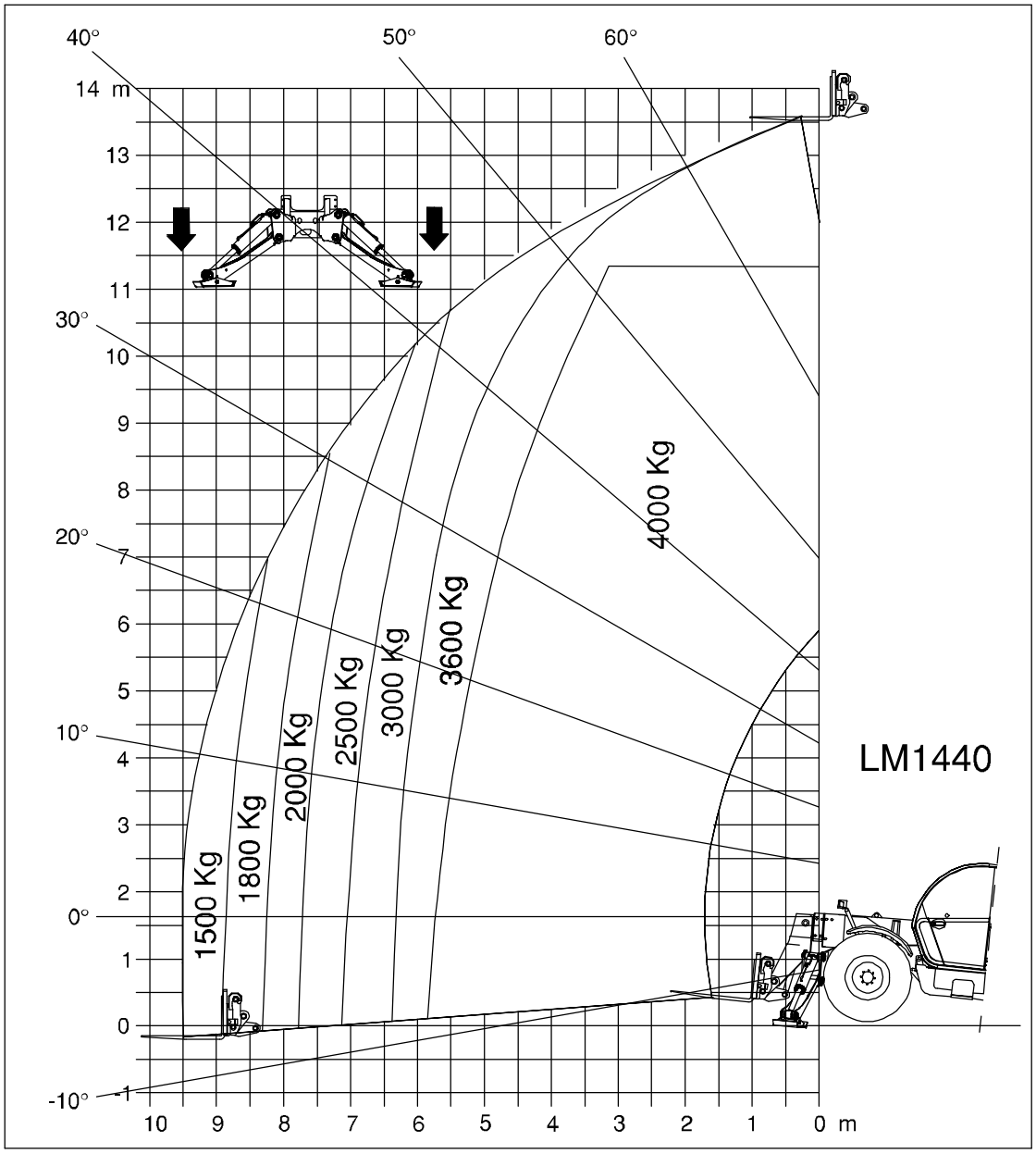

TH100035

9

LM1440 with large stabilisers lowered

Product: New Holland LM1340/LM1440/LM1740 Telehandler Service Repair Manual
Full Download: https://www.arepairmanual.com/downloads/new-holland-lm1340-lm1440-lm1740-telehandlers-service-repair-manual/

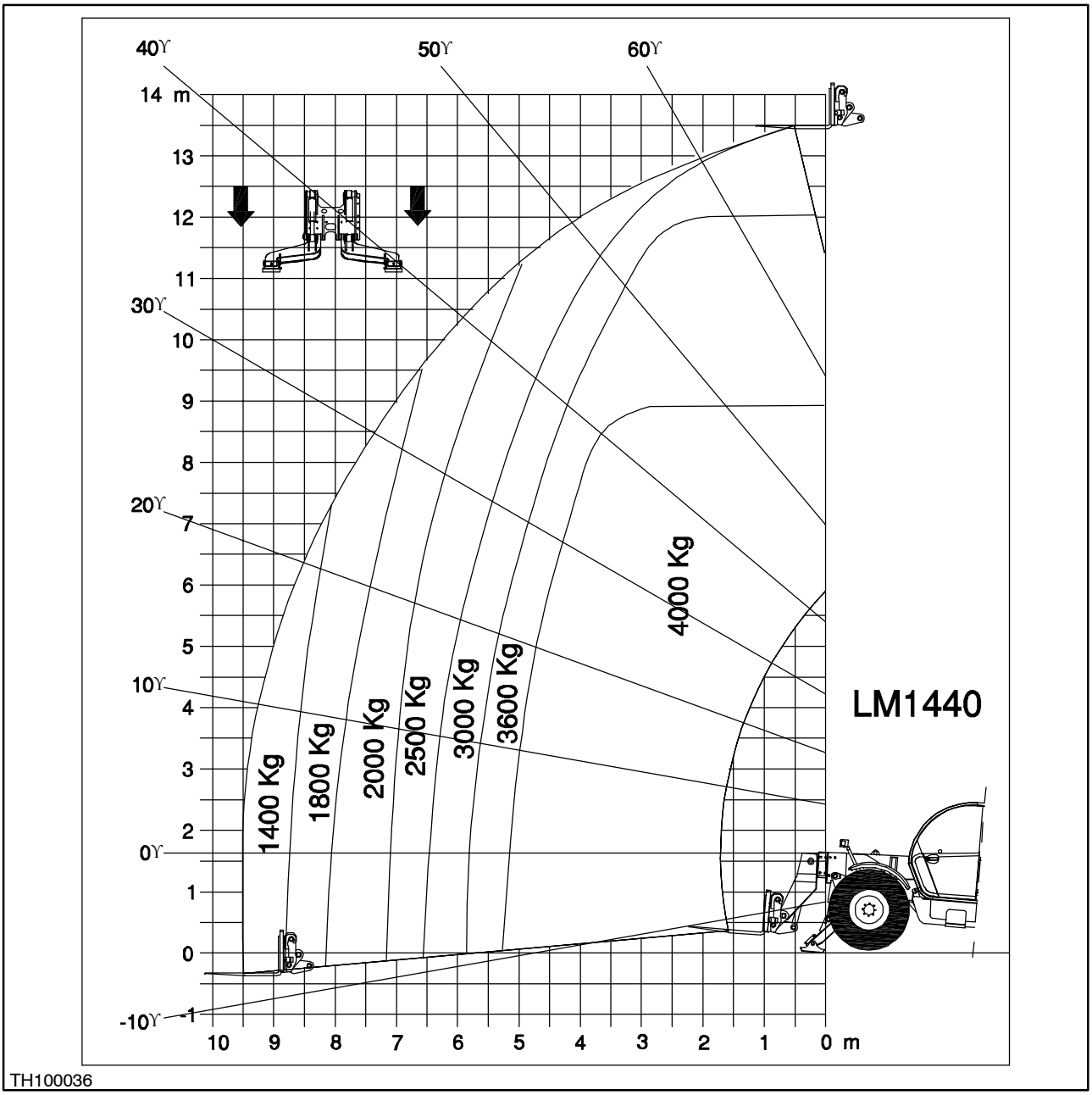

10

LM1440 with small stabilisers lowered

Sample of manual. Download All 488 pages at:
https://www.arepairmanual.com/downloads/new-holland-lm1340-lm1440-lm1740-telehandlers-service-repair-manual/