Product: FLEXI COIL 1740/2340/2850/3350/3850/4350 Air Cart Service Repair Manual
Full Download: https://www.arepairmanual.com/downloads/flexi-coil-1740-2340-2850-3350-3850-4350-air-cart-service-repair-manual/

flexi coil

1740 / 2340 / 2850 / 3350 / 3850 / 4350

Air Cart

1740 / 2340 PIN Y9S015001 and above

2850 / 3350 PIN Y8S015001 and above

3850 / 4350 PIN Y9S015001 and above

SERVICE MANUAL

Sample of manual. Download All 1290 pages at:
https://www.arepairmanual.com/downloads/flexi-coil-1740-2340-2850-3350-3850-4350-air-cart-service-repair-manual/

Part number 84329222
3rd edition English
March 2014
Replaces part number 87476939

Product: FLEXI COIL 1740/2340/2850/3350/3850/4350 Air Cart Service Repair Manual
Full Download: https://www.arepairmanual.com/downloads/flexi-coil-1740-2340
-2850-3350-3850-4350-air-cart-service-repair-manual/

Contents

INTRODUCTION

Rear axle system 27

[27.550] Non-powered rear axle 27.1

Hydraulic systems 35

[35.000] Hydraulic systems 35.1

[35.300] Reservoir, cooler, and filters 35.2

[35.744] Seeding hydraulic circuit 35.3

[35.748] Metering system hydraulic circuit 35.4

[35.912] Hydraulic seeding fan system 35.5

Wheels 44

[44.520] Rear wheels 44.1

[44.901] Caster wheels 44.2

Electrical systems 55

[55.000] Electrical system 55.1

[55.100] Harnesses and connectors 55.2

[55.301] Alternator 55.3

[55.404] External lighting 55.4

[55.516] Seeding control system 55.5

[55.517] Cab seeding controls 55.6

[55.545] Auger 55.7

[55.640] Electronic modules 55.8

[55.954] Split meter control system 55.9

[55.DTC] FAULT CODES 55.10

Metering system 61

[61.800] Split meter control system 61.1

[61.901] Metering mechanical drive 61.2

Sample of manual. Download All 1290 pages at:
https://www.arepairmanual.com/downloads/flexi-coil-1740-2340-2850-3350-3850-4350-air-cart-service-repair-manual/

[61.904] Product metering 61.3

Seeding 77

[77.100] Product handling and delivery drive system 77.1

[77.101] Seeding fan system 77.2

[77.904] Air distribution system 77.3

INTRODUCTION

Contents

INTRODUCTION

Foreword (*) 3
Safety rules and signal word definitions (*) 4
Safety rules 5
Safety rules 6
Safety rules (*) 7
Safety signs (*) 13
Safety signs (*) 34
Hand signals (*) 41
Safety rules - Ecology and the environment 43
Torque (*) 44
Torque – Hydraulic Tubes and Fittings 46
Basic instructions – Measuring voltages (*) 47
Basic instructions - Electrical testing - Connector inspection 49
Basic instructions - Electrical testing - Measuring voltage 53
Basic instructions - Electrical testing - Measuring resistance 54
Basic instructions - Electrical testing - Measuring continuity (resistance) 55
Basic instructions - Electrical testing - Short circuit to ground 56
Basic instructions - Electrical testing - Short circuit to high – Unwanted power 57
Basic instructions - Electrical testing - Short circuit pin to pin 58
Basic instructions - Electrical testing - Testing voltage 59
Basic instructions - Electrical testing - Continuity test – Open circuit 60
Basic instructions - Important notice regarding equipment servicing 61
Basic instructions - Shop and assembly 62
Abbreviation (*) 64
Power specification (*) 66
General specification (*) 68
General specification (*) 72
Definition Flow monitoring terminology 76
Hydraulic contamination 77
Product identification (*) 78
Product identification (*) 79
Product identification (*) 81

(*) See content for specific models

Foreword

1740	
2340	
50 Series Air Carts	

Technical information

This information in this manual has been structured using a unique coding environment. This is the way in which technical information is created, stored, and retrieved in the Technical Information Database. The coding has aligned locations with the warranty system.

All hydraulic information is now in Section 35. All Electrical / Electronic information is now in Section 55. Mechanical information is now in the section for that part or system.

Safety rules and signal word definitions

40 Series Air Carts	
50 Series Air Carts	

Personal safety

This is the safety alert symbol. It is used to alert you to potential personal injury hazards. Obey all safety messages that follow this symbol to avoid possible death or injury.

Throughout this manual and on machine decals, you will find the signal words Danger, Warning, and Caution followed by special instructions. These precautions are intended for the personal safety of you and those working with you.

Read and understand all the safety messages in this manual before you operate or service the machine.

⚠ DANGER ⚠

DANGER indicates a hazardous situation which, if not avoided, will result in death or serious injury. The color associated with Danger is RED.

M1169A

⚠ WARNING ⚠

WARNING indicates a hazardous situation which, if not avoided, could result in death or serious injury. The color associated with Warning is ORANGE.

M1170A

⚠ CAUTION ⚠

CAUTION, used with the safety alert symbol, indicates a hazardous situation which, if not avoided, could result in minor or moderate injury. The color associated with Caution is YELLOW.

M1171A

FAILURE TO FOLLOW DANGER, WARNING, AND CAUTION MESSAGES COULD RESULT IN DEATH OR SERIOUS INJURY.

Machine safety

NOTICE: *Notice indicates a situation which, if not avoided, could result in machine or property damage. The color associated with Notice is BLUE.*

Throughout this manual you will find the signal word Notice followed by special instructions to prevent machine or property damage. The word Notice is used to address practices not related to personal safety.

Information

NOTE: *Note indicates additional information which clarifies steps, procedures, or other information in this manual.*

Throughout this manual you will find the word Note followed by additional information about a step, procedure, or other information in the manual. The word Note is not intended to address personal safety or property damage.

Safety rules

Personal safety

This is the safety alert symbol. It is used to alert you to potential personal injury hazards. Obey all safety messages that follow this symbol to avoid possible death or injury.

Throughout this manual you will find the signal words DANGER, WARNING, and CAUTION followed by special instructions. These precautions are intended for the personal safety of you and those working with you.

Read and understand all the safety messages in this manual before you operate or service the machine.

⚠ DANGER indicates a hazardous situation that, if not avoided, will result in death or serious injury.

⚠ WARNING indicates a hazardous situation that, if not avoided, could result in death or serious injury.

⚠ CAUTION indicates a hazardous situation that, if not avoided, could result in minor or moderate injury.

FAILURE TO FOLLOW DANGER, WARNING, AND CAUTION MESSAGES COULD RESULT IN DEATH OR SERIOUS INJURY.

Machine safety

NOTICE: *Notice indicates a situation that, if not avoided, could result in machine or property damage.*

Throughout this manual you will find the signal word Notice followed by special instructions to prevent machine or property damage. The word Notice is used to address practices not related to personal safety.

Information

NOTE: *Note indicates additional information that clarifies steps, procedures, or other information in this manual.*

Throughout this manual you will find the word Note followed by additional information about a step, procedure, or other information in the manual. The word Note is not intended to address personal safety or property damage.

Safety rules

Personal safety

This is the safety alert symbol. It is used to alert you to potential personal injury hazards. Obey all safety messages that follow this symbol to avoid possible death or injury.

Throughout this manual and on machine decals, you will find the signal words DANGER, WARNING, and CAUTION followed by special instructions. These precautions are intended for the personal safety of you and those working with you.

Read and understand all the safety messages in this manual before you operate or service the machine.

DANGER indicates a hazardous situation which, if not avoided, will result in death or serious injury. The color associated with DANGER is RED.

WARNING indicates a hazardous situation which, if not avoided, could result in death or serious injury. The color associated with WARNING is ORANGE.

CAUTION, used with the safety alert symbol, indicates a hazardous situation which, if not avoided, could result in minor or moderate injury. The color associated with CAUTION is YELLOW.

FAILURE TO FOLLOW DANGER, WARNING, AND CAUTION MESSAGES COULD RESULT IN DEATH OR SERIOUS INJURY.

Machine safety

NOTICE: *Notice indicates a situation which, if not avoided, could result in machine or property damage. The color associated with Notice is BLUE.*

Throughout this manual you will find the signal word Notice followed by special instructions to prevent machine or property damage. The word Notice is used to address practices not related to personal safety.

Information

NOTE: *Note indicates additional information which clarifies steps, procedures, or other information in this manual.*

Throughout this manual you will find the word Note followed by additional information about a step, procedure, or other information in the manual. The word Note is not intended to address personal safety or property damage.

Safety rules

1740	
2340	
50 Series Air Carts	

⚠ WARNING

Chemical hazard!
Wear protective clothing and a face shield when working with chemicals. Do not allow chemicals to contact skin or eyes. Always follow the chemical manufacturer's instructions.
Failure to comply could result in death or serious injury.

W0052A

⚠ WARNING

Unexpected machine movement!
Disengage power, shut down the tractor, and be sure that all moving parts have stopped before servicing, adjusting, cleaning, or unclogging the equipment.
Failure to comply could result in death or serious injury.

W0924A

⚠ CAUTION

Escaping fluid!
Hydraulic fluid or diesel fuel leaking under pressure can penetrate the skin and cause infection or other injury. To prevent personal injury: Relieve all pressure before disconnecting fluid lines or performing work on the hydraulic system. Before applying pressure, make sure all connections are tight and all components are in good condition. Never use your hand to check for suspected leaks under pressure. Use a piece of cardboard or wood for this purpose. If injured by leaking fluid, see your doctor immediately.
Failure to comply could result in minor or moderate injury.

C0104A

⚠General safety rules⚠

Use caution when operating the machine on slopes. Raised equipment, full tanks and other loads will change the center of gravity of the machine. The machine can tip or roll over when near ditches and embankments or uneven surfaces.

Never permit anyone to ride on the machine.

Never operate the machine under the influence of alcohol, drugs or while otherwise impaired.

Pay attention to overhead power lines and hanging obstacles. High voltage lines may require significant clearance for safety.

Hydraulic oil or diesel fuel leaking under pressure can penetrate the skin, causing serious injury or infection.

DO NOT use your hand to check for leaks. Use a piece of cardboard or paper.

Stop engine, remove key and relieve the pressure before connecting or disconnecting fluid lines.

Make sure all components are in good condition and tighten all connections before starting the engine or pressurizing the system.

If hydraulic fluid or diesel penetrates the skin, seek medical attention immediately.

Continuous long term contact with hydraulic fluid may cause skin cancer. Avoid long term contact and wash the skin promptly with soap and water.

Keep clear of moving parts. Loose clothing, jewelry, watches, long hair and other loose or hanging items can become entangled in moving parts.

Wear protective equipment when appropriate.

DO NOT attempt to remove material from any part of the machine while it is being operated or components are in motion.

Make sure all guards, shields and handrails are in good condition and properly installed before operating machine. Never operate the machine with shields removed. Always close access doors or panels before operating the machine.

Dirty or slippery steps, ladders, walkways and platforms can cause falls. Make sure these surfaces remain clean and clear of debris.

A person or pet within the operating area of a machine can be struck or crushed by the machine or its equipment. DO NOT allow anyone to enter the work area.

Raised equipment and/or loads can fall unexpectedly and crush persons underneath. Never allow anyone to enter the area underneath raised equipment during operation.

Review this manual before each season of use.

Never allow anyone unfamiliar, untrained, or complacent to operate the implement.

Use extreme care when cleaning, filling, or adjusting the implement.

DO NOT enter tank unless another person is present.

DO NOT work around rotating equipment. Loose clothing, rings, watches, etc. may get caught and cause serious injury.

⚠Air and air hoses⚠

COMPRESSOR HOSES may move unexpectedly when suddenly disconnected.

USE PROPER air nozzles. Never use compressed air to clean off clothes or otherwise direct it toward yourself.

⚠General maintenance safety⚠

Keep area used for servicing the machine clean and dry. Clean up spilled fluids.

Service machine on a firm level surface.

Install guards and shields after servicing the machine.

Close all access doors and install all panels after servicing the machine.

Do not attempt to clean, lubricate, clear obstructions or make adjustments to the machine while it is in motion or while the engine is running.

Always make sure working area is clear of tools, parts, other persons and pets before you start operating the machine.

Unsupported hydraulic cylinders can lose pressure and drop the equipment causing a crushing hazard. Do not leave equipment in a raised position while parked or during service, unless securely supported.

Incorrect towing procedures can cause accidents. When towing a disabled machine follow the procedure in this manual. Use only rigid tow bars.

Stop the engine, remove key and relieve the pressure before disconnecting or connecting fluid lines.

Stop the engine and remove key before disconnecting or connecting electrical connections.

Replace damage or worn tubes, hoses, electrical wiring, etc.

When welding follow the instructions in the manual. Always disconnect battery before welding on machine. Always wash your hands after handling battery components.

⚠Wheels and tires⚠

Make sure tires are correctly inflated. Do not exceed recommended load or pressure. Follow instruction in the manual for proper tire inflation.

Tires are heavy. Handling tires without the proper equipment could cause death or serious injury.

Never weld on a wheel rim with a tire installed. Always remove tire completely from rim prior to welding.

Always have a qualified tire technician service the tires and rims. If a tire has lost all pressure, take the tire and rim to a tire shop or your dealer for service. Explosive separation of the tire can cause serious injury.

⚠ DANGER

Explosion hazard!
Welding to a wheel can create an explosive air and gas mixture. Removing air from the tire or loosening the tire on the wheel (breaking the bead) will NOT eliminate the hazard. ALWAYS remove the tire completely from the wheel before welding.
Failure to comply will result in death or serious injury.

D0033A

⚠Driving on public roads and general transportation safety⚠

The Slow Moving Vehicle (SMV) sign must be located at the rear of the implement.

Comply with local laws and regulations.

Use appropriate lighting to meet local regulations.

Make sure Slow Moving Vehicle (SMV) emblem and/or Speed Indicator Symbol (SIS) is visible.

Use safety chains for trailed equipment when provided with machine or equipment.

Lift implements and attachments high enough above ground to prevent accidental contact with road.

When transporting equipment or machine on a transport trailer, make sure it is properly secured. Be sure the SMV or SIS on the equipment or machine is covered while being transported on a trailer.

Be aware of overhead structures or power lines and make sure the machine and/or attachments can pass safely under.

Travel speed should be such that complete control and machine stability is maintained at all times.

Slow down and signal before turning.

Pull over to allow faster traffic to pass.

Follow correct towing procedure for equipment with or without brakes.

⚠Fire and explosion prevention⚠

Fuel and oil that is leaked or spilled on hot surfaces or electrical components can cause a fire.

Crop materials, trash, debris, bird nests or flammable material can ignite on hot surfaces.

Always have a fire extinguisher on or near the machine.

Make sure the fire extinguisher(s) is maintained and serviced according to the manufacturer's instructions.

At least once each day and at the end of the day remove all trash and debris from the machine especially around hot components such as engine, transmission, exhaust, battery, etc. More frequent cleaning of your machine may be necessary depending on the operating environment and conditions.

At least once each day, remove debris accumulation around moving components such as bearings, pulleys, belts, gears cleaning fan, etc. More frequent cleaning of your machine may be necessary depending on the operating environment and conditions.

Inspect the electrical system for loose connections or frayed insulation. Repair or replace loose or damaged parts.

Do not expose the machine to flames, burning brush or explosives.

Promptly investigate any unusual smells or odors that may occur during operation of the machine.

⚠General battery safety⚠

Always wear eye protection when working with batteries.

Do not create sparks or have open flame near battery.

Ventilate when charging or using in an enclosed area.

Disconnect Negative (-) first and reconnect Negative (-) last.

When welding on the machine, disconnect both terminals of the battery.

Do not weld, grind or smoke near a battery.

Follow manufacturer's instructions when storing and handling batteries.

CALIFORNIA Proposition 65 Warning Diesel engine exhaust and some of its constituents are known to the State of California to cause cancer, birth defects, and other reproductive harm. Battery posts, terminals and related accessories contain lead and lead compounds. Wash hands after handling.

Battery acid causes burns. Batteries contain sulfuric acid. Avoid contact with skin, eyes or clothing. Antidote (external): Flush with water. Antidote (eyes): flush with water for 15 minutes and seek medical attention immediately. Antidote (internal): Drink large quantities of water or milk. Do not induce vomiting. Seek medical attention immediately.

Keep out of reach of children and other unauthorized persons.

⚠Reflectors and warning lamps⚠

Flashing amber warning lamps must be used when operating on the public roads.

⚠Personal Protection Equipment (PPE)⚠

Wear personal protective equipment such as hard hat, safety glasses or goggles, heavy gloves, hearing protection, protective clothing, etc.

⚠Do not operate tag⚠

Before you start servicing the machine, attach a 'Do Not Operate' warning tag to the machine in an area that will be visible.

⚠Hazardous chemicals⚠

If you are exposed to or come in contact with hazardous chemicals you can be seriously injured. The fluids, lubricants, paints, adhesives, coolant, etc. required for the function of your machine can be hazardous. They may be attractive and harmful to domestic animals as well as humans.

Material Safety Data Sheets (MSDS) provide information about the chemical substances within a product, safe handling and storage procedures, first aid measures and procedures to be taken in the event of a spill or accidental release. MSDS are available from your dealer.

Before you service your machine check the MSDS for each lubricant, fluid, etc. used in this machine. This information indicates the associated risks and will help you service the machine safely. Follow the information in the MSDS, on manufacturer containers, as well as the information in this manual when servicing the machine.

Dispose of all fluids, filters and containers in an environmentally safe manner according to local laws and regulations. Check with local environmental and recycling centers or your dealer for correct disposal information.

Store fluids and filters in accordance with local laws and regulations. Use only appropriate containers for the storage of chemicals or petrochemical substances.
Keep out of reach of children or other unauthorized persons.

Additional precautions are required for applied chemicals. Obtain complete information from the manufacturer or distributor of the chemicals before using them.

⚠Utility safety⚠

When digging or using ground engaging equipment, be aware of buried cables and other services. Contact your local utilities or authorities, as appropriate to determine the locations of services.

Make sure the machine has sufficient clearance to pass in all directions. Pay special attention to overhead power lines and hanging obstacles. High voltage lines may require significant clearance for safety. Contact local authorities or utilities to obtain safe clearance distances from high voltage power lines.

Retract raised or extended components, if necessary. Remove or lower radio antennas or other accessories. Should a contact between the machine and an electric power source occur the following precautions must be taken: Stop the machine movement immediately. Apply the park brake, stop the engine and remove the key. Check if you can safely leave the cab or your actual position without contact with electrical wires. If not, stay in your position and call for help. If you can leave your position without touching lines, jump clear of the machine to make sure you do not make contact with the ground and the machine at the same time. Do not permit anyone to touch the machine until power has been shut off to the power lines.

⚠Electrical storm safety⚠

Do not operate machine during an electrical storm.

If you are on the ground during an electrical storm, stay away from machinery and equipment. Seek shelter in a permanent, protected structure.

If an electrical storm should strike during operation, remain in the cab. Do not leave the cab or operator's platform. Do not make contact with the ground or objects outside the machine.

⚠Mounting and dismounting⚠

Mount and dismount the machine only at designated locations that have handholds, steps or ladders.

Do not jump off the machine.

Make sure steps, ladders and platforms remain clean and clear of debris and foreign substances. Injury may result from slippery surfaces.

Face the machine when mounting and dismounting.

Maintain a three-point contact with steps, ladders and handholds.

Never mount or dismount from a moving machine.

⚠Working at heights ⚠

When the normal use and maintenance of the machine requires working at heights: Correctly use installed steps, ladders and railings. Never use ladders, steps or railings while the machine is moving. Do not stand on surfaces which are not designed as steps or platforms.

Do not use the machine as a lift, ladder or platform for working at heights.

Safety signs

50 Series Air Carts	

The following safety signs are placed on your machine as a guide for your safety and for those working with you. Walk around the machine and note the content and location of these safety signs before operating your machine.

Keep safety signs clean and legible. Clean safety signs with a soft cloth, water, and a gentle detergent. Do not use solvent, gasoline, or other harsh chemicals. Solvents, gasoline, and other harsh chemicals may damage or remove safety signs.

Replace all safety signs that are damaged, missing, painted over, or illegible. If a safety sign is on a part that is replaced, make sure the safety sign is installed on the new part. See your dealer for replacement safety signs.

Safety signs that display the “Read Operator’s Manual” symbol are intended to direct the operator to the operator’s manual for further information regarding maintenance, adjustments, or procedures for particular areas of the machine. When a safety sign displays this symbol, refer to the appropriate page of the operator’s manual.

NOTE: *New decals are available from your Flexi-Coil dealer.*

Tow behind air cart - two tank

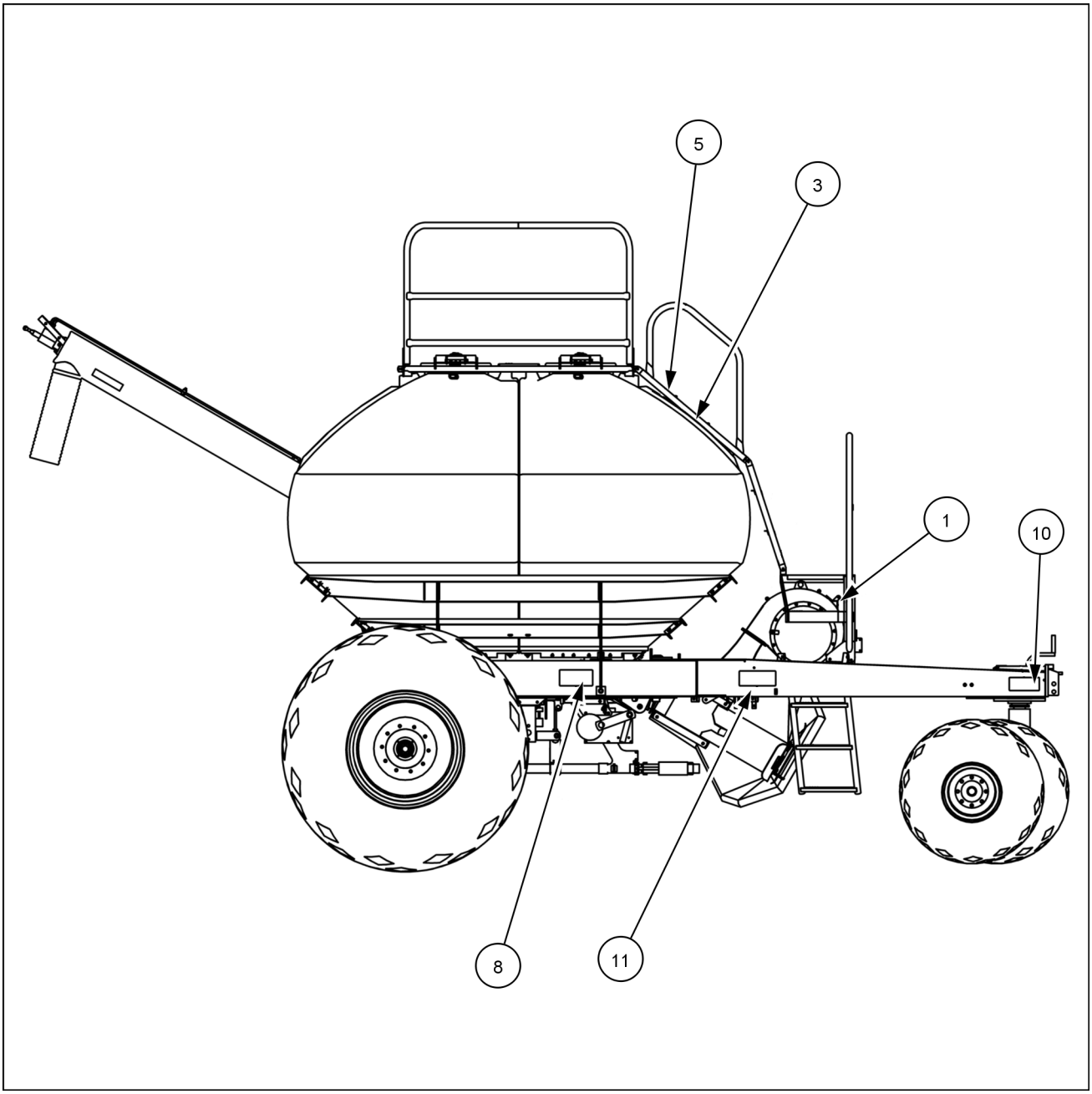

SAIL14SE00065HA 1

Safety decal locations - Tow behind air cart - right side

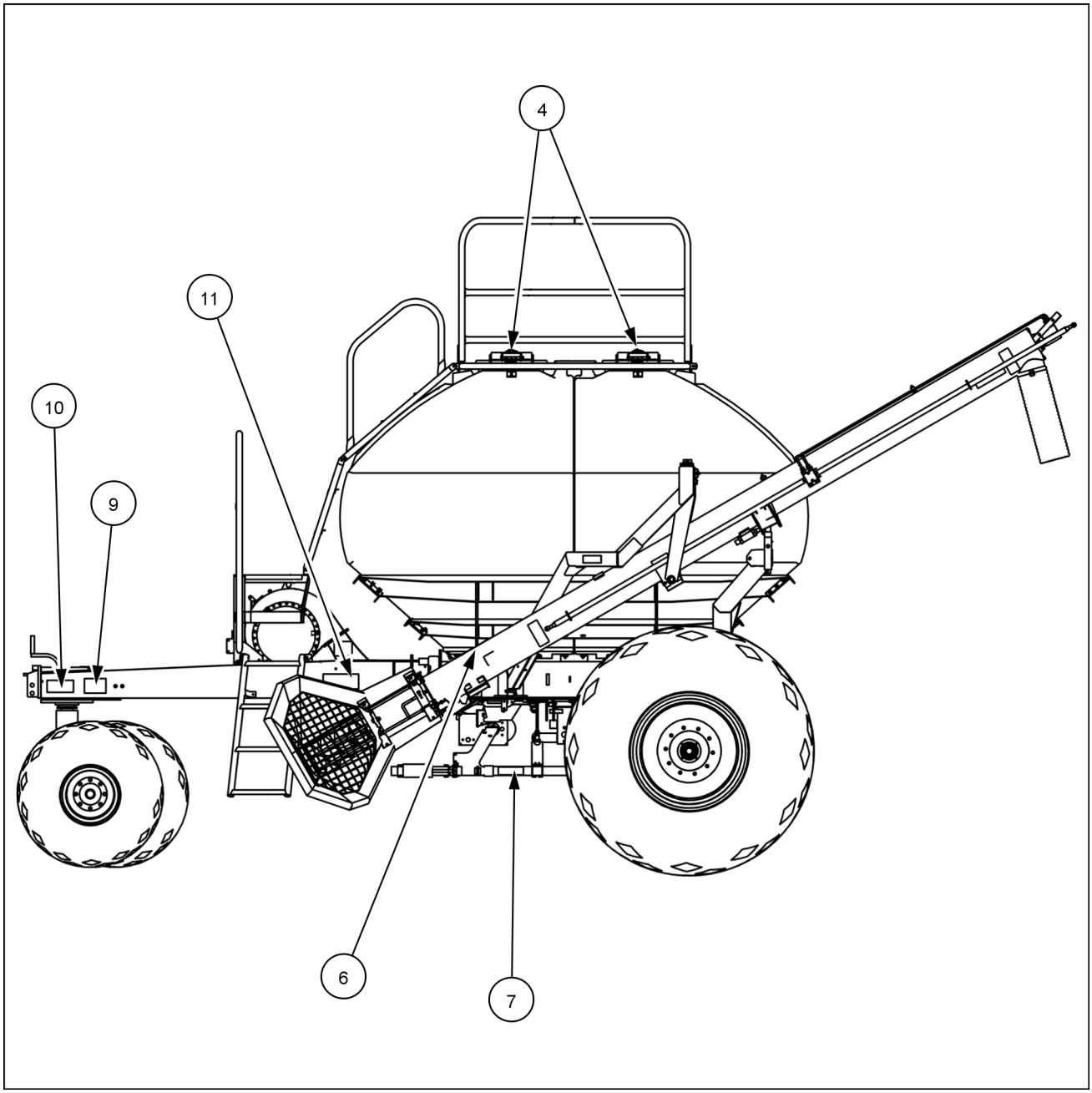

SAIL14SE00066HA 2

Safety decal locations - Tow behind air cart - left side

Tow behind air cart - three tank

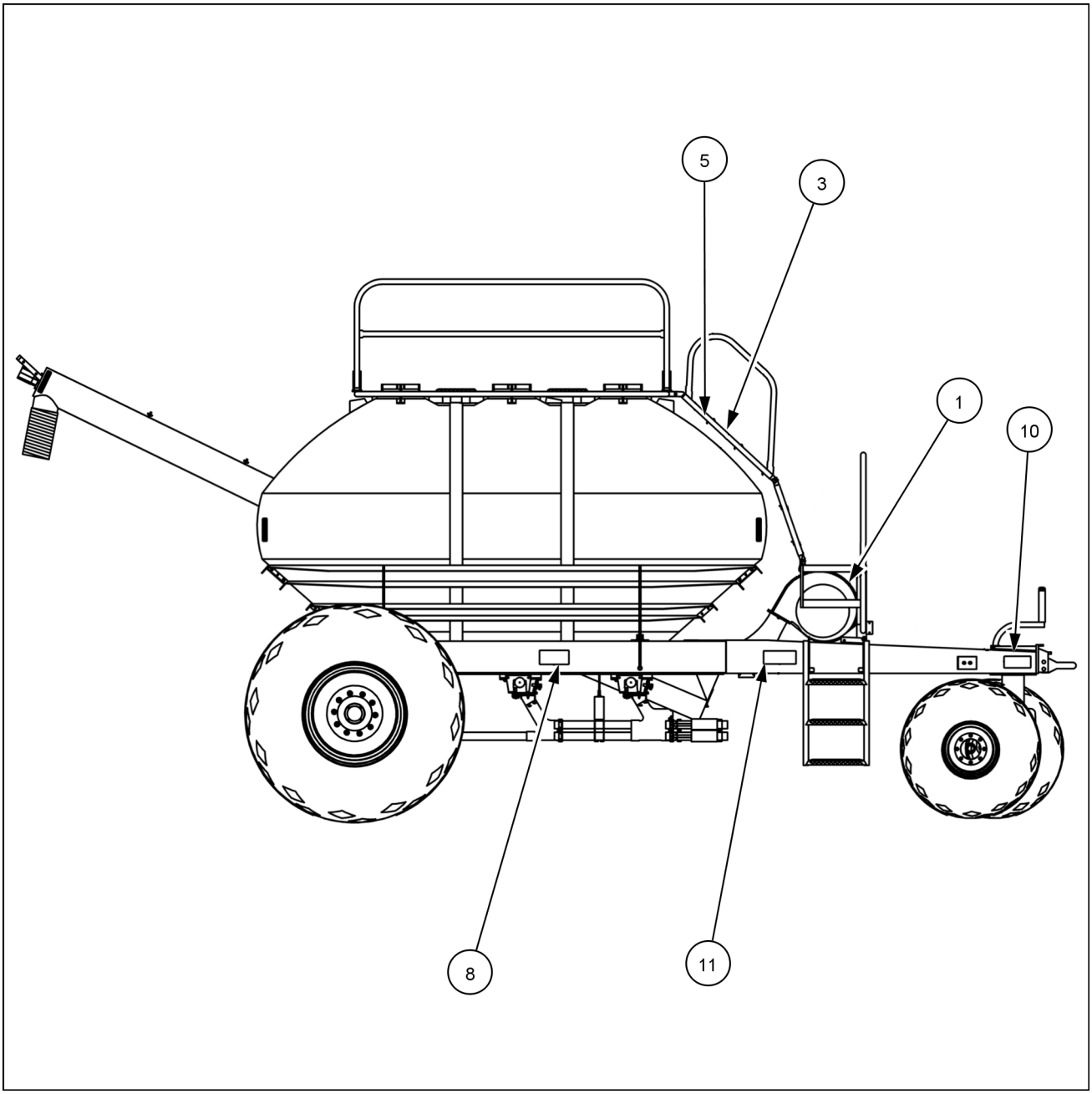

SAIL14SE00067HA 3

Safety decal locations - Tow behind air cart - right side

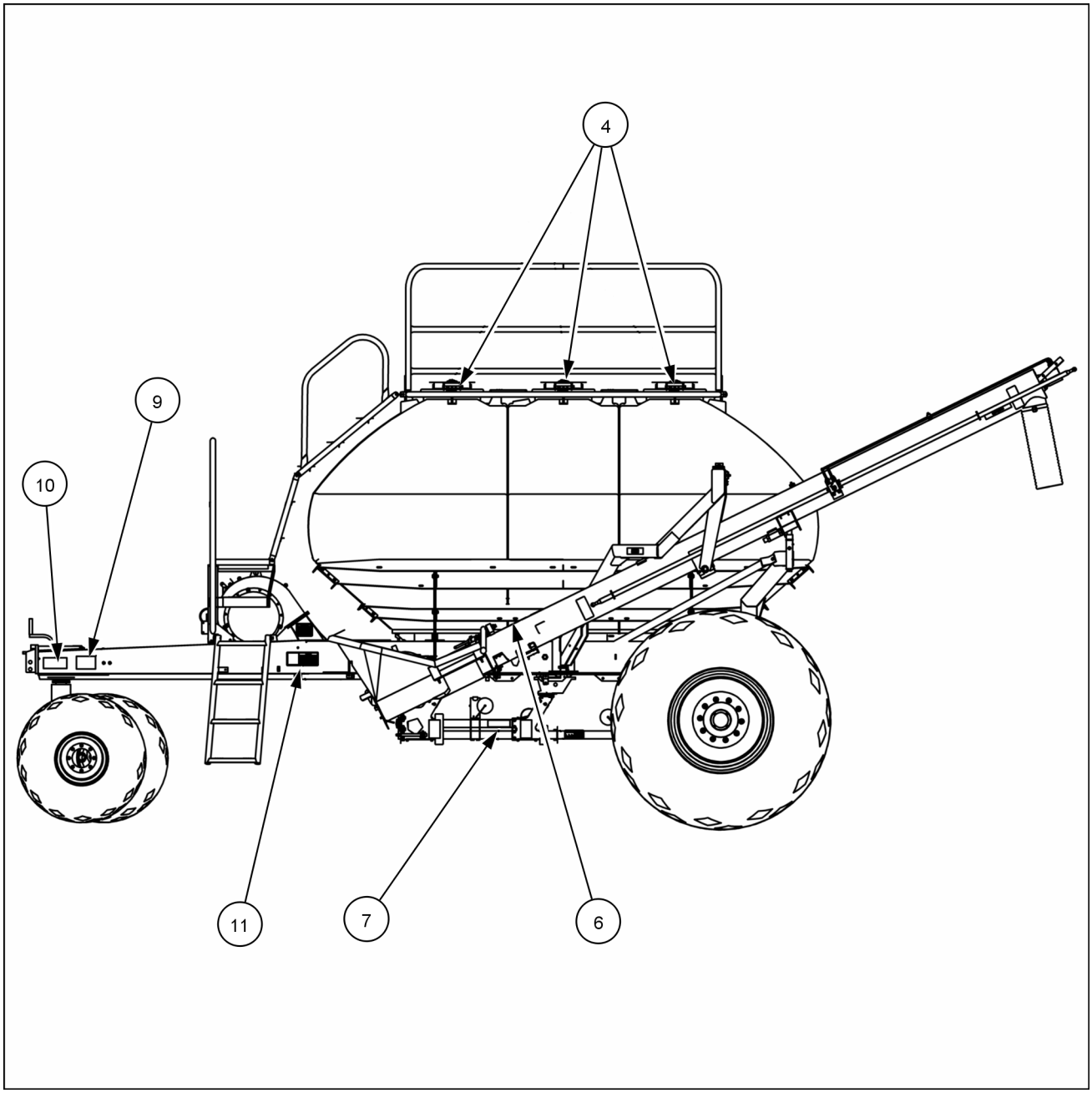

SAIL14SE00068HA 4

Safety decal locations - tow behind air cart - left side

Tow between air cart - two tank

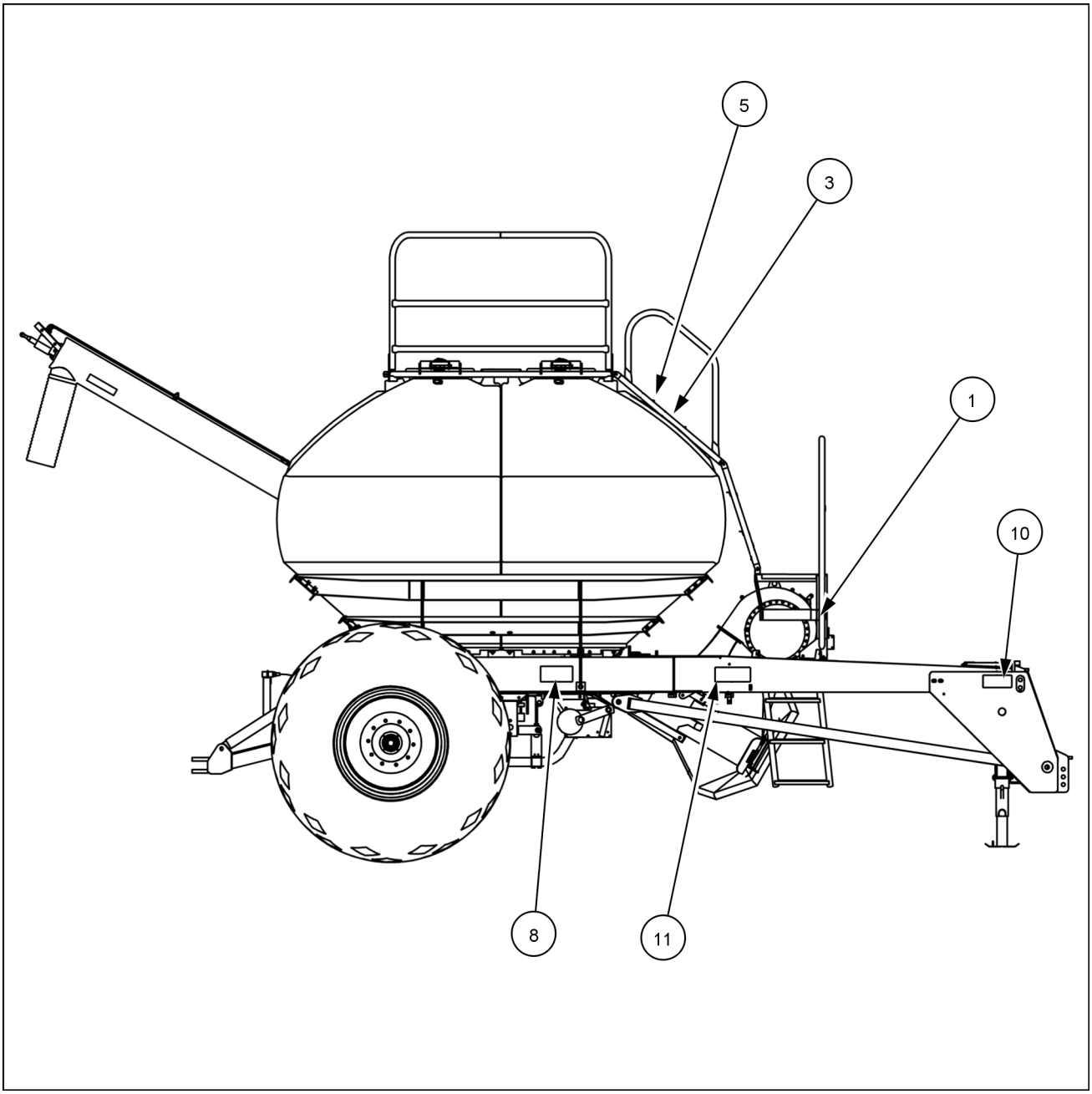

SAIL14SE00069HA 5

Safety decal locations - tow between air cart - right side

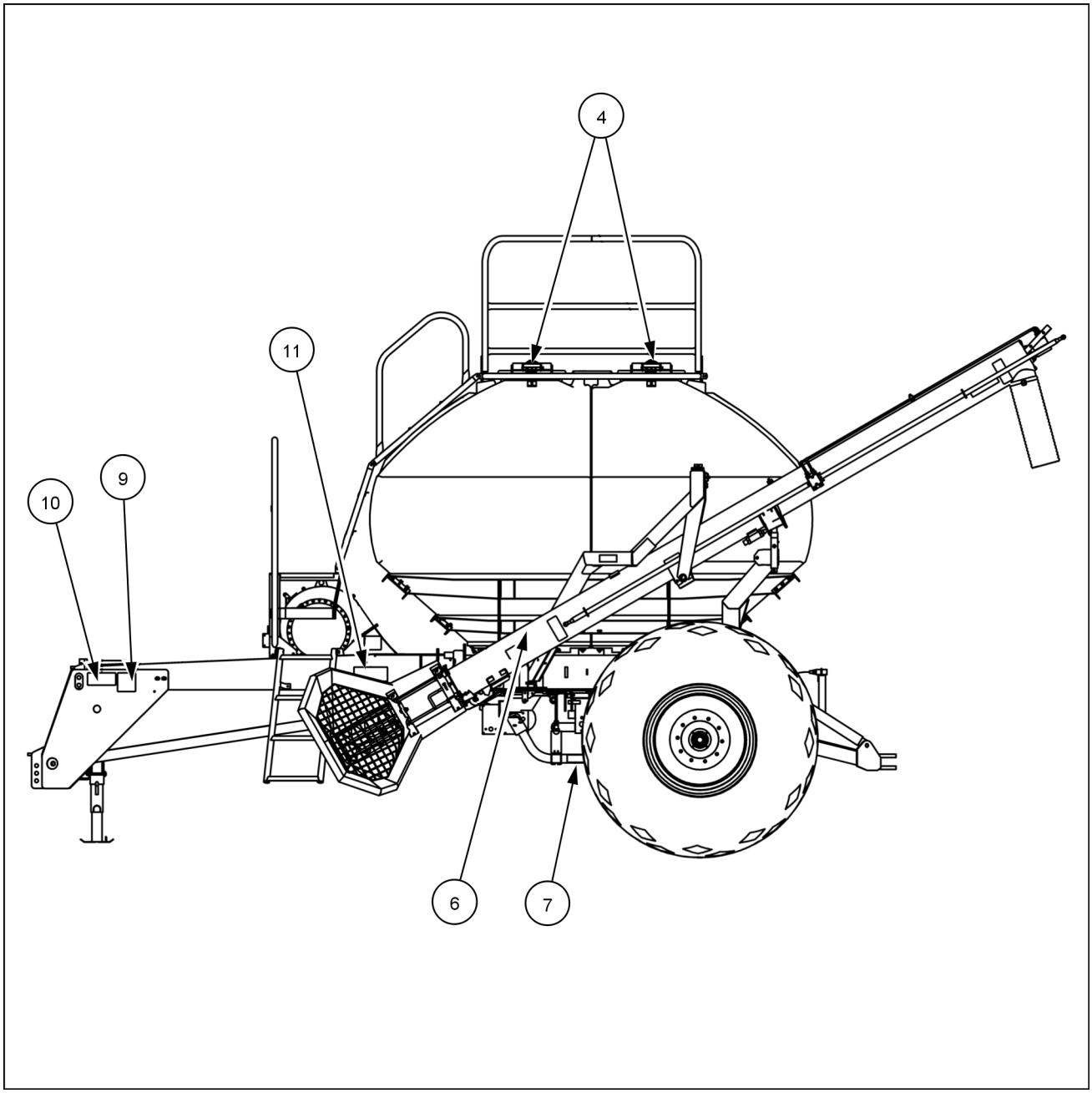

SAIL14SE00070HA 6

Safety decal locations - tow between air cart - left side

Tow between air cart - three tank

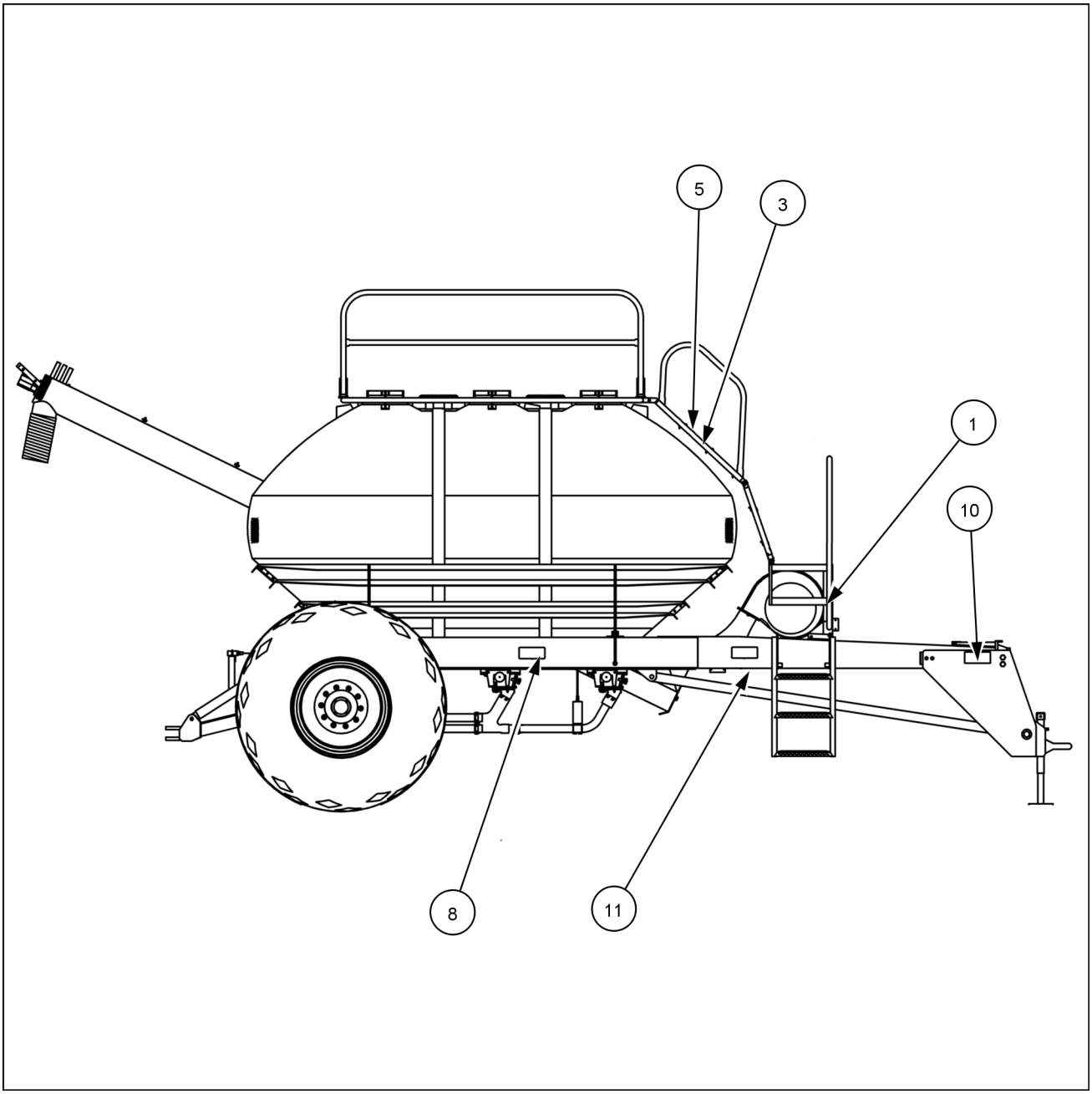

SAIL14SE00071HA 7

Safety decal locations - tow between air cart - right side

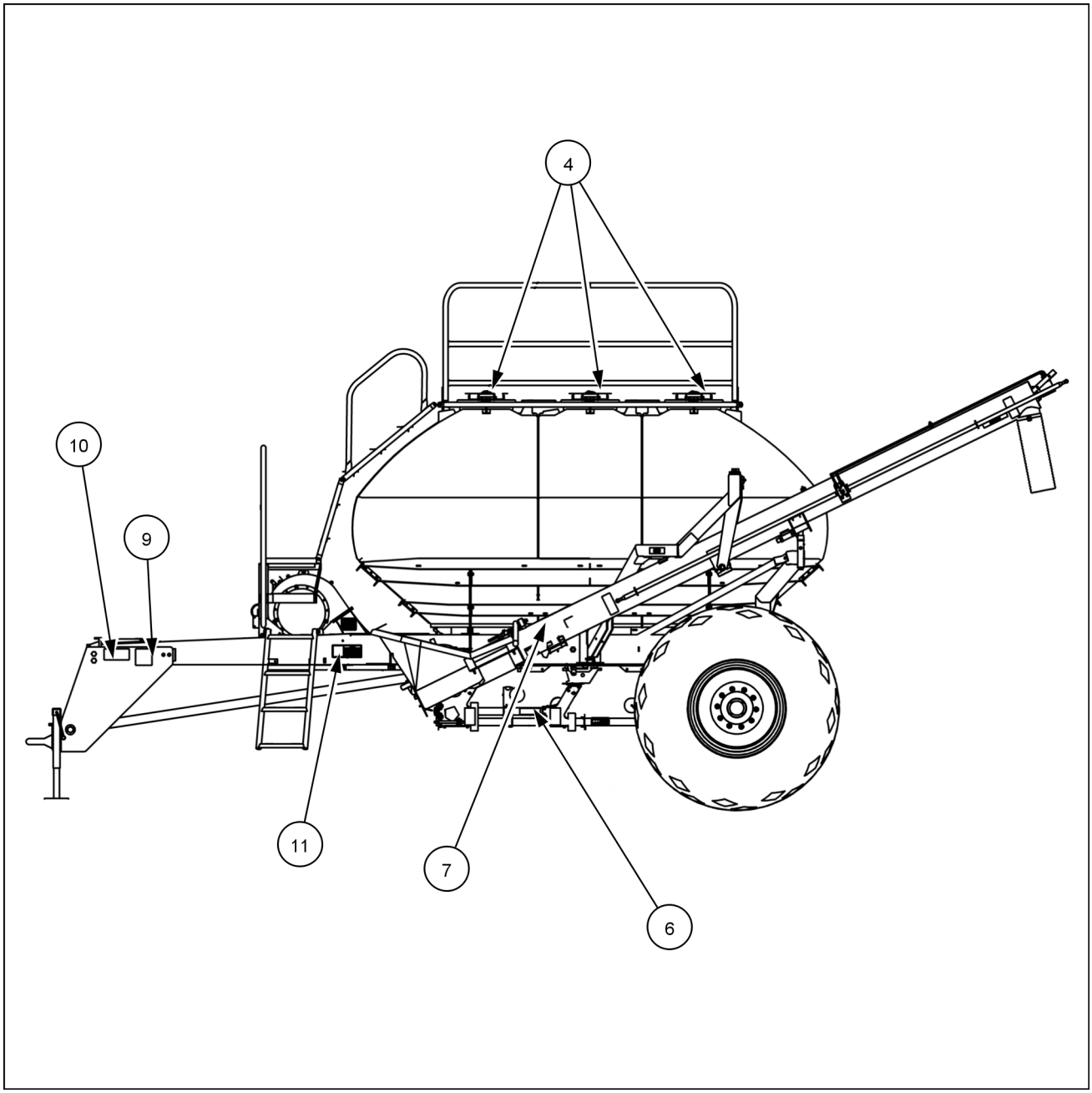

SAIL14SE00072HA 8

Safety decal locations - Tow between air cart - left side

(1) located on fan shield

DANGER
1. Stop engine and remove key before removing fan shield.
2. Do not operate fan with shield removed.
Failure to comply will result in death or serious injury.
Quantity: 1
English: GD-500.73
Russian: GD-500.73RU
French Canadian: 425205A1

GD50073 9

On fan shield **(1)** (variable drive shown).

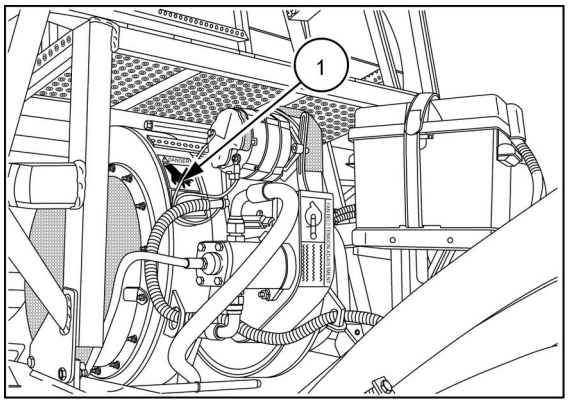

111082S 10

(3) located on decal plate at the top of the ladder and on each tank lid.

WARNING
Stop fan before opening lid.
Avoid exposure to airborne chemicals.
Dust and fumes will be exhausted if tank lid is opened while tank is pressurized.
Chemicals may cause eye, skin, or breathing problems.
Wear face mask, gloves, and goggles.
Read and follow safety instructions on chemical supplier's label.
Failure to comply could result in death or serious injury.
Quantity: 3 (two tank carts) / 4 (three tank carts)
English: GD-500.79
Russian: GD-500.79RU
French Canadian: 425208A1

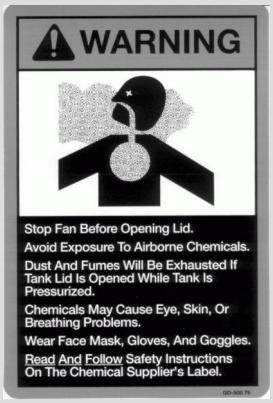

GD50079 11

On decal plate at top of ladder **(3)**.

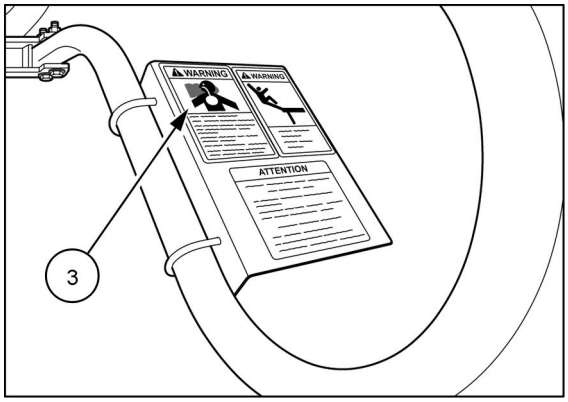

111070S 12

On each tank lid **(3)**.

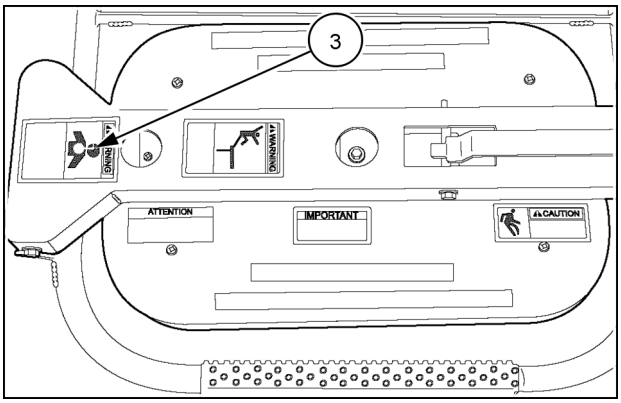

100124S 13

(4) located on each tank lid.

CAUTION
Lid raises automatically when unlatched.
Failure to comply could result in minor or moderate injury.
Quantity: 2 (two tank carts) / 3 (three tank carts)
English: GL-700.20
Russian: GL-700.20RU
French Canadian: 425235A1

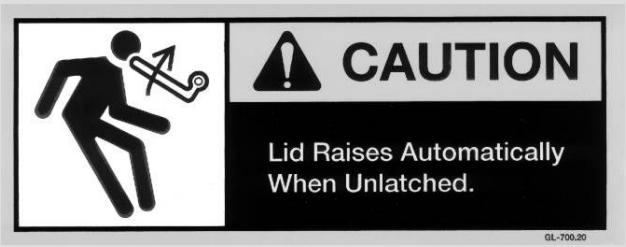

GL70020 14

On each tank lid **(4)**.

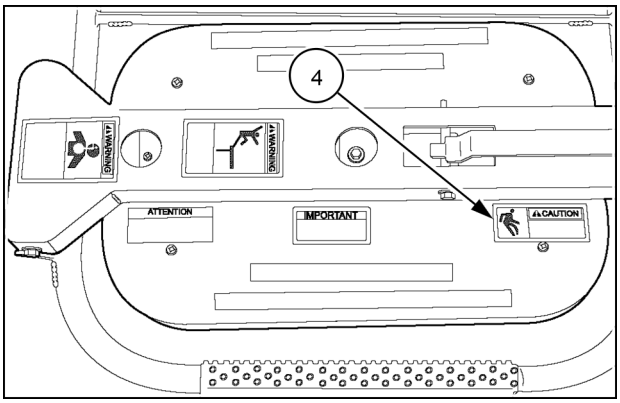

100124S 15

(5) located on each tank lid and on the decal plate at the top of the ladder.

WARNING
1. Do not ride on machine.
2. Do not stand on tank.
Failure to comply could result in death or serious injury.
Quantity: 3 (two tank carts) / 4 (three tank carts)
English: GD-500.71
Russian: GD-500.71RU
French Canadian: 425203A1

GD50071 16

On decal plate at top of ladder **(5)**.

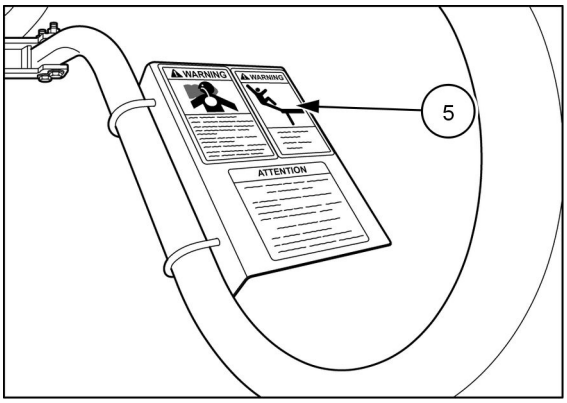

111070S 17

On each tank lid **(5)**.

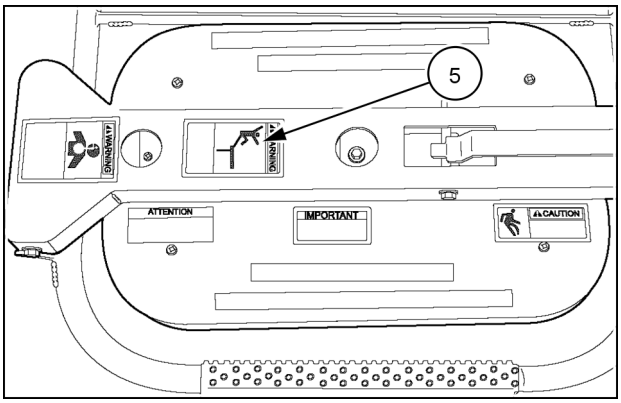

100124S 18

Product: FLEXI COIL 1740/2340/2850/3350/3850/4350 Air Cart Service Repair Manual
Full Download: https://www.arepairmanual.com/downloads/flexi-coil-1740-2340-2850-3350-3850-4350-air-cart-service-repair-manual/

(6) located on the auger flighting.

DANGER
1. Stay away from intake end. Keep others away.
2. Keep all shields in place.
3. Keep hands, feet, hair and clothing away from flighting.
Failure to comply will result in death or serious injury.
Quantity: 1
English: GD-500.80
Russian: GD-500.80RU
French Canadian: 425209A1

GD50080 19

On top of the auger **(6)** (standard auger shown).

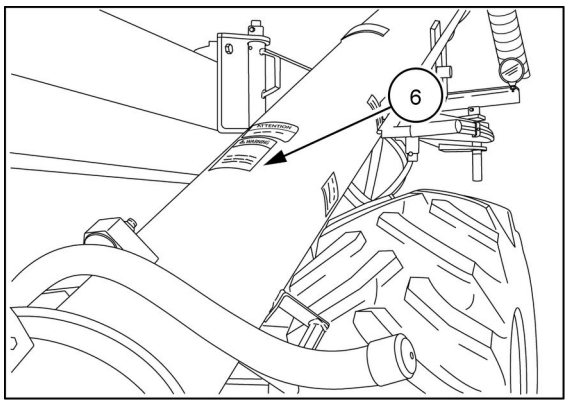

111072S 20

Sample of manual. Download All 1290 pages at:
https://www.arepairmanual.com/downloads/flexi-coil-1740-2340-2850-3350-3850-4350-air-cart-service-repair-manual/