Product: Fiatallis FW110/FW130 Wheel Loader Service Repair Manual
Full Download: https://www.arepairmanual.com/downloads/fiatallis-fw110-fw130-wheel-loader-service-repair-manual/

FIATALLIS®

FW110
FW130

WHEEL LOADERS

SERVICE MANUAL

60402223
ISSUE 1

Sample of manual. Download All 355 pages at:
https://www.arepairmanual.com/downloads/fiatallis-fw110-fw130-wheel-loader-service-repair-manual/

Product: Fiatallis FW110/FW130 Wheel Loader Service Repair Manual
Full Download: https://www.arepairmanual.com/downloads/fiatallis-fw110-fw130-wheel-loader-service-repair-manual/

FW110, FW130

WHEEL LOADER

Service Manual

Print N° 604.02.223 English

NOTE: References to W110 and W130 within this manual pertain to FW110 and FW130 respectively.

THIS ALERT SYMBOL SIGNALS IMPORTANT MESSAGES INVOLVING YOUR SAFETY.

Read and heed carefully the safety instructions listed and follow the precautions recommended to avoid potential risks and to safeguard your health and your safety.

You will find this symbol in the text of this Manual referred to the following key words:

WARNING **- Cautions directed to avoid improper repair interventions involving potential consequences for the operator's safety.**

DANGER **- These warnings qualify specifically potential dangers for the safety of the operator or other persons directly or indirectly involved.**

IMPORTANT NOTICE

All maintenance and repair interventions explained in this Manual **must be performed exclusively by the Service Organization of the Manufacturer,** observing strictly the instructions explained using, whenever necessary, the recommended specific tools.
Whoever performs the operations reported without following exactly the precautions is responsible on his own, for the damages that may result.

Neither the Factory nor any Organizations in its Distribution Network, including but not limited to national, regional or local distributors, are responsible for any liability arising from any damage resulting from defects caused by parts and/or components not approved by the Factory for use in maintaining and/or repairing products manufactured or merchandized by the Factory.
In any case, no warranty of any kind is made or shall be imposed with respect to products manufactured or merchandized by the Factory, when failures are caused by the use of parts and/or components not approved by the Factory.

Sample of manual. Download All 355 pages at:
https://www.arepairmanual.com/downloads/fiatallis-fw110-fw130-wheel-loader-service-repair-manual/

AVOID ACCIDENTS

Most accidents and injuries occurring in industry, on the farm, at home or on the road, are caused by the failure of some individual to follow simple and fundamental safety rules or precautions. For this reason, MOST ACCIDENTS CAN BE PREVENTED by recognizing the real cause and taking the necessary precautions, before the accident occurs.

Regardless of the care used in design and construction of any type of equipment, there may be conditions that cannot be completely safeguarded against without interfering with reasonable accessibility and efficient operation.

A careful operator is the best insurance against accidents. The complete observance of one simple rule would prevent many thousands serious injuries each year.

This rule is: Never attempt to clean, lubricate or adjust a machine while it is in motion.

WARNING

On machines having hydraulically, mechanically and/or cable controlled equipment (such as showels, loaders, dozers, scrapers etc.) be certain the equipment is lowered to the ground before servicing, adjusting and/or repairing.

If it is necessary to have the equipment partially or fully raised to gain access to certain items, be sure the equipment is suitably supported by means other than the hydraulic lift cylinders, cable and/or mechanical device used for controlling the equipment.

SUMMARY

SPECIFICATIONS ..... pag. 1

CAPACITIES AND FLUID TYPES ..... pag. 5

SAFETY RULES ..... pag. 6

UNITS OF MEASURE USED IN THE MANUAL ..... pag. 13

TIGHTENING TOR QUES ..... pag. 14

ENGINE ..... Section 1

DRIVE LINE/TRANSMISSION ..... Section 2

BREAKING SYSTE ..... Section 3

STEERING SYSTEM ..... Section 4

BUCKET BOOM AND FRAME ..... Section 5

ATTACHMENT HYDRAULIC SYSTEM ..... Section 6

ELECTRICAL SYSTEM ..... Section 7

CAB ..... Section 8

SPECIFICATIONS - WHEEL LOADER W110

IDENTIFICATION - 2621.100.001

MARKING: W110

ENGINE

Net power at the flywheel ..... 83 KW
Maximum torque speed ..... 1500 rpm
Maximum power speed ..... 2300 rpm
Make and model ..... Fiat 8065.25.290
Diesel type, 4 stroke, direct injection, turbocharged
Number of cylinders 6
Bore x stroke ..... 104 x 115 mm
Total displacement ..... 5861 cm^3
Injector setting ..... 260 + 12 bar
Valve/rocker operation lash:
- intake 0.30
- exhaust 0.30

Firing order 1-5-3-6-2-4

ENGINE SPEEDS

Minimum idle speed (no load) ..... 790 ÷ 870 rpm
Maximum idle speed (no load) .... 2430 ÷ 2530 rpm
Converter stall speed ..... 2310 ÷ 2410 rpm
Steering stall at idle speed > 600 rpm
Attachment stall ..... 2300 ÷ 2400 rpm
Full stal ..... 1510 ÷ 1710 rpm
Minimum starting temperature: ..... - 15°C
Engine coolant high temperature sender setting ..... 101 ± 1°C
Engine oil low pressure switch setting ..... 0.5 ± 0.1 bar

TORQUE CONVERTER

Type ..... single-stage, single-phase
Main convertor pressure ..... 5 bar
Convertor safety valve pressure ..... 8.5 bar

TRANSMISSION

Maximum ground speeds (forward/reverse) in kph (with 17.5 R25 tyres):

Forward speed	Kph	Reverse speed	Kph
1st	7.67	1st	8.30
2nd	13.22	2nd	14.26
3rd	21.87	3rd	23.48
4th	35.70	4th	38.00

Oil pump flow rate (at 2100 rpm) ..... lt/min
Main pressure on the control valve ..... 20 ÷ 24 bar
Transmission disengagement sensor ..... 15 ± 1 bar
Transmission induction sensors to gear teeth adjust clearance ..... 0.5 ÷ 0.8 mm
Transmission oil high temperature sensor setting .. .. 122 ± 3°C

AXLES

Axles complete with disc brakes in oil bath.
Self-locking differentials.
Planetary final drives.
Stiff front axle, support structure type
- reduction ratio ..... 1 : 23.258

Oscillating rear axle, support structure type
- reduction ratio ..... 1 : 23.258

TYRES

Type ..... tubeless
Radial type ..... MICHELIN 17.5 R25 XTLA
Inflating pressure
- Work: front = 3
  rear = 1.5 bar
- Transfer: front = 2
  rear = 2 bar

Wheel tightening torque ..... 86 daNm

BRAKES

Delivery, brakes pump at nominal speed .... 26 lt/min
Accumulator recharge start pressure ..... 80 bar
Accumulator recharge end pressure ... 95 ÷105 bar
Accumulator pre-charge pressure (0.75 lt) ... 47 bar
Transmission disengagement pressure switch setting ..... 15 ± 1 bar
Brake oil low presssure sensor setting ... 60 ± 5 bar
Brake lights pressure switch setting ... 1.8 ± 0.5 bar
Parking brake applied pressure switch setting .....
ON 8 bar - OFF 12 bar

STEERING SYSTEM

Cylinders ..... 2 double-acting
- bore x stroke ..... 60 x 395 mm

Stand-by/main priority valve setting ..... 12 bar

ATTACHMENT HYDRAULIC SYSTEM

Sealed type with anti-cavitation and safety valves.
- Flow at rated speed ..... 165 lt/min

2 or 3 spool control valve
Mechanical or piloted control
Hydraulic double-acting cylinders:
- Boom control 2
- Bore x stroke ..... 110 x 681 mm

- Bucket control cylinder
- Bore x stroke ..... 130 x 431 mm
- Pressure relief valve setting ..... 210 ± 5 bar
- Lift safety valve setting ....230 ± 5 bar
- Bucket roll-back safety valve setting ....230 ± 5 bar
- Bucket roll-out safety valve setting ....120 ± 5 bar

OPTIONS

Electronic anti-pitch LTS (Load Travel Stabiliser) system.

Three-position control switch as follows:
Position 0: disengaged
Position 1: LTS engaged with speeds exceeding 5 kph
Position 2: (to be used only for maintenance or repair) LTS engaged at all times, even with speed lower than 5 kph.
- Accumulator safety valve setting ..... 120 bar

ELECTRICAL SYSTEM

Operating voltage ..... 24 V
Batteries in series 2
- maintenance -free type

BOSCH starter motor
Rated power ..... 4 KW
BOSCH alternator with voltage regulator ..... 55 A

WEIGHT

Loader weight with 17.5 R25 tyres, 1.6 m³ bucket, fully filled with fluids and operator 9200 kg.

MAIN DIMENSIONS

Dimensions taken with machine with the loader fitted with 17.5 R25 tyres and 1.6 load capacity bucket.

Unit of measure: mm

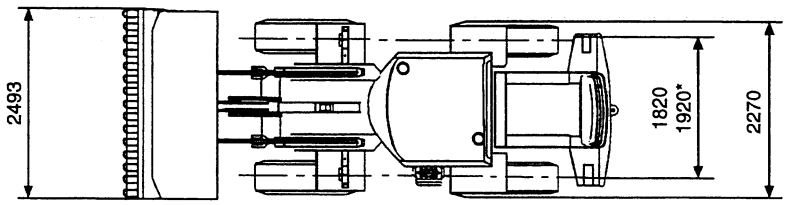

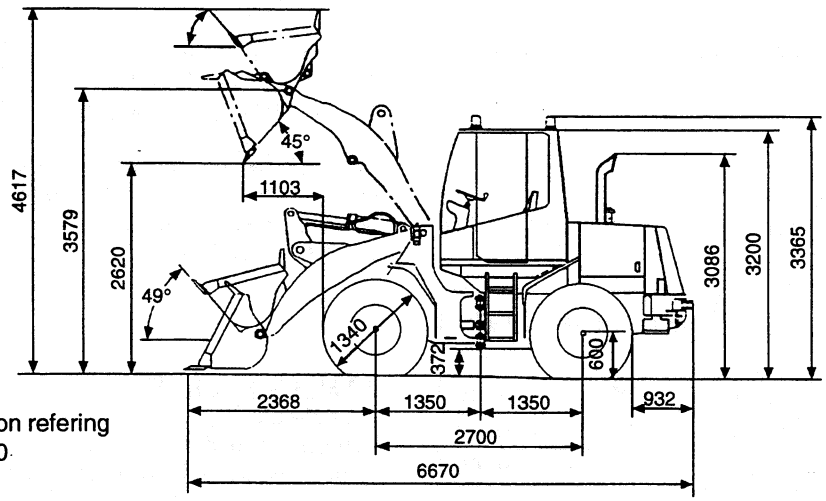

* Dimension refering to 555/70

SPECIFICATIONS - WHEEL LOADER W130

IDENTIFICATION - 2621.200.001

MARKING: W130

ENGINE

Net power at the flywheel ..... 94.7 KW
Maximum torque speed ..... 1400 rpm
Maximum power speed ..... 2200 rpm
Make and model ..... Fiat 8065.25.291
Diesel type, 4 stroke, direct injection, turbocharged
Number of cylinders 6
Bore x stroke ..... 104 x 115 mm
Total displacement ..... 5861 cm^3
Injector setting ..... 260 + 12 bar
Valve/rocker operation lash:
- intake 0.30
- exhaust 0.30

Firing order .....

ENGINE SPEEDS

Minimum idle speed (no load) ..... 785 ÷ 865 rpm
Maximum idle speed (no load) .... 2350 ÷ 2450 rpm
Converter stall speed ..... 2100 ÷ 2200 rpm
Steering stall at idle speed > 600 rpm
Attachment stall ..... 2240 ÷ 2340 rpm
Full stal ..... 1470 ÷ 1670 rpm
Minimum starting temperature: ..... - 15°C
Engine coolant high temperature sender setting ..... 101 ± 1°C
Engine oil low pressure switch setting ..... 0.5 ± 0.1 bar

TORQUE CONVERTER

Type ..... single-stage, single-phase
Main convertor pressure ..... 5 bar
Convertor safety valve pressure ..... 8.5 bar

TRANSMISSION

Maximum ground speeds (forward/reverse) in kph (with 17.5 R25 tyres):

Forward speed	Kph	Reverse speed	Kph
1st	7.72	1st	8.38
2nd	13.58	2nd	14.74
3rd	22.24	3rd	24.14
4th	39.12	4th	42.76

Oil pump flow rate (at 2100 rpm) ..... 74 lt/min
Main pressure on the control valve ..... 20 ÷ 24 bar
Transmission disengagement sensor ..... 15 ± 1 bar
Transmission induction sensors to gear teeth adjust clearance ..... 0.5 ÷ 0.8 mm
Transmission oil high temperature sensor setting .. .. 122 ± 3°C

AXLES

Axles complete with disc brakes in oil bath.
Self-locking differentials.
Planetary final drives.
Stiff front axle, support structure type
- reduction ratio ..... 1 :

Oscillating rear axle, support structure type
- reduction ratio ..... 1 :

TYRES

Type ..... tubeless
Radial type ..... MICHELIN 17.5 R25 XTLA
Inflating pressure
- Work: front = 3.5
  rear = 1.5 bar
- Transfer: front = 2
  rear = 2 bar

Wheel tightening torque ..... 86 daNm

BRAKES

Delivery, brakes pump at nominal speed .... 26 lt/min
Accumulator recharge start pressure ..... 80 bar
Accumulator recharge end pressure ... 95 ÷105 bar
Accumulator pre-charge pressure (0.75 lt) ... 47 bar
Transmission disengagement pressure switch setting ..... 15 ± 1 bar
Brake oil low presssure sensor setting ... 60 ± 5 bar
Brake lights pressure switch setting ... 1.8 ± 0.5 bar
Parking brake applied pressure switch setting .....
ON 8 bar - OFF 12 bar

STEERING SYSTEM

Cylinders ..... 2 double-acting
- bore x stroke ..... 60 x 395 mm

Stand-by/main priority valve setting ..... 12 bar

ATTACHMENT HYDRAULIC SYSTEM

Sealed type with anti-cavitation and safety valves.
- Flow at rated speed ..... 165 lt/min

2 or 3 spool control valve
Mechanical or piloted control
Hydraulic double-acting cylinders:
- Boom control 2
- Bore x stroke ..... 120 x 665 mm

- Bucket control cylinder
- Bore x stroke ..... 150 x 431 mm
- Pressure relief valve setting ..... 210 ± 5 bar
- Lift safety valve setting ....230 ± 5 bar
- Bucket roll-back safety valve setting .... 230 ± 5 bar
- Bucket roll-out safety valve setting .... 120 ± 5 bar

Three-position control switch as follows:
Position 0: disengaged
Position 1: LTS engaged with speeds exceeding 5 kph
Position 2: (to be used only for maintenance or repair) LTS engaged at all times, even with speed lower than 5 kph.
- Accumulator safety valve setting ..... 120 bar

ELECTRICAL SYSTEM

Operating voltage ..... 24 V
Batteries in series 2
- maintenance -free type

BOSCH starter motor
Rated power ..... 4 KW
BOSCH alternator with voltage regulator ..... 55 A

OPTIONS

Electronic anti-pitch LTS (Load Travel Stabiliser) system.

WEIGHT

Loader weight with 17.5 R25 tyres, 1.9 m³ bucket, fully filled with fluids and operator kg.

MAIN DIMENSIONS

Dimensions taken with machine with the loader fitted with 17.5 R25 tyres and 1.9 load capacity bucket.

Unit of measure: mm

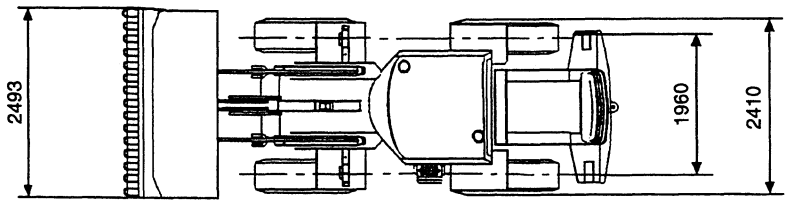

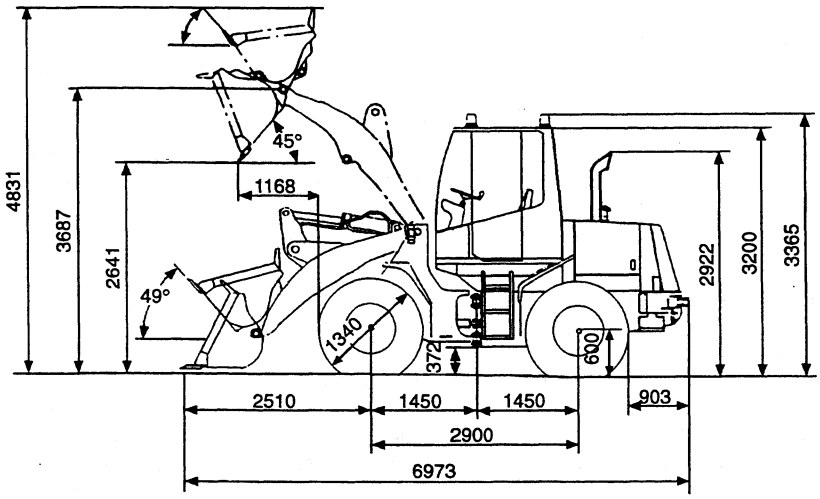

FLUIDS AND CAPACITY TABLE

Component to be filled	Fluid	Capacity (lts)		Fluids and lubriants Ambra	International Specification
		W110	W130		
Engine	Oil	13.2	13.2	AMBRA - Super Gold 500	CCMCD5, QFH 586 EN
Cooling system	Radiator fluid	28	28	AMBRA - Agriflu	NH 900 A
Transmission	Oil	20	20	AMBRA - Super Gold 10W-30	CCMCD4 - NH 324 G
Hydraulic and brake syst.	Hydraulic and brake oils	80	80	AMBRA - Hi Tech 46	ISO VG46, DIN 51524 Part 1 and 2, QFH583/HD
Axles	Front axle oil	18	21	AMBRA TX Fluid	SAE 80W-90, QFH584 TR
	Rear axle oil	26	29		
Lubrication of pivot points	Grease			AMBRA - MG2	QFH585GR

SAFETY RULES

GENERALITIES

Read this Manual carefully before starting, operating, maintaining, fuelling or servicing the machine.

Read and comply with all safety precautions before any intervention.

Do not allow unauthorised personnel to operate or service this machine.

Do not wear rings, wrist watches, jewellery, loose or hanging garments, such as ties, torn clothing, scarves, unbuttoned or unzipped jackets that can get caught in moving parts. Wear certified safety clothes such as: hard hat, no-slip footwear, heavy gloves, ear protection, safety glasses, reflector vests, respirators. Ask your employer about specific safety equipment requirements.

Keep the operator's compartment, step plates, grab-rails and handles clean and clear of foreign objects, oil, grease, mud or snow to minimize the danger of slipping or stumbling. Remove mud or grease from your shoes before attempting to mount or operate the machine.

Do not jump on or off the machine. Always keep both hands and one foot, or both feet and one hand in contact with steps and grab rails.

Do not use controls or hoses as hand holds when climbing on or off the machine. Hoses and controls are movable parts and do not provide solid support. Besides, controls may be inadvertently moved and cause unexpected movement of the machine or its attachments.

Never operate the machine or its attachments from any position other than sitting in the driver's seat.

Keep head, body, limbs, hands and feet inside the operator's compartment at all times to reduce exposure to external hazards .

Be careful of possible slippery conditions of the steps and hand rails as well as of the ground around the machine.

Do not leave the machine until it is has come to a complete stop.

Check the seat safety belt at least twice per year and replace it if it shows signs of wear, fraying or other weakness that could lead to failure.

STARTING

NEVER START OR OPERATE A FAILED MACHINE. Before operating the machine, always ensure that any unsafe condition has been satisfactorily corrected.

Check brakes, steering and attachment controls before moving off. Report any malfuctioning part or system to the maintenance managers for proper action.

Ensure all protective guards and panels as well as all safety devices provided are in place and in good operating condition.

Ensure that nobody is in the machine operating range before moving off or operating the attachment. WALK COMPLETELY AROUND the machine before mounting. Sound the horn.

Before starting machine, check, adjust and lock the driver's seat for maximum comfort and control of the machine.

Fasten your seat belts(when fitted).

Obey all flag signals and signs.

Due to the presence of flammable fluids on the machine, never check or fill fuel tanks or accumulator batteries near fires, open flames, or sparks.

REMEMBER THAT SPECIAL STARTING FLUIDS ARE FLAMMABLE. Scrupolously follow recommendations printed on the containers and in this Manual.

DO NOT PUNCTURE OR BURN CONTAINERS.

Containers must be stored in fresh, well ventilated places and out of the reach of unauthorised persons. Strictly follow the instructions provided by the Manufacturer.

Never use these products near fires, open flames, or sparks.

OPERATING

Check wheel and rim retainers before each working shift. If necessary, tighten to the torque specified.

Do not run the engine of this machine in closed buildings without proper ventilation capable to remove harmful exhaust gases.

Roll Over Protective Structures (ROPS) are required on wheel or crawler loaders, dozers, or graders. NEVER OPERATE the machine if such protective structure is removed.

Keep the operator's compartment free of foreign objects, especially if not firmly secured. Never use the machine to transport objects, unless proper securing points are provided.

DO NOT CARRY RIDERS ON THE MACHINE

Study and familiarize with escape routes alternate to normal exit routes.

According to law provisions, seat belts must be fitted with Roll Over Protection Structures or cabs. Keep safety belts fastened during operation.

For your personal safety, do not climb on or off the machine while it is in motion.

Make sure that bystanders are clear of the machine operating range before starting the engine and operating the attachment. Sound the horn. Obey all indications provided by flags, signs and signals.

DO NOT COAST OR FREEWHEEL down hills. Engage the most suitable gear speed to keep the machine under control.

SAFETY RULES

Do not operate the machine if you are extremely tired or feel ill. Be especially careful towards the end of the working shift.

Do not operate a machine with misadjusted brakes.

Operate the machine at low speed which can ensure complete control at all times.

Travel slowly over very rough terrain, slopes or near drop-offs, in congested areas or on frozen or slippery surfaces.

When backing, always look to where the machine is to be moved. Be alert of the position of bystanders. Should someone enter the work area, STOP THE MACHINE.

Maintain a safe distance from other machines or obstacles to ensure required visibility conditions. Give way to loaded machines.

Maintain a clear vision of the surroundings of the travel or work area at all times. Keep cab windows clean and repaired.

When machines are operating in tandem, the pusher (rear) must be equipped with the appropriate deflectors to protect the front unit driver against the air stream coming from the blower fan.

When pulling or towing through a cable or chain, do not start suddenly at full throttle. Take-up slack carefully.

Carefuly inspect the towing items for flaws or problems before proceedig.

Avoid kinking or twisting chains or cables. Do not pull through a kinked chain or cable as the high stresses existing in this condition may induce failures. Always wear heavy gloves when handling chains or cables.

Chains and cables should be securely anchored. Anchor points should be strong enough to withstand the expected load. Keep anyone clear of anchor points and cables or chains.

DO NOT PULL UNLESS THE OPERATOR'S COMPARTMENTS OF THE MACHINES INVOLVED ARE PROPERLY PROTECTED AGAINST POSSIBLE BACKLAS IN CASE OF CABLE OR CHAIN FAILURE OR DETACHMENT.

Be alert of soft ground conditions close to newly constructed walls. The fill material and machine weight may cause the wall to collapse.

In darkness, check area of operation carefully before moving in with the machine. Use all lights provided. Do not move into low visibility areas.

If the engine tends to stall for whatever reason under load or at idle, immediately report this problem to the maintenance managers for proper action. Do not operate the machine until this condition has been corrected.

On machines fitted with suction radiator fans, regularly check the engine exhaust system for leaks, as exhaust fumes expelled towards the operator are toxic.

Operators must know thoroughly the performances of the machine they are driving. When working on slopes or near sudden level drops in the terrain, avoid areas where ground is loose or soft since overturn or loss of machine control could result.

If noise level is high and continuosly exceeds 90 dBA over 8 hours at the operator's ear, wear approved ear protection in compliance with local regulations.

Where counterweights are provided, do not operate the machine if they have been removed.

When transporting a loaded bucket, keept it as rolled-back and low as possible for maximum visibility, stability and safety of there machine. Ground speed should be adequate to the load and ground conditions.

The load must always be properly arranged in the bucket; move with extreme care when transporting oversize loads.

Use only the type of bucket recommended for the machine and the materials to be handled. Follow the recommendations concerning loading capacity, arrangement of the materials, characteristics of the ground and job to be performed.

Do not lift and move loads overhead where persons are standing or working, nor downhill when working crosswise on slopes. In this case, the bucket should be unloaded on the uphill side, whenever possible.

Start and stop the machine carefully when the bucket is full. Do not move off without first reducing engine speed.

Overtaking manoeuvres should be performed only when absolutely necessary and unavoidable. Beware possible uneven terrains, poor visibility, presence of other machinery or persons out of sight.

Operate the machine at a speed adequate to the working site conditions and in any case slow enough to ensure complete control at all times.

Check instruments at start-up and frequently during operation. Stop the machine immediately should any malfunction be signalled.

Never use the bucket as a man lift or to carry riders.

Never use the machine as a work platform or scaffolding, nor for other improper use (such as pushing railway cars, trucks or other machines).

Pay attetion to people within the machine operating range. Load trucks from the driver's side whenever possible.

Prior to operating the machine, check which obstacles and/or difficulties you will encounter, such as narrow streets, overhead doors, cables, piping, as well as ground, bridges, paving and ramps bearing load limitations.

In case of road transfers, find out beforehand what conditions are likely to be encountered, such as size restrictions, heavy traffic, paving type, etc. . Beware fog, smoke or dust that obscure visibility.

When crossing gullies or ditches, move at an angle with reduced speed after ensuring ground conditions will permit a safe traverse.

Always inspect the working area to identify potential risks

such as: inclines, overhangs, trees, demolition rubble, fires, ravines, steep slopes, rough terrain, ditches, crowns, ridge trenches, heavy traffic, crowded parking and service areas, closed ambients. In such conditions, proceed with extreme care.

Whenever possible, avoid going over obstacles such as very rough terrain, rocks, logs, steps, ditches, railroad tracks. When obstructions must be crossed, do so with extreme care and at an angle, if possible. Slow down and select a lower gear. Ease up to the break-over point, pass the balance point slowly and ease down the other side.

In steep down-hill operation, do not allow the engine to over-speed. Select the proper gear before starting down grade.

Avoid crosswise hill travel, whenever possible. Drive up and down the slope. Should the machine start slipping sideways when going uphill, steer and turn machine front immediately downhill.

The gradient you may attempt to overcome is limited by factors such as ground conditions, load being handled, machine type and speed, and visibility.

There is no substitute for good judgement and experience when working on slopes.

Avoid operating the attachment too close to an overhang or high wall, either above or below the machine. Beware of caving edges, falling objects and landslips. Remember that such hazards are likely to be concealed by bushes, undergrowth and such.

When pushing-over trees, the machine must be equipped with proper overhead guards. Never drive a machine up the roots, particularly while the tree is being felled. Use extreme care when pushing over any tree with dead branches.

Avoid faggots, bushes, logs and rocks.

NEVER DRIVE OVER THEM, nor over any other surface irregularities that discontinue adherence or traction with the ground, especially near slopes or drop-offs.

Be alert to avoid changes in traction conditions that could cause loss of control. AVOID driving on ice or frozen ground when working on steep slopes or near drop-offs.

Working in virgin rough terrains is characterized by the presence of all the perils and risks listed above. In these conditions, it is emphasised the danger represented by large tree limbs (possibly falling on the machine), large roots (which may act as a leverage under the machine when up-rooted and cause the unit to overturn), etc.

STOPPING

When the machine is to be stopped for whatever reason, do so following the instructions given in chapters **"Stopping the machine"** and **"Shutting off the engine"** in the Operation and Maintenance Instruction Manual.

Always remember to move the gearshift lever to the neutral position and engage the control lever lock for safety purposes.

Apply the parking brake (if fitted).

NEVER LEAVE THE MACHINE UNATTENDED with the engine running.

Prior to leaving the operator's seat,and after making sure that all people are clear of the machine, always slowly lower the attachment until resting it safely to the ground

Park the machine in a non-operating and no-traffic area. Park on firm level ground. If this is not possible, position the machine at a right angle to the slope, making sure there is no danger of uncontrolled sliding. Apply the parking brake.

If parking in traffic lanes cannot be avoided, provide appropriate flags, barriers, flares and signals as required to adequately warn the oncoming drivers.

Keep head, body, limbs, hands and feet clear of the dozer, arms, bucket or ripper when raised.

Always switch off the battery isolator switch before servicing the machine in whatever manner (i.e., cleaning, repairing, maintaining, etc.). Do the same when the machine is to remain parked for prolonged periods of time to avoid accidental or unauthorized starting.

Never lower the attachments other than sitting in the operator's seat. Sound the horn. Make sure that nobody is within the machine operating range. Lower the attachment slowly. DO NOT USE FLOAT POSITION in case of hydraulic controls.

Securely block the machine and lock it every time you leave it unattended. Return keys to authorized security. Perform all necessary operations as detailed in the Operation and Maintenance Instruction Manual. Apply the parking brake (if fitted) every time you leave the machine.

MAINTENANCE

GENERALITIES

Before operating or performing any intervention on the machine:

- carefully read all the norms contained in this Manual;
- read and observe all safety plates and instructions located on the machine.

Do not allow unauthorized personnel to service the machine. Do not carry out any maintenance work without prior authorization. Follow all recommended maintenance and service procedures.

Keep the operator's compartment free of loose objects that are not properly secured.

Do not wear rings, wrist watches, jewellery, loose or hanging garments, such as ties, torn clothing, scarves, unbut-

SAFETY RULES

toned or unzipped jackets that can get caught in moving parts. Wear certified safety clothes such as: hard hat, no-slip footwear, heavy gloves, ear protection, safety glasses, reflector vests, respirators. Ask your employer about specific safety equipment requirements.

Never service the machine with someone sitting in the driver's seat, unless this person is an authorized operator assisting in the maintenance being carried out.

Keep the operator's compartment, step plates, grab rails and handles clear of foreign objects, oil, grease, mud or snow to minimize the danger of slipping or stumbling.

Clean mud or grease from your shoes before climbing on the machine or driving it.

Never attempt to operate the machine or its attachments from any position other than sitting in the operator's seat.

Never stand under the boom.

Should it be necessary to move the attachment through the hydraulic controls for maintenance purposes, remember that this should be done while sitting in the operator's seat. Before starting the machine or moving its attachment, apply the brakes, sound the horn and call that you are about to manoeuvre. Raise the attachment slowly.

Always lock machine arms or any other parts that must be lifted for maintenance purposes using adequate external means. Do not allow anyone to pass near or even below a raised yet unlocked attachment. If you are not absolutely sure about your safety, do not stay under a raised attachment, even if it is locked.

Do not place body, limbs, or fingers near articulated cutting edges of uncontrolled machine parts or deprived of the necessary guards, unless they are suitably and safely locked.

Never perform any work on the machine with the engine running, except when this is specifically required. Do not wear loose clothing, jewellery or such near moving parts.

When service or maintenance require access to areas that cannot be reached from the ground, use a ladder or step platform conforming to regulations in force. If such means are not available, use machine grab rails and steps. Always perform all service or maintenance work with the greatest care and attention.

Shop and/or field service platforms or ladders should be manufactured in accordance with safety regulations in force.

Disconnect batteries and label all controls to warn that service work is in progress. Block the machine and all attachments to be raised.

Do not check or fill fuel tanks, batteries and accumulators, nor use the starting liquid if you are smoking or near open flames. These fluids are flammable!

BRAKES ARE INOPERATIVE when manually released for servicing. Provisions must be made to maintain control of the machine using suitable blocks or other means.

The fuel filler pipe nozzle must be constantly kept in contact with the filler neck. Keep this contact from the beginning to the end of the fuelling operation to avoid possible generation of sparks due to static electricity.

Tow the machine only from the attaching points provided. Use care in making connections and ensure pins and/or bolt are firmly secured before pulling. Stay clear of drawbars, cables or chains under load.

To move a failed machine, use a trailer or a low platform truck, if available. In case towing is needed, use all necessary signals required by local regulations, and follow directions provided in this Manual.

Load/unload the machine from transporter on firm level ground providing safe support to the wheels of the truck or trailer. Use strong access ramps, with adequate height and angle. Keep the loading platform free of mud, oil or slippery materials.

Tie the machine securely to the platform of the truck or trailer and opportunely wedge machine wheels or tracks as required.

Never align holes or slots using your fingers; always use appropriate aligning tools.

Remove all sharp edges and burrs from re-worked parts.

Use only approved and effectively grounded auxiliary power sources for heaters, battery chargers, pumps and similar equipment to reduce electrical shock hazard.

Lift and handle heavy components using hoisting devices of appropriate capacity. Ensure the sling has been correctly applied. Use lifting eyes if provided. Pay attention to bystanders.

Never pour gasoline or diesel fuel into open, wide and low containers. Never use gasoline, solvents or other flammable fluids to clean parts. Use proprietary certified non-flammable, non-toxic solvents only.

When using compressed air to clean parts, wear safety glasses with side shields. Limit pressure to max 2 bars, in accordance with local safety regulations in force.

Do not run the engine in closed buildings without proper ventilation capable to remove lethal fumes.

Do not smoke, use open flames or produce sparks nearby while refuelling the unit or handling highly flammable materials.

Do not use any flame as a light source during maintenance work or to look for leaks anywhere on the machine.

Make sure that all tools provided are in good condition at all times. NEVER USE tools with mushroomed or damaged heads. Always wear eye protections.

Move with extreme care when working under the machine, its attachments, and even on or near them. Always wear protective safety equipment as required, such as hard hat, goggles, safety shoes, and ear plugs.

SAFETY RULES

In case tests during which the engine should be kept runinng, a qualified operator must sit in the driver's seat with the mechanic in sight at all times. Place the transmission in neutral, apply and lock the brakes. KEEP HANDS OFF MOVING PARTS.

In case of field service, move machine to level ground, if possible, and block it. If work on an incline cannot be advised, block the machine and its attachments securely. Move damaged to level ground as soon as possible.

Do not trust worn and/or kinked chains and cables. Never use them for lifting or pulling. Always wear heavy gloves to handle chains or cables.

Be sure chains and cables are firmly fastened and that anchor points are strong enough to withstand the expected load. Nobody should stay near the anchor points, cables or chains. DO NOT PULL OR TOW UNLESS THE OPERATOR'S COMPARTMENTS OF THE MACHINES INVOLVED ARE FITTED WITH THE PROPER GUARDS AGAINST BACKLASH IN CASE OF CABLE OR CHAIN FAILURE OR DETACHMENT.
Keep the area where maintenance is carried out CLEAN and DRY at all times. Clean immediately all water and oil spillages.

Do not pile up oily or greasy rags as they represent a major fire hazard. Always store them in closed metal containers.

Before starting the machine or its attachment, check, adjust and lock the operator's seat. Also ensure that nobody is within the machine operating range. Sound the horn.

Rust inhibitors are volatile and flammable. Use them only in well ventilated areas. Keep open flames away - DO NOT SMOKE - Store containers in a cool well ventilatedplace where they could not be reached by unauthorised people.

Do not carry loose objects in your pockets that might fall unnoticed into open compartments.

Wear safety glasses with side shields, hard hat, safety shoes, heavy gloves when metal particles or similar may be ejected and hit you.

Wear appropriate protective equipment such as dark safety glasses, hard hat, protective clothing, special gloves and footwear while welding. Nearby persons should also wear dark safety glasses even if they are not welding. DO NOT LOOK THE WELDING ARC WITHOUT PROPER EYE PROTECTION.

Become acquainted with all your jacking equipment and its capacity. Remember that the jacking point on the machine should be appropriate for the load applied. Also, be sure the support area of the jack at the machine and on the ground is appropriate and stable.

Any load supported by a jack represents a possible hazard. Always transfer the load onto appropriate support means according to local or national safety requirements before proceeding with service or maintenance work.

Metal cables get frayed after prolonged use. Always wear appropriate protections (heavy gloves, goggles, etc.) while handling them.

Handle all parts carefully. Keep hands and fingers away from gaps, gears, and similar. Always use and wear the appropriate protections.

Water can build up in pneumatic systems from condensate moisture due to changes in atmospheric conditions. If necessary, drain such deposits following instructions.

Before carrying out any maintenance work or service, lock the machine articulated frame modules using the appropriate safety device. Remember to remove and store it properly at the end of work.

If the machine is equipped with hydraulic brakes, make sure that the reservoir is always filled up to the correct level.

Always block all wheels, front and rear, before bleeding the braking system or disconnecting control hoses and/or cylinders.

STARTING

Do not run the engine in closed buildings without proper ventilation capable to remove lethal exhaust fumes.

Do not place head, body, limbs, feet, hands or fingers near rotating fans or belts.

Be especially careful near blower fans.

REMEMBER THAT THE STARTING FLUID IS HIGHLY FLAMMABLE. Follow recommendations provided in this Manual and printed on the containers. Containers must be stored in a cool, well ventilated place out of the reach of unauthorised persons.
DO NOT PUNCTURE OR BURN CONTAINERS.

ENGINE

Loosen the radiator cap very slowly to relieve system pressure before removing it. Always top-up coolant level with the engine off.

Avoid that flammable materials could touch exhaust parts. If not possible, provide necessary protections.

Do not refuel with the engine running, especially if hot, as this increases fire hazard.

Never attempt to check or adjust fan belt tensions when the engine is running.

Do not adjust the fuel pump when the machine is motion.

SAFETY RULES

Do not lubricate the machine with the engine running.

Do not run the engine with air intakes, door or guards open.

ELECTRICAL SYSTEM

Always disconnect the batteries prior to any intervention on the machine or its electrical system (cleaning, repair, maintenance).

Should booster batteries be used, remember to connect ends of the booster cables in the proper manner: (+) to (+) and (-) to (-). Do not short-circuit terminals. Thoroughly follow instructions given in this Manual.

Before any intervention, make sure that the battery isolator switch is off.

BATTERY GAS IS HIGHLY FLAMMABLE. Leave the battery compartment open during recharging to improve ventilation. Never check battery charge by placing metal objects across the posts. Keep sparks or open flames away from batteries. Do not smoke near the battery to prevent explosion hazard.

Before any intervention, make sure that there are no fuel or electrolyte leakages. If any, correct prior to proceeding with further work. Do not recharge batteries in confined spaces. Ensure proper ventilation is provided to avoid accidental explosions due to build-up of gas released during charging.

HYDRAULIC SYSTEM

Pressure fluid escaping from a very small hole can be almost invisible and still have sufficient force to penetrate the skin. Always check any suspected pressure leaks using a piece of cardboard or wood. DO NOT USE HANDS. If injured by escaping fluid, obtain medical attention immediately or serious infection or reaction may develop.

Stop the engine and relieve all system pressure before removing panels, housings, caps, plugs or covers.

Always use gauges of adequate capacity (end-of-scale reading) and follow recommended procedures.

TOOLS

Always keep head, body, limbs, feet, or hands away from bucket, blade, or ripper when in the raised position. Prior to any intervention, install all safety devices according to current regulations. In case the attachment is to be operated through the machine hydraulic system for maintenance purposes, remember to do so only while sitting in the driver's seat. Make sure that nobody is within the machine operating range. Before operating the attachment, alert people by sounding the horn and by voice. Raise the attachment slowly.

Do not use the machine to transport loose objects, unless proper devices to this purpose are provided.

Clutches and brakes of this machine as well as auxiliary devices and attachments (such as drive cylinder or winch control valves) should always be properly adjusted in accordance with the instructions provided by the Manufacturer. Never perform adjustments with the engine running, except when this is specifically required by the relevant procedures.

TYRES AND WHEELS

Make sure that the tyre inflation pressure corresponds to specifications issued by the Manufacturer. Regularly check inflation pressure.

Should pressure be changed, do this while staying on the tyre side and at a safe distance.

Pressure checks should always be carried out with the machine unloaded and cold tyres.

Never use reconditioned tyre rims, since possible weldings, incorrect heat-treatments or repairs can weaken the wheels and cause damages or failures.

Do not cut, nor weld rims with inflated tyres installed.

The spare tyre should be inflated only enough to keep the rim components assembled. Remember that when not installed on the disc, a tyre inflated to maximum pressure can **explode**.

Therefore, maximum care must be taken when handling a fully inflated tyre.

Before servicing tyres, block all wheels, front and rear. After jacking up the machine, block it in the raised position using suitable stands conforming to current safety regulations.

Deflate the tyre before removing objects from the tyre tread.

Never inflate tyres with flammable gas: explosions and severe bodily injuries may result !!

When starting your work shift, check for loose wheel or rim bolts and brackets and retighten to correct torque as necessary.

SAFETY RULES

WARNING

Ensure that the attachment is safely resting on to the ground before repairing,adjusting, or servicing machines fitted with hydraulically, mechanically or cable controlled attachments (such as excavators, loaders, dozers, scrapers, etc.). Should it be necessary to partially or fully raise the hydraulically, mechanically, or cable controlled attachment to gain access to certain items, make sure the attachment is adequately retained in the raised position by means other than the hydraulic lift cylinders, cable and/or mechanical devices used for controlling it.

UNITS OF MEASURE

Units of measure used in this manual are those adopted by the International System which replace the units previously used by the M.K.S. system.

Force: decanewton (daN) replaces kilogram (kg)

Pressure: bar, replaces kg/cm²

Torque: decanewton x meter (daNm) replaces kgm

The following tables is to be used to convert units of measure:

	multiply	by	to obtain
Force	kg	0.9807	daN
Pressure	kg/cm²	0.9807	bar
Torque	kgm	0.9807	daNm

Note - For current service use, the following equivalences can be considered to be valid:
kg = daN; kg/cm² = bar; kgm = daNm.

CLASSIFICATION OF STANDARD COMPONENTS TO DETERMINE THE TIGHTENING TORQUES

Note - In case, in the different sections, the tightening torque is not listed, refer to the table "TIGHTENING TORQUES", only after identifying exactly the component.

The latter is identified by a coded eight digit number, allowing a complete description of the item.

Example:

[l] / [a] [b] [c] [d] [e] / [f] [g]

l - Standard index digit

It is always represented by the digit 1. This number indicates that the item can be fabricated in a number of versions differing for material and coating.

a - b - c - d - e - Standard base digits

It is a number always composed of five digits identifying dimensional specifications of the item.

f - Material index digit

This digit indicates the material used for a defined item. Its meaning is indicated in the table that follows.

g - Coating index digit

It indicates the coating applied to a defined item.

Material index (f)	Resistance class and material					
	FIAT	**UNI**	**DIN**	**SAE**	**BSI**	**BNA**
0	R 40	4D - 4S - 4A		1	A	42
1	R50	5S - 6S		3	P	56
2	R80	8G		5	T	80
3	R100	100	10K	8	V	100
4	Brass	Brass	Messing	Brass	Brass	Laiton
5	Alluminio	Alluminio	Aluminium	Aluminium	Aluminium	Aluminium
6	Copper	Copper	Kupfer	Copper	Copper	Cuivre
7	Blank for other metallic materials					

WARNING

- Lubricate all hardware until 24 dia., with engine oil. Use grease for larger diameters.
- Tolerance on torque: ± 5%
- Resistance classes R80, R100, R120 must be understood as follows:

10.9 replaces R100
12.9 " R120
for screws

10 replaces R80
12 " R100
for nuts

CDT= cadmed; FOSF= phosphated; ZNT= galvanised.

TORQUE TABLES

If correct torque is not specifically indicated in the relevant pages, refer to the following tables.

NUTS (ZNT)					SCREWS (ZNT / DEIDR)		
Strength grade: 10 (R 80)					Strength grade: 10.9 (R 100)		
Diameter and pitch mm	normal daNm	low type daNm	with polyamide ring normal daNm	with polyamide ring low type daNm	Diameter and pitch mm	normal ZNT daNm	self-locking ZNT daNm
M6 x 1	1.3	1.2	-	-	M6 x 1	1.3	-
M8 x 1.25	3.2	2.6	3.9	3.2	M8 x 1.25	1.3	3.5
M10 x 1.25	7.2	5.2	8.2	6.2	M10 x 1.25	7.1	7.9
M10 x 1.5	6.5	5	7.7	6	M10 x 1.5	6.5	7
M12 x 1.25	13	8.7	14.5	10.2	M12 x 1.25	12.7	13.9
M12 x 1.75	11	8.1	12.9	9.6	M12 x 1.75	11	12
M14 x 1.5	19.5	13	21.6	15	M14 x 1.5	20	22
M14 x 2	18	12.5	20	14.6	M14 x 2	18	19
M16 x 1.5	30	17	34	20	M16 x 1.5	30	33
M 16 x 2	-	-	-	-	M16 x 2	-	-
M18 x 1.5	45	25	50	29	M18 x 1.5	45	48
M18 x 2.5	-	-	-	-	M18 x 2.5	-	-
M20 x 1.5	60	30.5	64.5	35	M20 x 1.5	60	65
M20 x 2.5	-	-	-	-	M20 x 2.5	-	-
M22 x 1.5	80	41	-	-	M22 x 1.5	80	90
M22 x 2.5	-	-	-	-	M22 x 2.5	-	-
M24 x 2	100	47	108	52.5	M24 x 2	100	110
M24 x 3	-	-	-	-	M24 x 3	-	-
M27 x 2	95	40.1	-	-	M27 x 2	100	-
M30 x 2	130	49.4	-	-	M30 x 2	140	-
M33 x 2	170	-	-	-	M33 x 2	190	-
M36 x 3	220	-	-	-	M36 x 3	240	-

SECTION 1

ENGINE

CONTENTS

PARAGRAPH	SUBJECT	PAGE
1.1	GENERAL DESCRIPTION	1
1.2	GENERAL SPECIFICATIONS	2
1.3	DATA - MOUNTING CLEARANCES	5
1.4	INJECTION PUMP SETTING DATA	11
1.4.1	8065.25.290	11
1.4.2	8065.25.291	12
1.5	OUTER VIEWS	13
1.6	ENGINE SUPPORTS	14
1.7	MAIN TIGHTENING TORQUES AND PRESSURE PICK-UP POINTS	15
1.8	LUBRICATION SYSTEM	16
1.9	COOLING SYSTEM	17
1.9.1	General description	18
1.9.2	Radiator	19
1.10	FUEL FEEDING	20
1.10.1	Fuel reservoir	21
1.11	AIR INTAKE AND EXHAUST SYSTEM	22
1.11.1	General description	22
1.11.2	Turbo charger	22
1.11.3	Air cleaner	24
1.12	ELECTRICAL SYSTEM	25
1.12.1	Batteries	25
1.12.2	Starter switch	25
1.12.3	Starting a cold engine	26
1.12.4	Engine cut-off device	26
1.12.5	Engine pre-heating functional sequence	27
1.12.6	Pre-heating malfunctions indicator light	27
1.12.7	Accelerator control linkage	28

1.1 GENERAL DESCRIPTION

The engine on this loader is a turbo charged 4 stroke diesel engine, water cooled, overhead valves, with direct injection with rotary pump. The negine is mounted on the rear end of the loader and its power is driven from the flywheel to the torque converter through a flexible disc diaphragm.

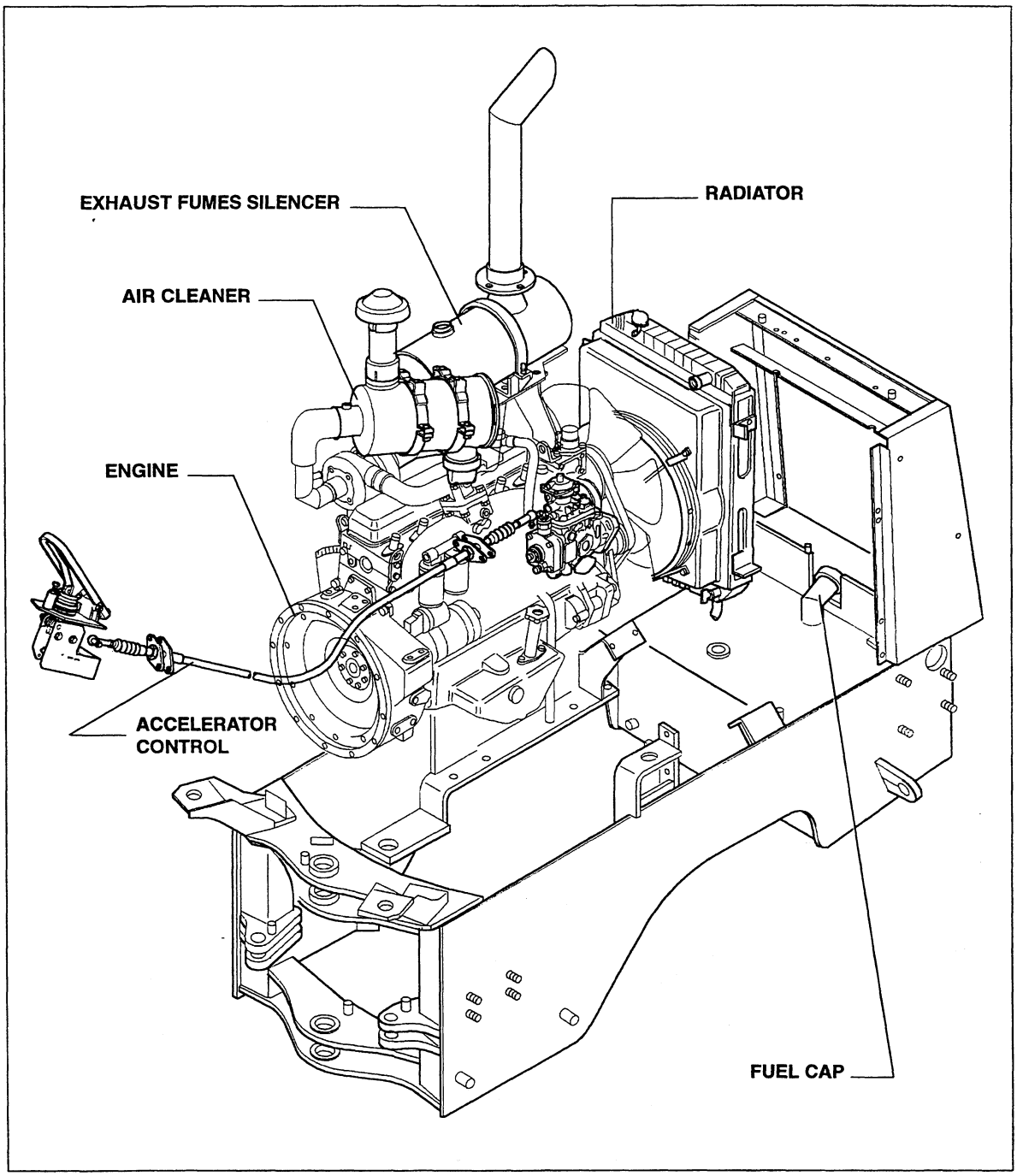

Fig. 1-1 Engine and accessories

1.2 GENERAL SPECIFICATIONS

		W 110	W 130
Type		8065.25.290	8065.25.291
Cycle		4 stroke, direct injection, turbo charged Diesel	
Quantity of cylinders		6 in-line	
Diameter	mm	104	
Stroke	mm	115	
+ + +.. = Total displacement cu cm (cu in)		5861	
Compression ratio		18 : 1	
Max. power	KW	83	94.7
	rpm	2300	2200
Max. torque	daNm	44.1	56.9
	rpm	1500	1500
Minimum idle speed	rpm	790 ÷ 870	785 ÷ 865
Maximum idle speed	rpm	2430 ÷ 2530	2350 ÷ 2450
Maximum speed with stalling converter	rpm	2310 ÷ 2410	2100 ÷ 2200
Maximum speed with stalling equipment	rpm	2300 ÷ 2400	2240 ÷ 2340
Minimum speed with stalling steering	rpm	> 600	> 600

	W 110	W 130
	8065.25.290	8065.25.291
Maximum speed with stalling equipment + steering rpm	1510 ÷ 1710	1470 ÷ 1670
Pressure at T.D.C. (*) bar	≥	
Minimum allowed pressure at T.D.C. (*) bar	≥	
Engine dragging speed rpm	~	
TIMING		
starting B.T.D.C. A end A.B.D.C. B	12° 31°	
starting B.T.D.C. D end A.B.D.C. C	50° 16°	
Operational (*) X mm	0.30	
Operational (*) X mm	0.30	
FUEL FEEDING	By fuel pump - injection pum - filters - injectors - starter heater	
Type:	BOSCH VE 6/12 F 1150 RV	BOSCH VE 6/12 F 1100 RV
Pump timing	7° ± 1	6° $^{+0}_{-1}$
Delivery starting mm	1	
Injector nozzle type	DLLA 13251320	
Firing order - injection pump - engine	 A - B - C - D - E - F 1 - 5 - 3 - 6 - 2 - 4	
Injection pressure bar	260 + 12	

(*) The value of the pressure is measured rotating the engine using the electric starter motor only, with oil temperature of 40 - 50°C (104 - 122°F) and injection pump in stop condition.

	W 110	W 130
	8065.25.290	8065.25.291
TURBO CHARGING		
turbocharger type	GARRET TO 4B	
LUBRICATION	Forced by gear pumps, pressure relief valve, double filtration oil filters	
Oil pressure with hot engine:		
- at min. speed bar	≥ 1.2	
- at max. speed bar	≥ 3.5	
COOLING	Centrifugal pump, thermostat regulation, fan, radiator, heat exchanger.	
Water pump drive	V belts	
Thermostat		
- beginning of opening	79° ± 2° C	
- max. opening		
OIL CAPACITIES		
Total capacity 1st filling: Kg	14.5	
Periodic change capacity:		
- engine sump Kg	12	
- engine sump + filter Kg	13.2	

1.3 DATA - MOUNTING CLEARANCES

CYLINDER GROUP AND CRANKING COMPONENTS		W 110	W 130
		8065.25.290	8065.25.291
		mm	
Ø1	Seat of cylinder liners: Ø 1	106.85 ÷ 106.90	
L, Ø 2	Cylinder liners:		
	outside diameter Ø 2	107.02 ÷ 107.05	
	length L	198.00 ÷ 198.50	
	Cylinder liners - cylinder block bore	0.12 ÷ 0.2	
FIAT HITACHI PARTS >	Outside diameter Ø 3	+ 0.2	
Ø3, X	Cylinder liners:		
	inside diameter Ø 2	104.000 ÷ 104.024	
	protrusion X		
Ø1, X, Ø 2	Pistons: dimension of measurement X	12	
	outside diameter Ø 1	103.870 ÷ 103.852	
	pin bore Ø 2	38.000 ÷ 38.006	
	Piston - cylinder liner	0.130 ÷ 0.172	
FIAT HITACHI PARTS <	Piston diameter Ø 1	0.6	
X	Protrusion of pistons X	0.64 ÷ 0.97	
Ø3	Piston pin Ø 3	37.984 ÷ 37.990	
	Piston pin - pin bore	0.010 ÷ 0.022	
X1, X2, X3	Piston ring grooves X 1 *	2.73 ÷ 2.70	
	X 2	2.55 ÷ 2.57	
	X 3	4.03 ÷ 4.05	
* The dimension is measured on the diameter 101 mm			

CYLINDER GROUP AND CRANKING COMPONENTS		W 110	W 130
		8065.25.290	8065.25.291
		mm	
S 1 S 2 S 3 Piston rings	S 1*	2.595 ÷ 2.575	
	S 2	2.478 ÷ 2.490	
	S 3	3.975 ÷ 3.990	
* The dimension is measured on the diameter 101 mm			
Piston rings - grooves	1	0.105 ÷ 0.155	
	2	0.060 ÷ 0.092	
	3	0.040 ÷ 0.075	
FIAT HITACHI PARTS > Piston rings		0.6	
X 1 X 2 X 3	Piston ring gap in cylinder liners:		
	X 1	0.40 ÷ 0.65	
	X 2	0.30 ÷ 0.55	
	X 3	0.30 ÷ 0.55	
Ø 1 Bushing seat in conrod small end	Ø 1	41.846 ÷ 41.884	
Ø 2 conrod bearing seat	Ø 2	67.407 ÷ 67.422	
Ø 4 Ø 3 Diameter of conrod small end bushing outside	Ø 4	41.979 ÷ 42.017	
inside	Ø 3	38.004 ÷ 38.014	
S Conrod half bearings	S	1.805 ÷ 1.815	
Conrod small end bushing - bore		0.095 ÷ 0.171	
Piston pin bushing		0.014 ÷ 0.031	
FIAT HITACHI PARTS < Conrod half bearings		0.254 - 0.508	
X Posizion of measurement	X	125	
Max. discrepancy of parallelism between center lines of conrod	=	0.07	

Product: Fiatallis FW110/FW130 Wheel Loader Service Repair Manual
Full Download: https://www.arepairmanual.com/downloads/fiatallis-fw110-fw130-wheel-loader-service-repair-manual/

CYLINDER GROUP AND CRANKING COMPONENTS		W 110	W 130
		8065.25.290	8065.25.291
		mm	
Ø1 Ø2	Main journals Ø 1	79.791 ÷ 79.810	
	Crankpin journals Ø 2	63.744 ÷ 63.725	
S 1 S 2	Main journal half bearings S 1	2.169 ÷ 2.178	
	Crankpin journal half bearings S 2	1.805 ÷ 1.815	
Ø 3	Main journals Ø 3	84.200 ÷ 84.230	
	Half bearings - main journal Half bearings - crankpin journal	0.034 ÷ 0.101 0.033 ÷ 0.087	
FIAT HITACHI PARTS <	Half bearings Half bearings	0.254 ÷ 0.508	
X 1	Main journal for thrust ring X 1	32.0 ÷ 32.1	
X 2	Center main journal support X 2	25.010 ÷ 25.060	
X 3	Thrust half washers X 3	3.378 ÷ 3.429	
	Crankshaft thrust washer clearance	0.082 ÷ 0.334	
FIAT HITACHI PARTS >	Thrust half washers	0.127 - 0.254 - 0.508	
1 2	Alignment = 1	≥ 0,10	
	Alignment = 2	± 0.25	
	Out of round 1-2	0.008	
	Taper 1-2	0.012	

Sample of manual. Download All 355 pages at:
https://www.arepairmanual.com/downloads/fiatallis-fw110-fw130-wheel-loader-service-repair-manual/