Product: New Holland 840CD\880CF Draper Header Service Repair Manual
Full Download: https://www.arepairmanual.com/downloads/new-holland-840cd880cf-draper-header-service-repair-manual/

SERVICE MANUAL

840CD \ 880CF

Draper Header

PIN YHH042800 and above

Part number 48144012
1st edition English
May 2017

NEW HOLLAND
AGRICULTURE

Sample of manual. Download All 527 pages at:
https://www.arepairmanual.com/downloads/new-holland-840cd880cf-draper-header-service-repair-manual/

Product: New Holland 840CD\880CF Draper Header Service Repair Manual
Full Download: https://www.arepairmanual.com/downloads/new-holland-840cd880cf-draper-header-service-repair-manual/

NEW HOLLAND
AGRICULTURE

SERVICE MANUAL

840CD Rigid draper header (25 ft) [YHH042800 -], 840CD Rigid draper header (30 ft) [YHH042800 -], 840CD Rigid draper header (35 ft) [YHH042800 -], 840CD Rigid draper header (40 ft) [YHH042800 -], 840CD Rigid draper header (40 ft), export [YHH042800 -], 840CD Rigid draper header (45 ft) [YHH042800 -], 840CD Rigid draper header (45 ft), export [YHH042800 -], 840CD [YHH042800 -], 880CF Flex draper header (25 ft) [YHH042800 -], 880CF Flex draper header (30 ft) [YHH042800 -], 880CF Flex draper header (35 ft) [YHH042800 -], 880CF Flex draper header (40 ft) [YHH042800 -], 880CF Flex draper header (40 ft), export [YHH042800 -], 880CF Flex draper header (45 ft) [YHH042800 -], 880CF Flex draper header (45 ft), export [YHH042800 -], 880CF [YHH042800 -]

Sample of manual. Download All 527 pages at:
https://www.arepairmanual.com/downloads/new-holland-840cd880cf-draper-header-service-repair-manual/

48144012 08/05/2017

Contents

INTRODUCTION

Hydraulic systems 35

[35.000] Hydraulic systems 35.1

[35.300] Reservoir, cooler, and filters 35.2

[35.359] Main control valve 35.3

[35.420] Reel vertical positioning system 35.4

[35.430] Reel fore-and-aft positioning system 35.5

[35.910] Head and header hydraulic drive 35.6

Wheels 44

[44.536] Gauge wheels 44.1

Electrical systems 55

[55.000] Electrical system 55.1

[55.100] Harnesses and connectors 55.2

[55.670] Header leveling control 55.3

[55.675] Reel speed and position control 55.4

[55.421] Feeding control system 55.5

[55.404] External lighting 55.6

Attachments/Headers 58

[58.100] Attachment/Header support and drives 58.1

[58.101] Attachment/Header reel 58.2

[58.105] Attachment/Header reel control system 58.3

[58.110] Attachment/Header cutting mechanism 58.4

[58.120] Attachment/Header feed auger 58.5

[58.130] Attachment/Header frame 58.6

[58.224] Header drive 58.7

[58.900] Belt feeding 58.8

Platform, cab, bodywork, and decals 90

[90.105] Machine shields and guards 90.1

INTRODUCTION

Contents

INTRODUCTION

Foreword - Important notice regarding equipment servicing (*) 3
Safety rules - Ecology and the environment (*) 4
Safety rules (*) 5
Safety rules - Personal safety (*) 6
Power Take-Off (PTO) shaft - Safety rules - Power Take-Off (PTO) (*) 7
Transport locking assembly Cylinder stop - Safety rules - Lift cylinder safety locks (*) 8
Safety signs 10
Torque - Minimum tightening torques for normal assembly (*) 21
Torque - Standard torque data for hydraulics (*) 26
Basic instructions - Shop and assembly (*) 28
Basic instructions - Chain wear tables - Roller chains (*) 30
General specification - General welding (*) 32
General specification Machine specifications - Flex headers (*) 33
General specification Machine specifications - Rigid headers (*) 35
Capacities (*) 37
Product identification (*) 39
Machine orientation - Machine orientation 40

(*) See content for specific models

Foreword - Important notice regarding equipment servicing

840CD	
880CF	

All repair and maintenance work listed in this manual must be carried out only by qualified dealership personnel, strictly complying with the instructions given, and using, whenever possible, the special tools.

Anyone who performs repair and maintenance operations without complying with the procedures provided herein shall be responsible for any subsequent damages.

The manufacturer and all the organizations of its distribution chain, including - without limitation - national, regional, or local dealers, reject any responsibility for damages caused by parts and/or components not approved by the manufacturer, including those used for the servicing or repair of the product manufactured or marketed by the manufacturer. In any case, no warranty is given or attributed on the product manufactured or marketed by the manufacturer in case of damages caused by parts and/or components not approved by the manufacturer.

The manufacturer reserves the right to make improvements in design and changes in specifications at any time without notice and without incurring any obligation to install them on units previously sold. Specifications, descriptions, and illustrative material herein are as accurate as known at time of publication but are subject to change without notice.

In case of questions, refer to your NEW HOLLAND Sales and Service Networks.

Safety rules - Ecology and the environment

840CD	
880CF	

Soil, air, and water quality is important for all industries and life in general. When legislation does not yet rule the treatment of some of the substances that advanced technology requires, sound judgment should govern the use and disposal of products of a chemical and petrochemical nature.

Familiarize yourself with the relative legislation applicable to your country, and make sure that you understand this legislation. Where no legislation exists, obtain information from suppliers of oils, filters, batteries, fuels, anti-freeze, cleaning agents, etc., with regard to the effect of these substances on man and nature and how to safely store, use, and dispose of these substances.

Helpful hints

- Avoid the use of cans or other inappropriate pressurized fuel delivery systems to fill tanks. Such delivery systems may cause considerable spillage.
- In general, avoid skin contact with all fuels, oils, acids, solvents, etc. Most of these products contain substances that may be harmful to your health.
- Modern oils contain additives. Do not burn contaminated fuels and or waste oils in ordinary heating systems.
- Avoid spillage when you drain fluids such as used engine coolant mixtures, engine oil, hydraulic fluid, brake fluid, etc. Do not mix drained brake fluids or fuels with lubricants. Store all drained fluids safely until you can dispose of the fluids in a proper way that complies with all local legislation and available resources.
- Do not allow coolant mixtures to get into the soil. Collect and dispose of coolant mixtures properly.
- The air-conditioning system contains gases that should not be released into the atmosphere. Consult an air-conditioning specialist or use a special extractor to recharge the system properly.
- Repair any leaks or defects in the engine cooling system or hydraulic system immediately.
- Do not increase the pressure in a pressurized circuit as this may lead to a component failure.
- Protect hoses during welding. Penetrating weld splatter may burn a hole or weaken hoses, allowing the loss of oils, coolant, etc.

Battery recycling

Batteries and electric accumulators contain several substances that can have a harmful effect on the environment if the batteries are not properly recycled after use. Improper disposal of batteries can contaminate the soil, groundwater, and waterways. NEW HOLLAND strongly recommends that you return all used batteries to a NEW HOLLAND dealer, who will dispose of the used batteries or recycle the used batteries properly. In some countries, this is a legal requirement.

Mandatory battery recycling

NOTE: *The following requirements are mandatory in Brazil.*

Batteries are made of lead plates and a sulfuric acid solution. Because batteries contain heavy metals such as lead, CONAMA Resolution 401/2008 requires you to return all used batteries to the battery dealer when you replace any batteries. Do not dispose of batteries in your household garbage.

Points of sale are obliged to:

- Accept the return of your used batteries
- Store the returned batteries in a suitable location
- Send the returned batteries to the battery manufacturer for recycling

Safety rules

840CD	
880CF	

Personal safety

This is the safety alert symbol. It is used to alert you to potential personal injury hazards. Obey all safety messages that follow this symbol to avoid possible death or injury.

Throughout this manual you will find the signal words DANGER, WARNING, and CAUTION followed by special instructions. These precautions are intended for the personal safety of you and those working with you.

Read and understand all the safety messages in this manual before you operate or service the machine.

⚠ DANGER indicates a hazardous situation that, if not avoided, will result in death or serious injury.

⚠ WARNING indicates a hazardous situation that, if not avoided, could result in death or serious injury.

⚠ CAUTION indicates a hazardous situation that, if not avoided, could result in minor or moderate injury.

FAILURE TO FOLLOW DANGER, WARNING, AND CAUTION MESSAGES COULD RESULT IN DEATH OR SERIOUS INJURY.

Machine safety

NOTICE: *Notice indicates a situation that, if not avoided, could result in machine or property damage.*

Throughout this manual you will find the signal word Notice followed by special instructions to prevent machine or property damage. The word Notice is used to address practices not related to personal safety.

Information

NOTE: *Note indicates additional information that clarifies steps, procedures, or other information in this manual.*

Throughout this manual you will find the word Note followed by additional information about a step, procedure, or other information in the manual. The word Note is not intended to address personal safety or property damage.

Safety rules - Personal safety

840CD	
880CF	

Carefully study these precautions, and those included in the external attachment operators manual, and insist that they be followed by those working with and for you.

1. Thoroughly read and understand this manual and the attachment Operator's Manual before operating this or any other equipment.
2. Be sure all people and pets are clear of the machine before starting. Sound the horn, if equipped, three times before starting engine.
3. Only the operator should be on the machine when in operation. Never allow anyone to climb on to the machine while it is in motion. If the machine is equipped with an Instructors Seat, this must only be used for training purposes. Passengers must not be allowed to use the Instructors Seat.
4. Keep all shields in place. Never work around the machine or any of the attachments while wearing loose clothing that might catch on moving parts.
5. Observe the following precautions whenever lubricating the machine or making adjustments.

   - Disengage all clutching levers or switches.
   - Lower the attachment, if equipped, to the ground or raise the attachment completely and engage the cylinder safety locks. Completing these actions will prevent the attachment from lowering unexpectedly.
   - Engage the parking brake.
   - Shut off the engine and remove the key.
   - Wait for all machine movement to stop before leaving the operators platform.

6. Always keep the machine in gear while travelling downhill.
7. The machine should always be equipped with sufficient front or rear axle weight for safe operation.
8. Under some field conditions, more weight may be required at the front or rear axle for adequate stability. This is especially important when operating in hilly conditions or/when using heavy attachments.
9. Always lower the attachment, shut off the engine, set the parking brake, engage the transmission gears, remove the key and wait for all machine movement to stop before leaving the operators platform.
10. If the attachment or machine should become obstructed or plugged; set the parking brake, shut off the engine and remove the key, engage the transmission gears, wait for all machine or attachment motion to come to a stop, before leaving the operators platform to removing the obstruction or plug.
11. Never disconnect or make any adjustments to the hydraulic system unless the machine and/or the attachment is lowered to the ground or the safety lock(s) is in the engaged position.
12. Use of the flashing lights is highly recommended when operating on a public road.
13. When transporting on a road or highway, use accessory lights and devices for adequate warning to the operators of other vehicles. In this regard, check local government regulations. Various safety lights and devices are available from your NEW HOLLAND dealer.
14. Practice safety 365 days a year.
15. Keep all your equipment in safe operating condition.
16. Keep all guards and safety devices in place.
17. Always set the parking brake, shut off the engine and remove the key, engage the transmission gears, wait for all machine or attachment motion to come to a stop, before leaving the operators platform to service the machine and attachment.
18. Remember: A careful operator is the best insurance against an accident.
19. Extreme care should be taken in keeping hands and clothing away from moving parts.

Power Take-Off (PTO) shaft - Safety rules - Power Take-Off (PTO)

840CD	
880CF	

⚠ WARNING

Avoid injury! Always do the following before lubricating, maintaining, or servicing the machine.
1. **Disengage all drives.**
2. **Engage parking brake.**
3. **Lower all attachments to the ground, or raise and engage all safety locks.**
4. **Shut off engine.**
5. **Remove key from key switch.**
6. **Switch off battery key, if installed.**
7. **Wait for all machine movement to stop.**

Failure to comply could result in death or serious injury.

W0047A

The Power Take-Off (PTO) shaft on your header is equipped with a drive shaft shield **(1)** and chains. The shields protect the operator from the PTO shaft while the shaft is rotating. The shield chains prevent the shield from rotating while the PTO shaft is connected to the combine and turning.

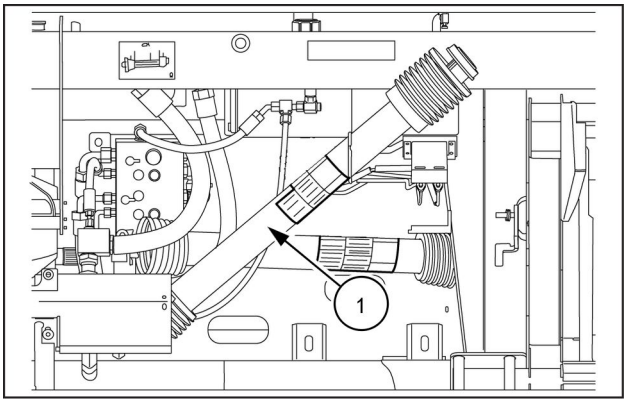

83112562 1

The rear PTO shaft, that connects to the combine, right-hand side chain **(1)** is attached to a loop in the adapter.

Connect the left hand shield chain to the hole provided in the steel PTO slip clutch shield.

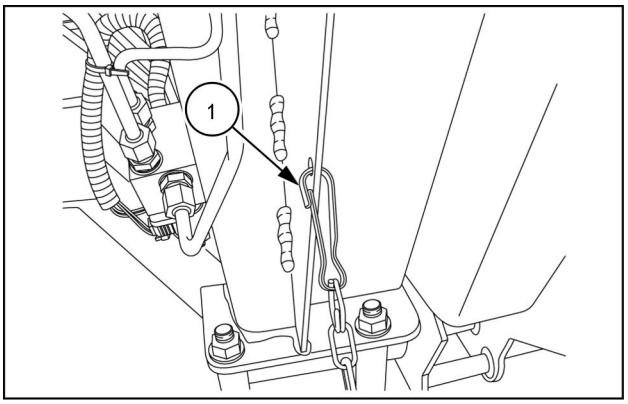

83118612 2

The front PTO shaft, that drives the auger, right-hand side chain **(1)** hooks to hole in backsheet **(2)**.

Left side chain **(4)** hooks to hole in backsheet **(3)**.

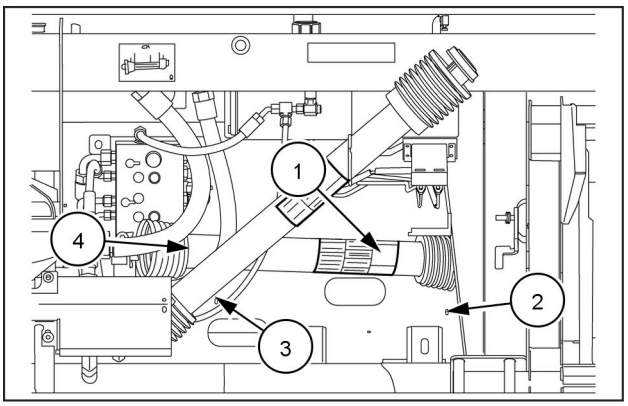

83112562A 3

Transport locking assembly Cylinder stop - Safety rules - Lift cylinder safety locks

840CD	
880CF	

⚠ WARNING

Crushing hazard!
ALWAYS make sure the work area is clear of bystanders and domestic animals before raising or lowering the equipment.
Failure to comply could result in death or serious injury.

W0123A

Your NEW HOLLAND header is equipped with reel lift cylinder locks **(1)**.

NOTE: *The header must be connected to the combine for operation.*

To engage the lift cylinder locks:

1. Use your combine's reel lift switch to raise the reel completely.
2. Lift the lock from its storage holder **(2)**.

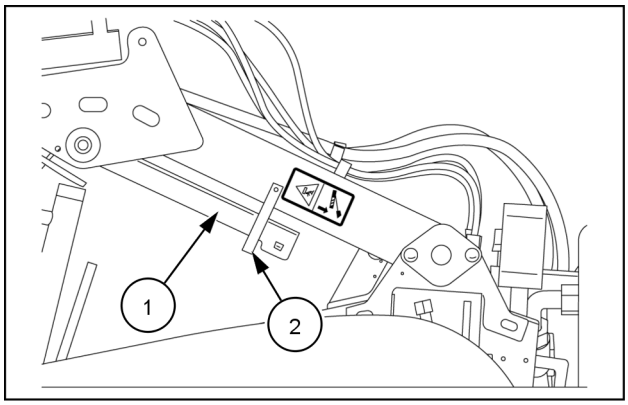

83112567 1

Left-hand side

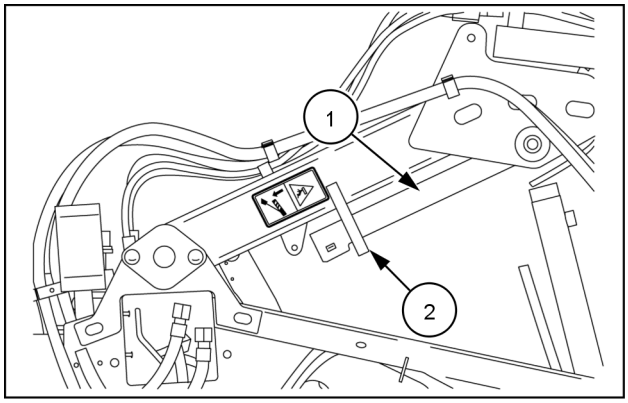

83112568 2

Right-hand side

3. Swing the lock **(1)** down over the cylinder shaft.

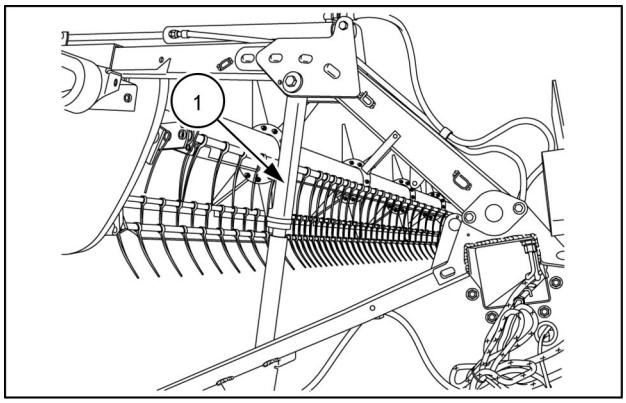

83114725 1 3

Left-hand side

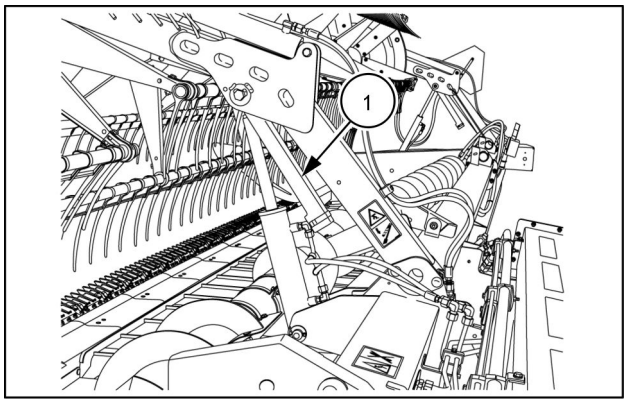

83117559 4

Center, split reel equipped only

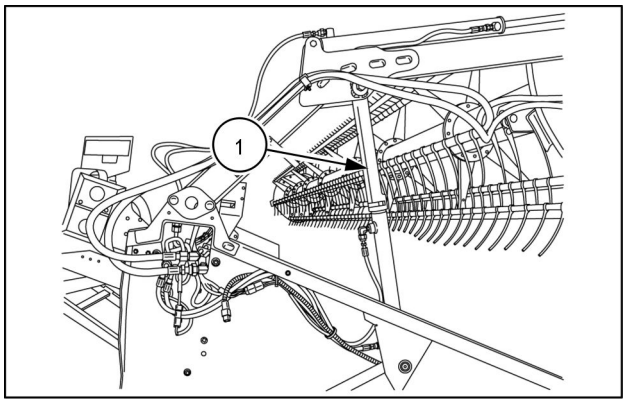

83112595 5

Right-hand side

To store the locks:

1. If the reel has settled so that the locks are against the cylinders;
   - Raise the reel to it's highest point.
2. Raise the lock from the cylinder and place it in on the storage hanger **(1)**.
3. Lower the reel to the desired height.

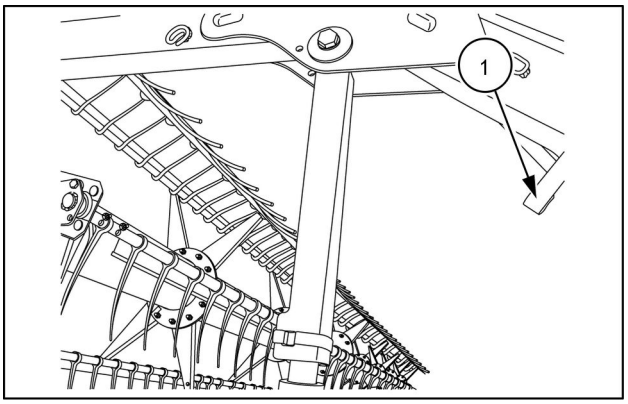

83114726 6

Safety signs

The following safety signs are placed on your machine as a guide for your safety and for those working with you. Walk around the machine and note the content and location of these safety signs before operating your machine.

Keep safety signs clean and legible. Clean safety signs with a soft cloth, water, and a gentle detergent. Do not use solvent, gasoline, or other harsh chemicals. Solvents, gasoline, and other harsh chemicals may damage or remove safety signs.

Replace all safety signs that are damaged, missing, painted over, or illegible. If a safety sign is on a part that is replaced, make sure the safety sign is installed on the new part. See your dealer for replacement safety signs.

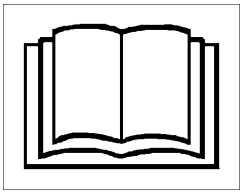

Safety signs that display the “Read Operator’s Manual” symbol are intended to direct the operator to the operator’s manual for further information regarding maintenance, adjustments, or procedures for particular areas of the machine. When a safety sign displays this symbol, refer to the appropriate page of the operator’s manual.

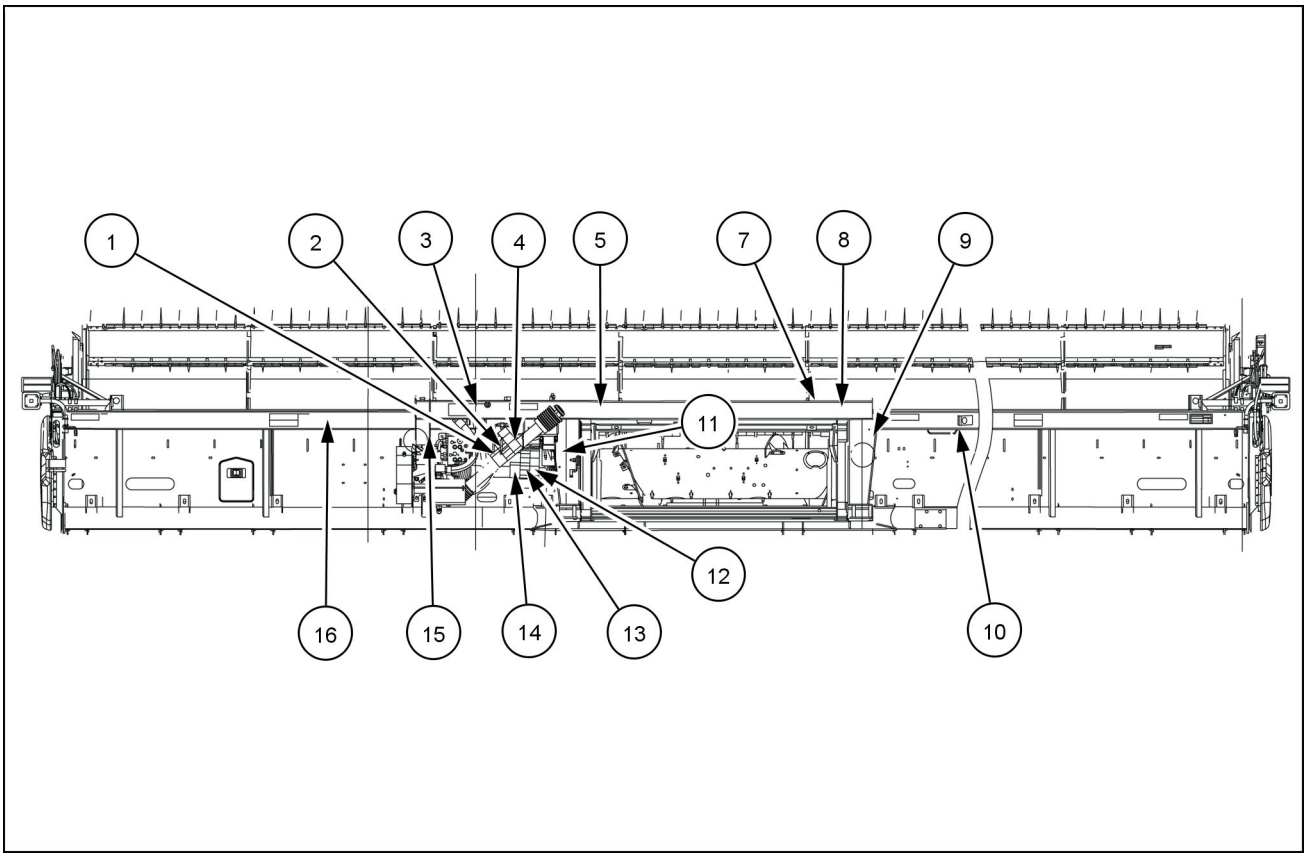

83112557 1

Rear view

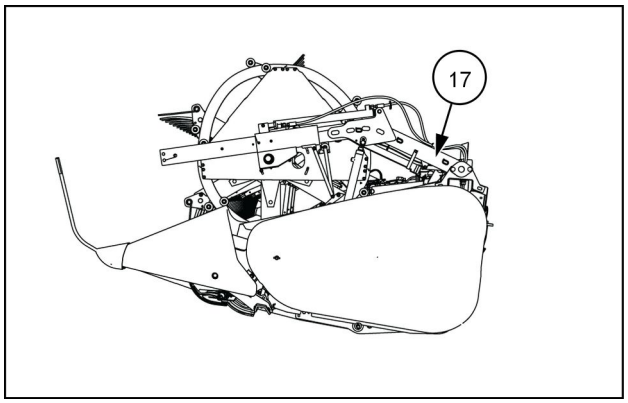

NHIL16GH00436AA 2

Left - hand side

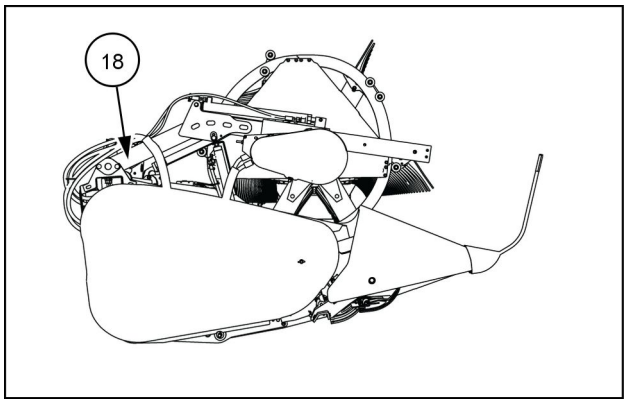

NHIL16GH00437AA 3

Right - hand side

WARNING **Slippery surface.** **Do not use this area as a step or platform.** **Failure to comply could result in death or serious injury.** **Quantity: 2** **87026533**	 87026533_B 4
(4) Left-Hand (LH) side of feeder opening on the top rail.	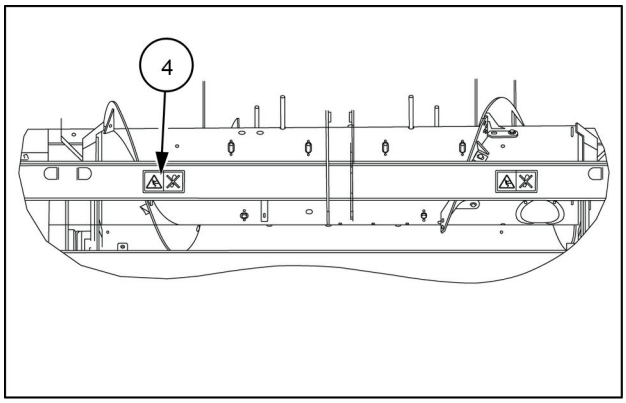 93112558 5
(7) Right-Hand (RH) side of feeder opening on the top rail.	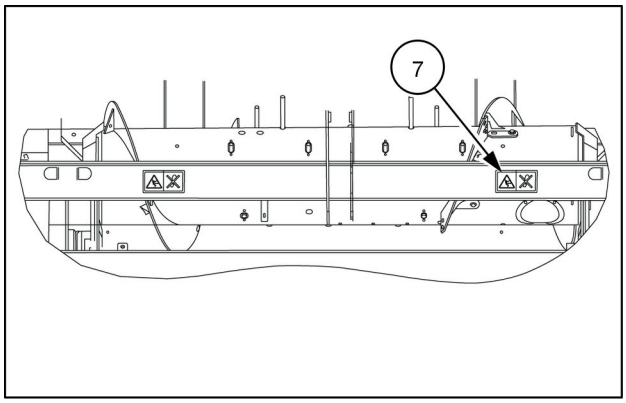 93112558 6

WARNING
Crush Hazard.
Engage safety latch before working under machine.
Failure to comply could cause death or serious injury.

Quantity: 2
84027712

87027712 7

(9) RH side feeder opening.

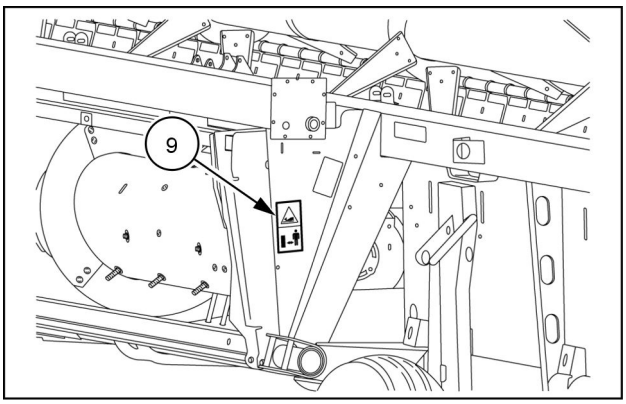

83112566 8

(11) LH side feeder opening.

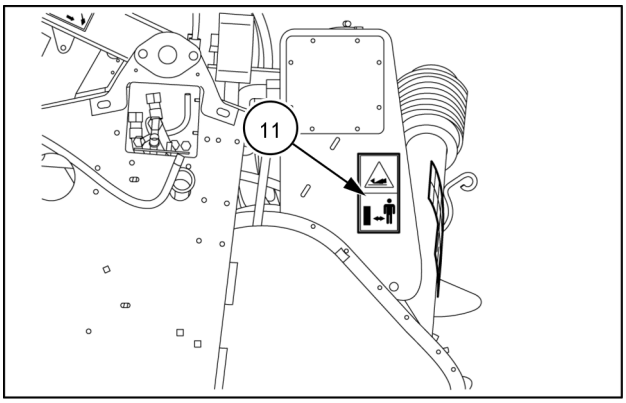

83112563 9

WARNING
Shield is missing.
Stand clear.
Replace or close shield before operating machine.
Failure to comply could cause death or serious injury.

Quantity: 1
86999254

86999254 10

(15) LH side feeder opening.

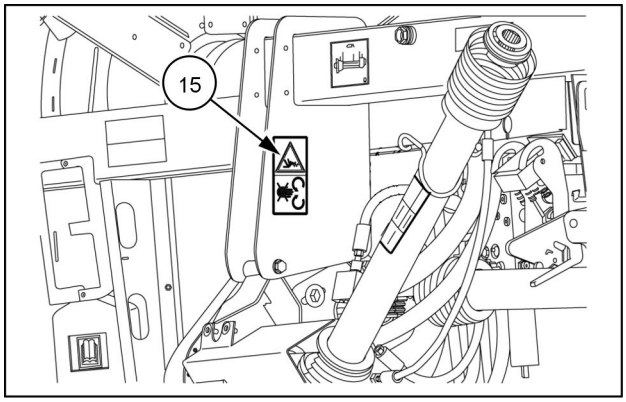

83112561 11

DANGER
Rotating drive line.
Keep all shields and guards in place.
Failure to comply will result in death or serious injury.

Quantity: 2
86520062

86520062_B 12

(2) On the Power Take-Off (PTO) PTO shaft cover.

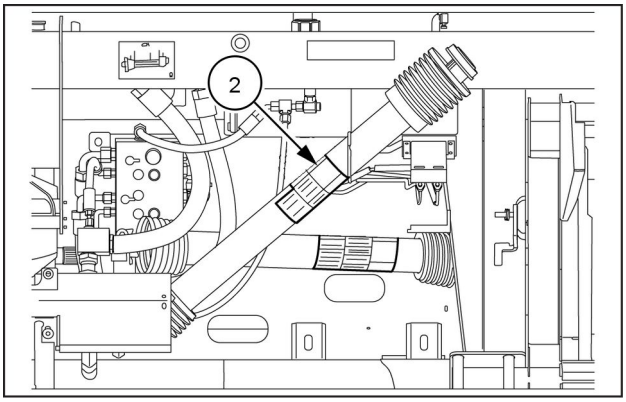

83112562 13

(12) On the PTO shaft cover.

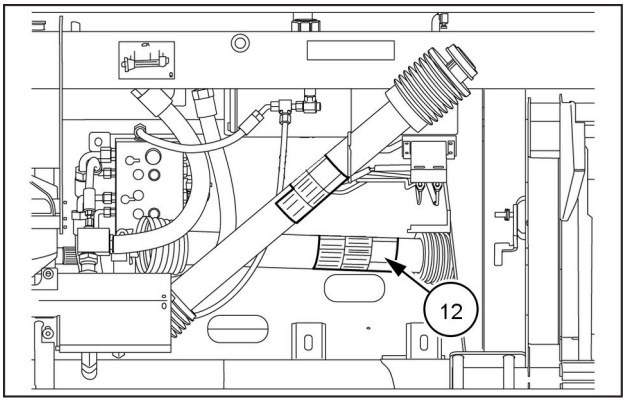

83112562 14

CAUTION
Stay clear of hot surface.
Failure to do so could result in minor or moderate injury.
Quantity: 2
84004742

84004742 15

(3) On the hydraulic reservoir.

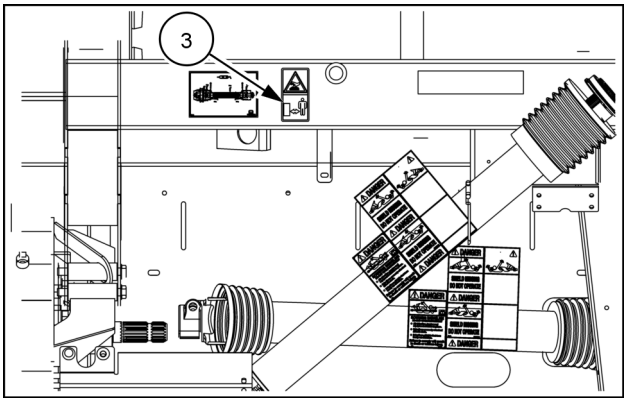

NHIL12GH00272AA 16

(8) On the hydraulic reservoir.

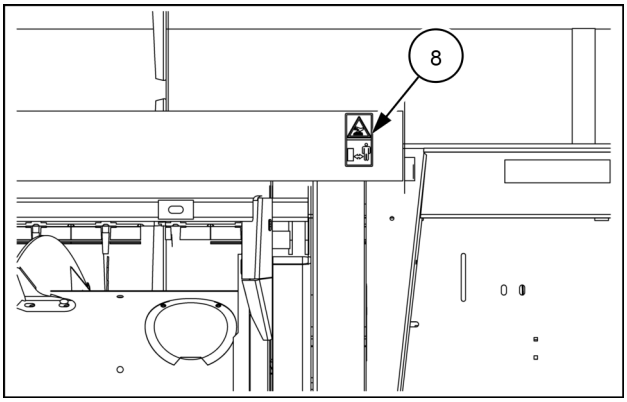

NHIL12GH00273AA 17

DANGER
Shield missing
Do not operate
Keep all shields and guards in place.
Failure to comply will result in death or serious injury.

Quantity: 2
English: 849472
French 849483
Spanish 9801256

849472_H 18

(2) On the PTO shaft under the PTO plastic cover.

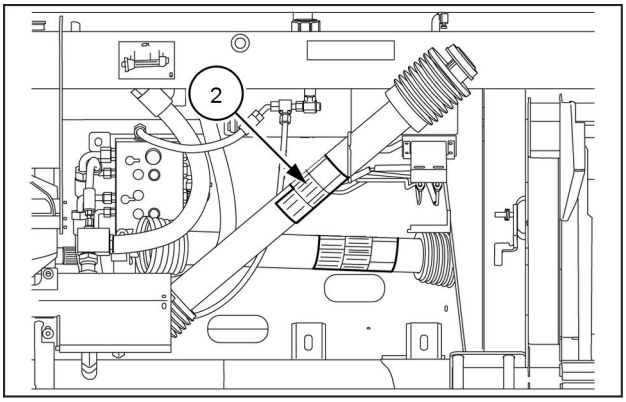

83112562 19

(13) On the PTO shaft under the PTO plastic cover.

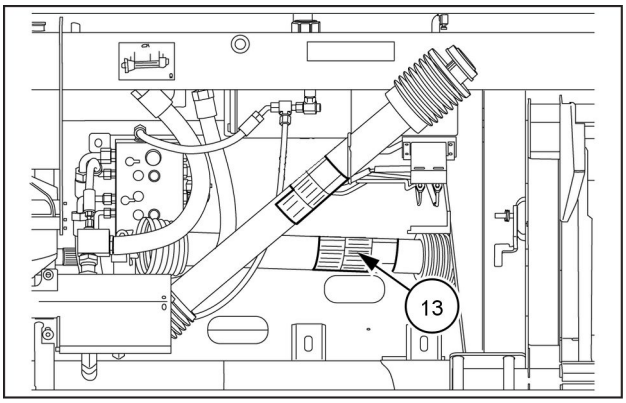

83112562 20

DANGER
Rotating drive line
Do not operate without:
All drive line, tractor and equipment shields in place.
Drive lines securely attached at both ends.
Drive line shields that turn freely on drive line.
Failure to comply will result in death or serious injury.

Quantity: 2
English: 849471
French 849482

849471_E 21

(1) On the PTO shaft plastic cover.

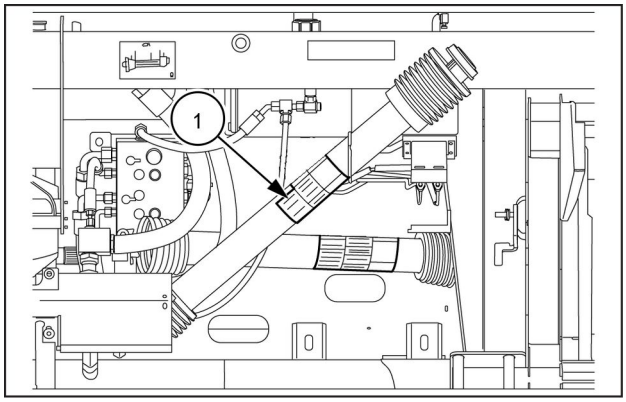

83112562 22

(14) On the PTO shaft plastic cover.

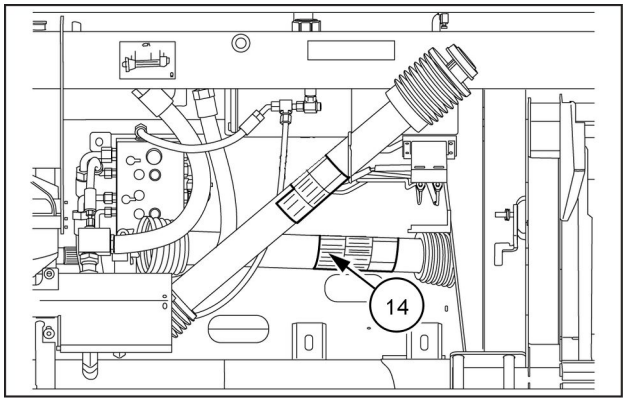

83112562 23

DANGER
Rest header on the ground or set header lift cylinder safety lock before going under unit.
Failure to comply will result in death or serious injury.

Quantity: 2 or 3 dependant on machine layout
84004735

84004735 24

(17) LH side reel arm.

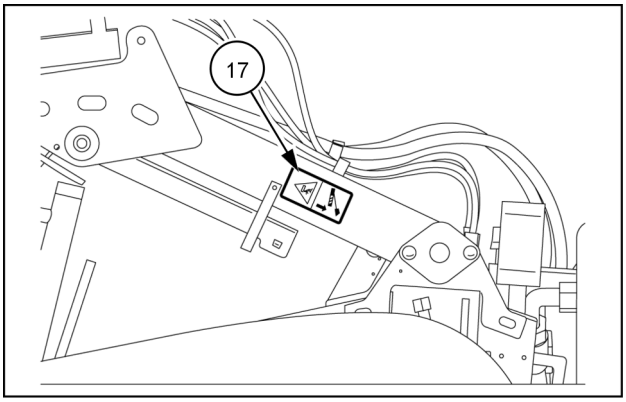

83112567 25

(18) RH side reel arm.

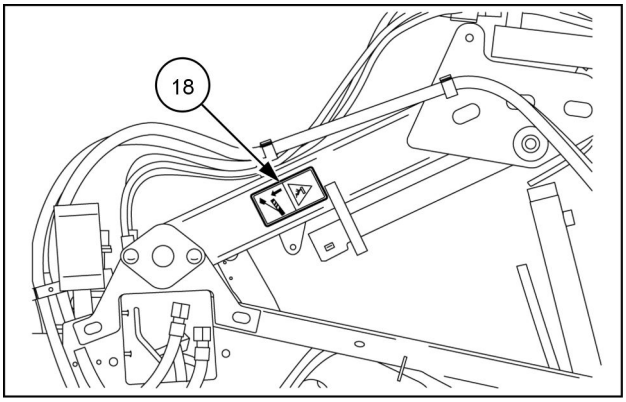

83112568 26

(6) Center reel arm – split reel equipped heads only.

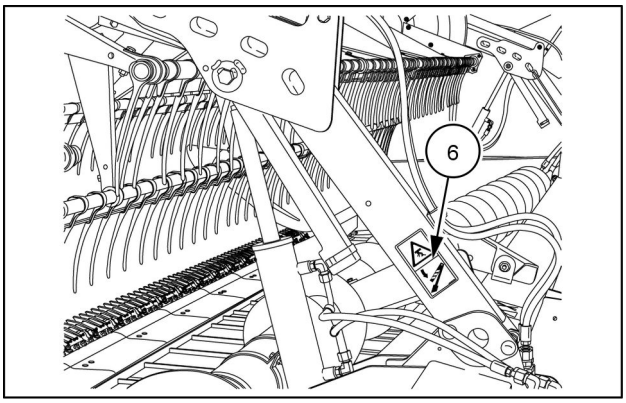

83117560 27

Warning **Shield is missing.** **Stand clear.** **Replace or close shield before operating machine.** **Failure to comply could result in death or serious injury.** **Quantity: 1** **84011345**	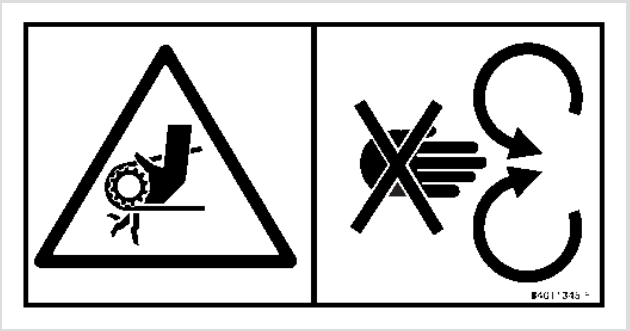 84011345 28
(19) Inside the reel drive cover.	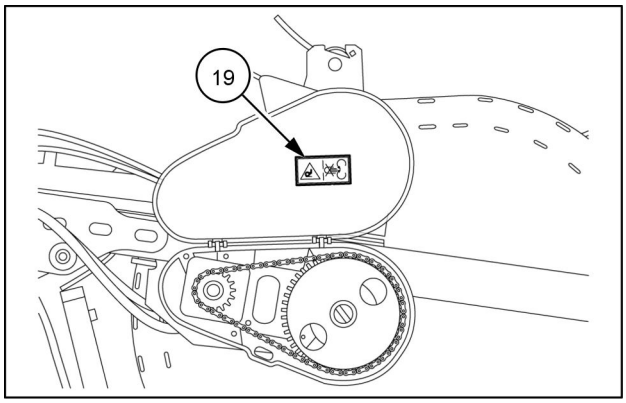 83112560 29

For machines equipped with optional upper cross auger only

DANGER
Rotating auger
Keep away while operating
Failure to comply will result in death or serious injury.

Quantity: 2
84004736

84004736_B 30

(16) LH side of the top beam outside the feeder opening.

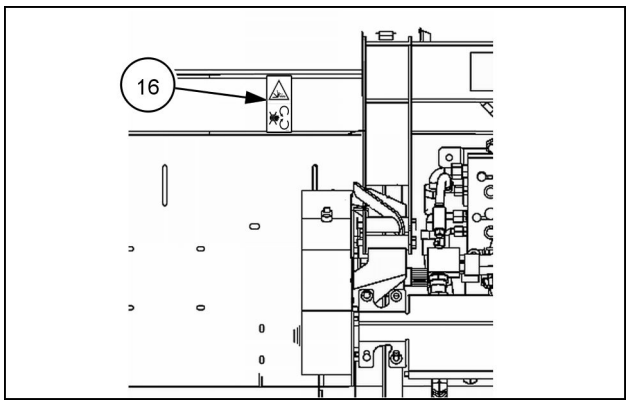

23117534 31

(10) RH side of the top beam outside the feeder opening.

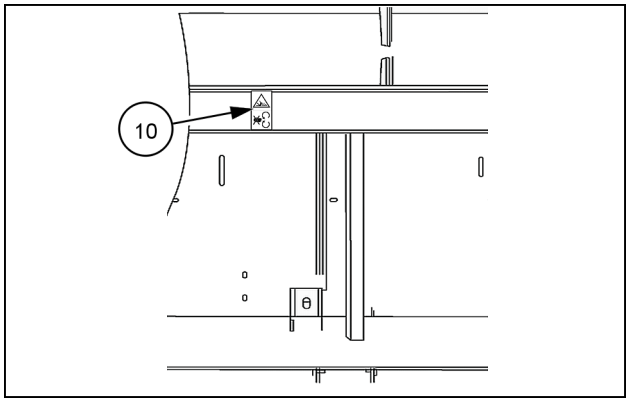

23117535 32

Torque - Minimum tightening torques for normal assembly

800C Grain Header	

METRIC NON-FLANGED HARDWARE

NOM. SIZE	CLASS 8.8 BOLT and CLASS 8 NUT		CLASS 10.9 BOLT and CLASS 10 NUT		LOCKNUT CL.8 W/CL8.8 BOLT	LOCKNUT CL.10 W/CL10.9 BOLT
	UNPLATED	PLATED W/ZnCr	UNPLATED	PLATED W/ZnCr		
M4	2.2 N·m (19 lb in)	2.9 N·m (26 lb in)	3.2 N·m (28 lb in)	4.2 N·m (37 lb in)	2 N·m (18 lb in)	2.9 N·m (26 lb in)
M5	4.5 N·m (40 lb in)	5.9 N·m (52 lb in)	6.4 N·m (57 lb in)	8.5 N·m (75 lb in)	4 N·m (36 lb in)	5.8 N·m (51 lb in)
M6	7.5 N·m (66 lb in)	10 N·m (89 lb in)	11 N·m (96 lb in)	15 N·m (128 lb in)	6.8 N·m (60 lb in)	10 N·m (89 lb in)
M8	18 N·m (163 lb in)	25 N·m (217 lb in)	26 N·m (234 lb in)	35 N·m (311 lb in)	17 N·m (151 lb in)	24 N·m (212 lb in)
M10	37 N·m (27 lb ft)	49 N·m (36 lb ft)	52 N·m (38 lb ft)	70 N·m (51 lb ft)	33 N·m (25 lb ft)	48 N·m (35 lb ft)
M12	64 N·m (47 lb ft)	85 N·m (63 lb ft)	91 N·m (67 lb ft)	121 N·m (90 lb ft)	58 N·m (43 lb ft)	83 N·m (61 lb ft)
M16	158 N·m (116 lb ft)	210 N·m (155 lb ft)	225 N·m (166 lb ft)	301 N·m (222 lb ft)	143 N·m (106 lb ft)	205 N·m (151 lb ft)
M20	319 N·m (235 lb ft)	425 N·m (313 lb ft)	440 N·m (325 lb ft)	587 N·m (433 lb ft)	290 N·m (214 lb ft)	400 N·m (295 lb ft)
M24	551 N·m (410 lb ft)	735 N·m (500 lb ft)	762 N·m (560 lb ft)	1016 N·m (750 lb ft)	501 N·m (370 lb ft)	693 N·m (510 lb ft)

NOTE: *M4 through M8 hardware torque specifications are shown in pound-inches. M10 through M24 hardware torque specifications are shown in pound-feet.*

METRIC FLANGED HARDWARE

NOM. SIZE	CLASS 8.8 BOLT and CLASS 8 NUT		CLASS 10.9 BOLT and CLASS 10 NUT		LOCKNUT CL.8 W/CL8.8 BOLT	LOCKNUT CL.10 W/CL10.9 BOLT
	UNPLATED	PLATED W/ZnCr	UNPLATED	PLATED W/ZnCr		
M4	2.4 N·m (21 lb in)	3.2 N·m (28 lb in)	3.5 N·m (31 lb in)	4.6 N·m (41 lb in)	2.2 N·m (19 lb in)	3.1 N·m (27 lb in)
M5	4.9 N·m (43 lb in)	6.5 N·m (58 lb in)	7.0 N·m (62 lb in)	9.4 N·m (83 lb in)	4.4 N·m (39 lb in)	6.4 N·m (57 lb in)
M6	8.3 N·m (73 lb in)	11 N·m (96 lb in)	12 N·m (105 lb in)	16 N·m (141 lb in)	7.5 N·m (66 lb in)	11 N·m (96 lb in)
M8	20 N·m (179 lb in)	27 N·m (240 lb in)	29 N·m (257 lb in)	39 N·m (343 lb in)	18 N·m (163 lb in)	27 N·m (240 lb in)
M10	40 N·m (30 lb ft)	54 N·m (40 lb ft)	57 N·m (42 lb ft)	77 N·m (56 lb ft)	37 N·m (27 lb ft)	53 N·m (39 lb ft)
M12	70 N·m (52 lb ft)	93 N·m (69 lb ft)	100 N·m (74 lb ft)	134 N·m (98 lb ft)	63 N·m (47 lb ft)	91 N·m (67 lb ft)
M16	174 N·m (128 lb ft)	231 N·m (171 lb ft)	248 N·m (183 lb ft)	331 N·m (244 lb ft)	158 N·m (116 lb ft)	226 N·m (167 lb ft)
M20	350 N·m (259 lb ft)	467 N·m (345 lb ft)	484 N·m (357 lb ft)	645 N·m (476 lb ft)	318 N·m (235 lb ft)	440 N·m (325 lb ft)
M24	607 N·m (447 lb ft)	809 N·m (597 lb ft)	838 N·m (618 lb ft)	1118 N·m (824 lb ft)	552 N·m (407 lb ft)	

IDENTIFICATION

Metric Hex head and carriage bolts, classes 5.6 and up

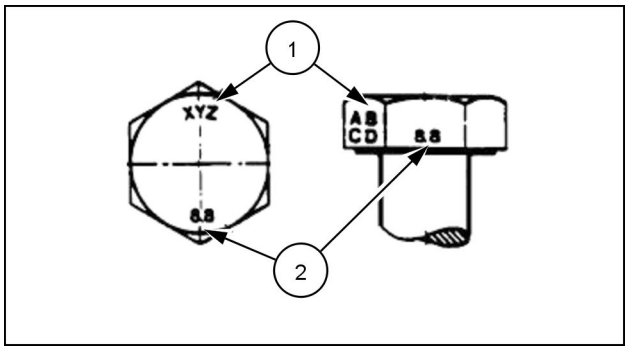

20083680 1

1. Manufacturer's Identification
2. Property Class

Metric Hex nuts and locknuts, classes 05 and up

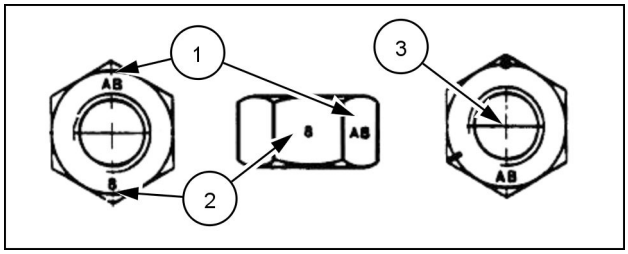

20083681 2

1. Manufacturer's Identification
2. Property Class
3. Clock Marking of Property Class and Manufacturer's Identification (Optional), i.e. marks **60°** apart indicate Class 10 properties, and marks **120°** apart indicate Class 8.

INCH NON-FLANGED HARDWARE

NOMINAL SIZE	SAE GRADE 5 BOLT and NUT		SAE GRADE 8 BOLT and NUT		LOCKNUT GrB W/ Gr5 BOLT	LOCKNUT GrC W/ Gr8 BOLT
	UN-PLATED or PLATED SILVER	PLATED W/ZnCr GOLD	UN-PLATED or PLATED SILVER	PLATED W/ZnCr GOLD		
1/4	**8 N·m (71 lb in)**	**11 N·m (97 lb in)**	**12 N·m (106 lb in)**	**16 N·m (142 lb in)**	**8.5 N·m (75 lb in)**	**12.2 N·m (109 lb in)**
5/16	**17 N·m (150 lb in)**	**23 N·m (204 lb in)**	**24 N·m (212 lb in)**	**32 N·m (283 lb in)**	**17.5 N·m (155 lb in)**	**25 N·m (220 lb in)**
3/8	**30 N·m (22 lb ft)**	**40 N·m (30 lb ft)**	**43 N·m (31 lb ft)**	**57 N·m (42 lb ft)**	**31 N·m (23 lb ft)**	**44 N·m (33 lb ft)**
7/16	**48 N·m (36 lb ft)**	**65 N·m (48 lb ft)**	**68 N·m (50 lb ft)**	**91 N·m (67 lb ft)**	**50 N·m (37 lb ft)**	**71 N·m (53 lb ft)**
1/2	**74 N·m (54 lb ft)**	**98 N·m (73 lb ft)**	**104 N·m (77 lb ft)**	**139 N·m (103 lb ft)**	**76 N·m (56 lb ft)**	**108 N·m (80 lb ft)**
9/16	**107 N·m (79 lb ft)**	**142 N·m (105 lb ft)**	**150 N·m (111 lb ft)**	**201 N·m (148 lb ft)**	**111 N·m (82 lb ft)**	**156 N·m (115 lb ft)**
5/8	**147 N·m (108 lb ft)**	**196 N·m (145 lb ft)**	**208 N·m (153 lb ft)**	**277 N·m (204 lb ft)**	**153 N·m (113 lb ft)**	**215 N·m (159 lb ft)**
3/4	**261 N·m (193 lb ft)**	**348 N·m (257 lb ft)**	**369 N·m (272 lb ft)**	**491 N·m (362 lb ft)**	**271 N·m (200 lb ft)**	**383 N·m (282 lb ft)**
7/8	**420 N·m (310 lb ft)**	**561 N·m (413 lb ft)**	**594 N·m (438 lb ft)**	**791 N·m (584 lb ft)**	**437 N·m (323 lb ft)**	**617 N·m (455 lb ft)**
1	**630 N·m (465 lb ft)**	**841 N·m (620 lb ft)**	**890 N·m (656 lb ft)**	**1187 N·m (875 lb ft)**	**654 N·m (483 lb ft)**	**924 N·m (681 lb ft)**

NOTE: *For Imperial Units,* ***1/4 in*** *and* ***5/16 in*** *hardware torque specifications are shown in pound-inches.* ***3/8 in*** *through* ***1 in*** *hardware torque specifications are shown in pound-feet.*

INCH FLANGED HARDWARE

NOM-INAL SIZE	SAE GRADE 5 BOLT and NUT		SAE GRADE 8 BOLT and NUT		LOCKNUT GrF W/ Gr5 BOLT	LOCKNUT GrG W/ Gr8 BOLT
	UNPLATED or PLATED SILVER	PLATED W/ZnCr GOLD	UNPLATED or PLATED SILVER	PLATED W/ZnCr GOLD		
1/4	9 N·m (80 lb in)	12 N·m (106 lb in)	13 N·m (115 lb in)	17 N·m (150 lb in)	8 N·m (71 lb in)	12 N·m (106 lb in)
5/16	19 N·m (168 lb in)	25 N·m (221 lb in)	26 N·m (230 lb in)	35 N·m (310 lb in)	17 N·m (150 lb in)	24 N·m (212 lb in)
3/8	33 N·m (25 lb ft)	44 N·m (33 lb ft)	47 N·m (35 lb ft)	63 N·m (46 lb ft)	30 N·m (22 lb ft)	43 N·m (32 lb ft)
7/16	53 N·m (39 lb ft)	71 N·m (52 lb ft)	75 N·m (55 lb ft)	100 N·m (74 lb ft)	48 N·m (35 lb ft)	68 N·m (50 lb ft)
1/2	81 N·m (60 lb ft)	108 N·m (80 lb ft)	115 N·m (85 lb ft)	153 N·m (113 lb ft)	74 N·m (55 lb ft)	104 N·m (77 lb ft)
9/16	117 N·m (86 lb ft)	156 N·m (115 lb ft)	165 N·m (122 lb ft)	221 N·m (163 lb ft)	106 N·m (78 lb ft)	157 N·m (116 lb ft)
5/8	162 N·m (119 lb ft)	216 N·m (159 lb ft)	228 N·m (168 lb ft)	304 N·m (225 lb ft)	147 N·m (108 lb ft)	207 N·m (153 lb ft)
3/4	287 N·m (212 lb ft)	383 N·m (282 lb ft)	405 N·m (299 lb ft)	541 N·m (399 lb ft)	261 N·m (193 lb ft)	369 N·m (272 lb ft)
7/8	462 N·m (341 lb ft)	617 N·m (455 lb ft)	653 N·m (482 lb ft)	871 N·m (642 lb ft)	421 N·m (311 lb ft)	594 N·m (438 lb ft)
1	693 N·m (512 lb ft)	925 N·m (682 lb ft)	979 N·m (722 lb ft)	1305 N·m (963 lb ft)	631 N·m (465 lb ft)	890 N·m (656 lb ft)

IDENTIFICATION

Inch Bolts and free-spinning nuts

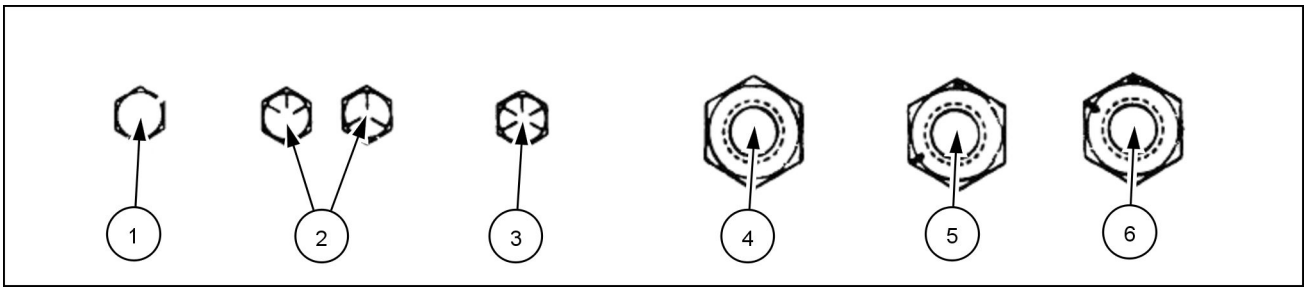

20083682 3

Grade Marking Examples

SAE Grade Identification			
1	Grade 2 - No Marks	4	Grade 2 Nut - No Marks
2	Grade 5 - Three Marks	5	Grade 5 Nut - Marks **120°** Apart
3	Grade 8 - Five Marks	6	Grade 8 Nut - Marks **60°** Apart

Product: New Holland 840CD\880CF Draper Header Service Repair Manual
Full Download: https://www.arepairmanual.com/downloads/new-holland-840cd880cf-draper-header-service-repair-manual/

Inch Lock Nuts, All Metal (Three optional methods)

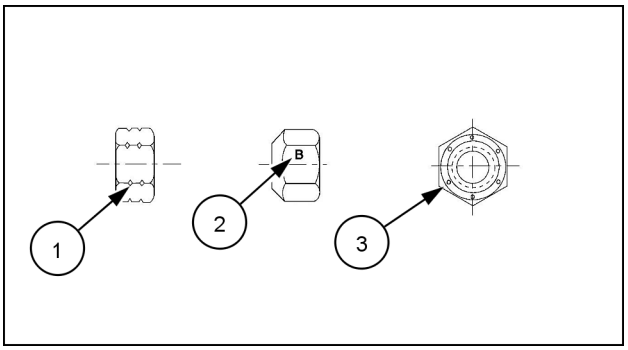

20090268 4

Grade Identification

Grade	Corner Marking Method (1)	Flats Marking Method (2)	Clock Marking Method (3)
Grade A	No Notches	No Mark	No Marks
Grade B	One Circumferential Notch	Letter B	Three Marks
Grade C	Two Circumferential Notches	Letter C	Six Marks

Sample of manual. Download All 527 pages at:
https://www.arepairmanual.com/downloads/new-holland-840cd880cf-draper-header-service-repair-manual/