Product: New Holland Speedrower? 130 Self-Propelled Windrower Service Repair Manual(Part number 47904535)
Full Download: https://www.arepairmanual.com/downloads/new-holland-speedrower-130-self-propelled-windrower-service-repair-manualpart-number-47904535/

SERVICE MANUAL

Speedrower® 130
Tier 3
Self-Propelled Windrower

PIN YEG675001 and above

Part number 47904535
1st edition English
July 2015

Sample of manual. Download All 2636 pages at:
https://www.arepairmanual.com/downloads/new-holland-speedrower-130-self-propelled-windrower-service-repair-manualpart-n

Product: New Holland Speedrower? 130 Self-Propelled Windrower Service Repair Manual(Part number 47904535)
Full Download: https://www.arepairmanual.com/downloads/new-holland-speedrower-130-self-propelled-windrower-service-repair-manualpart-number-47904535/

Link Product / Engine

Product	Market Product	Engine
Speedrower® 130 [YEG675001 -]	North America	F4GE9484

Sample of manual. Download All 2636 pages at:
https://www.arepairmanual.com/downloads/new-holland-speedrower-130-self-propelled-windrower-service-repair-manualpa

Contents

INTRODUCTION

Engine 10

[10.001] Engine and crankcase 10.1

[10.202] Air cleaners and lines 10.2

[10.206] Fuel filters 10.3

[10.216] Fuel tanks 10.4

[10.218] Fuel injection system 10.5

[10.250] Turbocharger and lines 10.6

[10.254] Intake and exhaust manifolds and muffler 10.7

[10.400] Engine cooling system 10.8

[10.414] Fan and drive 10.9

Front axle system 25

[25.310] Final drives 25.1

Rear axle system 27

[27.550] Non-powered rear axle 27.1

Hydrostatic drive 29

[29.100] Transmission and steering hydrostatic control 29.1

[29.202] Hydrostatic transmission 29.2

[29.218] Pump and motor components 29.3

Brakes and controls 33

[33.110] Parking brake or parking lock 33.1

Hydraulic systems 35

[35.000] Hydraulic systems 35.1

[35.100] Main lift system 35.2

[35.105] Charge pump 35.3

[35.220] Auxiliary hydraulic pump and lines 35.4

[35.300] Reservoir, cooler, and filters 35.5
[35.304] Combination pump units 35.6
[35.410] Header or attachment height system 35.7
[35.415] Header or attachment tilting system 35.8
[35.760] Header reverser drive 35.9
[35.910] Head and header hydraulic drive 35.10
Steering 41
[41.101] Steering control 41.1
Cab climate control 50
[50.200] Air conditioning 50.1
Electrical systems 55
[55.000] Electrical system 55.1
[55.019] Hydrostatic drive control system 55.2
[55.050] Heating, Ventilation, and Air-Conditioning (HVAC) control system 55.3
[55.100] Harnesses and connectors 55.4
[55.640] Electronic modules 55.5
[55.DTC] FAULT CODES 55.6
Platform, cab, bodywork, and decals 90
[90.124] Pneumatically-adjusted operator seat 90.1
[90.150] Cab 90.2
[90.151] Cab interior 90.3
[90.154] Cab doors and hatches 90.4

INTRODUCTION

Contents

INTRODUCTION

Foreword - Important notice regarding equipment servicing (*) 3
Foreword - Note to the dealer 4
Safety rules 5
Safety rules (*) 6
Personal safety - Emergency exit (*) 15
Personal safety - Hydraulic system safety 16
Personal safety - Maintenance safety (*) 17
Safety rules - Ecology and the environment (*) 18
Personal safety - Do not operate tag (*) 19
Torque - Minimum tightening torques for normal assembly (*) 20
Torque - Standard torque data for hydraulics (*) 24
Basic instructions - Shop and assembly (*) 26
Hydraulic contamination 28
Capacities 29
Maintenance chart - Recommended operating temperature range 30
General specification 31
Product identification - Product Identification Number (PIN) 35
Part identification - Engine serial number 36
Product identification - Machine orientation 37

(*) See content for specific models

Foreword - Important notice regarding equipment servicing

Speedrower® 130	NA Draper ready - Factory-fitted to accept draper

All repair and maintenance work listed in this manual must be carried out only by qualified dealership personnel, strictly complying with the instructions given, and using, whenever possible, the special tools.

Anyone who performs repair and maintenance operations without complying with the procedures provided herein shall be responsible for any subsequent damages.

The manufacturer and all the organizations of its distribution chain, including - without limitation - national, regional, or local dealers, reject any responsibility for damages caused by parts and/or components not approved by the manufacturer, including those used for the servicing or repair of the product manufactured or marketed by the manufacturer. In any case, no warranty is given or attributed on the product manufactured or marketed by the manufacturer in case of damages caused by parts and/or components not approved by the manufacturer.

The manufacturer reserves the right to make improvements in design and changes in specifications at any time without notice and without incurring any obligation to install them on units previously sold. Specifications, descriptions, and illustrative material herein are as accurate as known at time of publication but are subject to change without notice.

In case of questions, refer to your NEW HOLLAND Sales and Service Networks.

Foreword - Note to the dealer

Company policy

Company policy, which is one of continuous improvement, reserves the right to make changes in design and specifications at any time without notice and without obligation to modify units previously built.

All data given in this book is subject to production variations. Dimensions and weights are approximate only and the illustrations do not necessarily show windrowers in standard condition.

Parts and accessories

Genuine NEW HOLLAND parts and accessories have been specifically designed for NEW HOLLAND MACHINES.

We would like to point out those "NON-GENUINE" parts and accessories have not been examined and released by NEW HOLLAND. The installation and or use of such products could have negative effects upon the design characteristics of your machine and thereby affect its safety. NEW HOLLAND is not liable for any damage caused by the use of "NON-GENUINE" NEW HOLLAND parts and accessories.

Lubrication

Adequate lubrication and maintenance on a regular schedule is vital to maintaining your equipment. To ensure long service and efficient operation, follow the lubrication and maintenance schedules outlined in this manual. The use of proper fuels, oils, grease and filters, as well as keeping the systems clean, will also extend machine and component life.

NOTICE: *Always use genuine NEW HOLLAND replacement parts, oils and filters to ensure proper operation, filtration of engine and hydraulic systems. See your NEW HOLLAND dealer for additional oil quantities.*

Safety rules

Personal safety

This is the safety alert symbol. It is used to alert you to potential personal injury hazards. Obey all safety messages that follow this symbol to avoid possible death or injury.

Throughout this manual you will find the signal words DANGER, WARNING, and CAUTION followed by special instructions. These precautions are intended for the personal safety of you and those working with you.

Read and understand all the safety messages in this manual before you operate or service the machine.

⚠ DANGER indicates a hazardous situation that, if not avoided, will result in death or serious injury.

⚠ WARNING indicates a hazardous situation that, if not avoided, could result in death or serious injury.

⚠ CAUTION indicates a hazardous situation that, if not avoided, could result in minor or moderate injury.

FAILURE TO FOLLOW DANGER, WARNING, AND CAUTION MESSAGES COULD RESULT IN DEATH OR SERIOUS INJURY.

Machine safety

NOTICE: *Notice indicates a situation that, if not avoided, could result in machine or property damage.*

Throughout this manual you will find the signal word Notice followed by special instructions to prevent machine or property damage. The word Notice is used to address practices not related to personal safety.

Information

NOTE: *Note indicates additional information that clarifies steps, procedures, or other information in this manual.*

Throughout this manual you will find the word Note followed by additional information about a step, procedure, or other information in the manual. The word Note is not intended to address personal safety or property damage.

Safety rules

Speedrower® 130	NA

General safety rules

Use caution when operating the machine on slopes. Raised equipment, full tanks and other loads will change the center of gravity of the machine. The machine can tip or roll over when near ditches and embankments or uneven surfaces.

- Only skilled operators who are familiar with all the controls and harvesting techniques should use the equipment. It is recommended to operate on cultivated land with slopes no greater than **26 %** (**15 °**) uphill and downhill.
- If necessary, when driving downhill change into a lower gear before starting the descent. Machine must be stopped to downshift into a lower gear.

Never permit anyone other than the operator to ride on the machine.

Never operate the machine under the influence of alcohol, drugs, or while otherwise impaired.

Pay attention to overhead power lines and hanging obstacles. High voltage lines may require significant clearance for safety.

Hydraulic oil or diesel fuel leaking under pressure can penetrate the skin, causing serious injury or infection.

- DO NOT use your hand to check for leaks. Use a piece of cardboard or paper.
- Stop engine, remove key and relieve the pressure before connecting or disconnecting fluid lines.
- Make sure all components are in good condition and tighten all connections before starting the engine or pressurizing the system.
- If hydraulic fluid or diesel fuel penetrates the skin, seek medical attention immediately.
- Continuous long term contact with hydraulic fluid may cause skin cancer. Avoid long term contact and wash the skin promptly with soap and water.

Keep clear of moving parts. Loose clothing, jewelry, watches, long hair, and other loose or hanging items can become entangled in moving parts.

Wear protective equipment when appropriate.

DO NOT attempt to remove material from any part of the machine while it is being operated or components are in motion.

Make sure all guards and shields are in good condition and properly installed before operating the machine. Never operate the machine with shields removed. Always close access doors or panels before operating the machine.

Dirty or slippery steps, ladders, walkways, and platforms can cause falls. Make sure these surfaces remain clean and clear of debris.

A person or pet within the operating area of a machine can be struck or crushed by the machine or its equipment. DO NOT allow anyone to enter the work area.

Raised equipment and/or loads can fall unexpectedly and crush persons underneath. Never allow anyone to enter the area underneath raised equipment during operation.

Never operate engine in enclosed spaces as harmful exhaust gases may build up.

Before starting the machine, be sure that all controls are in neutral or park lock position.

Start the engine only from the operator’s seat. If the safety start switch is bypassed, the engine can start with the transmission in gear. Do not connect or short across terminals on the starter solenoid. Attach jumper cables as described in the manual. Starting in gear may cause death or serious injury.

Always keep windows, mirrors, all lighting, and Slow Moving Vehicle (SMV) emblem clean to provide the best possible visibility while operating the machine.

Operate controls only when seated in the operator's seat, except for those controls expressly intended for use from other locations.

Before leaving the machine:

1. Park machine on a firm level surface.
2. Put all controls in neutral or park lock position.
3. Engage park brake, use wheel chocks if required.
4. Lower all hydraulic equipment — Implements, header, etc.
5. Turn off engine and remove key.

When, due to exceptional circumstances, you would decide to keep the engine running after leaving the operator's station, then the following precautions must be followed:

1. Bring the engine to low idle speed.
2. Disengage all drive systems.
3. **⚠ WARNING**

   Some components may continue to run down after disengaging drive systems.
   Make sure all drive systems are fully disengaged.
   Failure to comply could result in death or serious injury.

   W0113A

   Shift the transmission into neutral.
4. Apply the parking brake.

⚠ General maintenance safety ⚠

Keep area used for servicing the machine clean and dry. Clean up spilled fluids.

Service machine on a firm level surface.

Install guards and shields after servicing the machine.

Close all access doors and install all panels after servicing the machine.

Do not attempt to clean, lubricate, clear obstructions or make adjustments to the machine while it is in motion or while the engine is running.

Always make sure working area is clear of tools, parts, other persons and pets before you start operating the machine.

Unsupported hydraulic cylinders can lose pressure and drop the equipment causing a crushing hazard. Do not leave equipment in a raised position while parked or during service, unless securely supported.

Jack or lift the machine only at jack or lift points indicated in this manual.

Incorrect towing procedures can cause accidents. When towing a disabled machine follow the procedure in this manual. Use only rigid tow bars.

Stop the engine, remove key and relieve pressure before disconnecting or connecting fluid lines.

Stop the engine and remove key before disconnecting or connecting electrical connections.

Scalding can result from incorrect removal of coolant caps. Cooling system operates under pressure. Hot coolant can spray out if a cap is removed while the system is hot. Allow system to cool before removing cap. When removing a cap turn it slowly to allow pressure to escape before completely removing the cap.

Replace damaged or worn tubes, hoses, electrical wiring, etc.

Engine, transmission, exhaust components, and hydraulic lines may become hot during operation. Take care when servicing such components. Allow surfaces to cool before handling or disconnecting hot components. Wear protective equipment when appropriate.

When welding, follow this instructions in the manual. Always disconnect the battery before welding on the machine. Always wash your hands after handling battery components.

⚠ Wheels and tires ⚠

Make sure tires are correctly inflated. Do not exceed recommended load or pressure. Follow instructions in the manual for proper tire inflation.

Tires are heavy. Handling tires without proper equipment could cause death or serious injury.

Always have a qualified tire technician service the tires and wheels. If a tire has lost all pressure, take the tire and wheel to a tire shop or your dealer for service. Explosive separation of the tire can cause serious injury.

DO NOT weld to a wheel or rim until the tire is completely removed. Inflated tires can generate a gas mixture with the air than can be ignited by high temperatures from welding procedures performed on the wheel or rim. Removing the air or loosening the tire on the rim (breaking the bead) will NOT eliminate the hazard. This condition can exist whether tires are inflated or deflated. The tire MUST be completely removed from the wheel or rim prior to welding the wheel or rim.

⚠ Driving on public roads and general transportation safety ⚠

Comply with local laws and regulations.

Use appropriate lighting to meet local regulations.

Make sure SMV emblem is visible.

Lift implements and attachments high enough above ground to prevent accidental contact with road.

When transporting equipment or machine on a transport trailer, make sure it is properly secured. Be sure the SMV emblem on the equipment or machine is covered while being transported on a trailer.

Be aware of overhead structures or power lines and make sure the machine and/or attachments can pass safely under.

Travel speed should be such that complete control and machine stability is maintained at all times.

Slow down and signal before turning.

Pull over to allow faster traffic to pass.

Follow correct towing procedure for equipment with or without brakes.

⚠ Fire and explosion prevention ⚠

Fuel or oil leaked or spills on hot surfaces or electrical components can cause a fire.

Crop materials, trash, debris, bird nests, or flammable material can ignite on hot surfaces.

Always have a fire extinguisher on or near the machine.

At least once each day and at the end of the day remove all trash and debris from the machine especially around hot components such as engine, transmission, exhaust, battery, etc. More frequent cleaning of your machine may be necessary depending on the operating environment and conditions.

At least once each day, remove debris accumulation around moving components such as bearings, pulleys, belts, gears, cleaning fan, etc. More frequent cleaning of your machine may be necessary depending on the operating environment and conditions.

Inspect the electrical system for loose connections or frayed insulation. Repair or replace loose or damaged parts.

Do not store oily rags or other flammable material on the machine.

Do not weld or flame cut any items that contain flammable material. Clean items thoroughly with non-flammable solvents before welding or flame-cutting.

Do not expose the machine to flames, burning brush, or explosives.

Promptly investigate any unusual smells or odors that may occur during operation of the machine.

General battery safety

Always wear eye protection when working with batteries.

Do not create sparks or have open flame near battery.

Ventilate when charging or using in an enclosed area.

Disconnect negative (-) first and reconnect negative (-) last.

When welding on the machine, disconnect both terminals of the battery.

Do not weld, grind, or smoke near a battery.

When using auxiliary batteries or connecting jumper cables to start the engine, use the procedure shown in the operator's manual. Do not short across terminals.

Follow manufacturer's instructions when storing and handling batteries.

Battery post, terminals, and related accessories contain lead and lead compounds. Wash hands after handling. This is a California Proposition 65 warning.

Battery acid causes burns. Batteries contain sulfuric acid. Avoid contact with skin, eyes, or clothing. Antidote (external): Flush with water. Antidote (eyes): flush with water for 15 minutes and seek medical attention immediately. Antidote (internal): Drink large quantities of water or milk. Do not induce vomiting. Seek medical attention immediately.

Keep out of reach of children and other unauthorized persons.

Instructional seat safety

Passengers are not permitted to ride on the machine.

The instructional seat is to be used only when training a new operator or when a service technician is diagnosing a problem.

When required for the purposes of training or diagnostics, only one person may accompany the operator and that person must be seated in the instructional seat.

When the instructional seat is occupied, the following precautions must be followed:

- Machine should be driven only at slow speeds and over level ground.
- Avoid driving on highways or public roads.
- Avoid quick starts or stops.
- Avoid sharp turns.
- Always wear correctly adjusted seat belts.
- Keep door closed at all times.

⚠ Operator presence system ⚠

Your machine is equipped with an operator presence system to prevent the use of some features while the operator is not in the operator's seat.

The operator presence system should never be disconnected or bypassed.

If the system is inoperable, the system must be repaired.

⚠ Power Take-Off (PTO) ⚠

PTO-driven machinery can cause death or serious injury. Before working on or near the PTO shaft or servicing or clearing the driven machine, put the PTO switch in the disengage position, stop the engine, and remove the key.

Whenever a PTO is in operation, all guards must be in place to prevent death or injury to the operator or bystanders.

⚠ Reflectors and warning lights ⚠

Reflectors are located on the handrails in the areas as shown in Figure **1**.

Flashing amber warning lights must be used when operating on public roads.

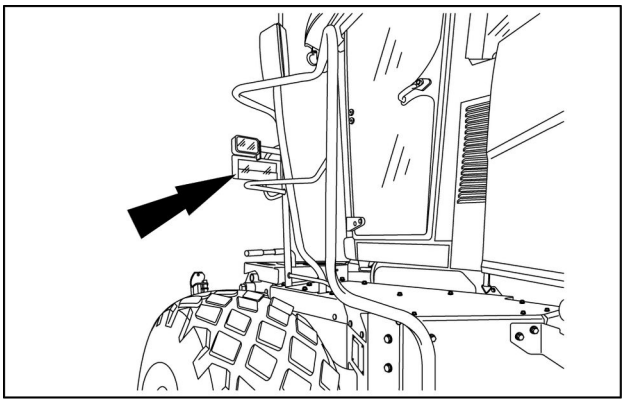

NHIL14WR00278AA 1

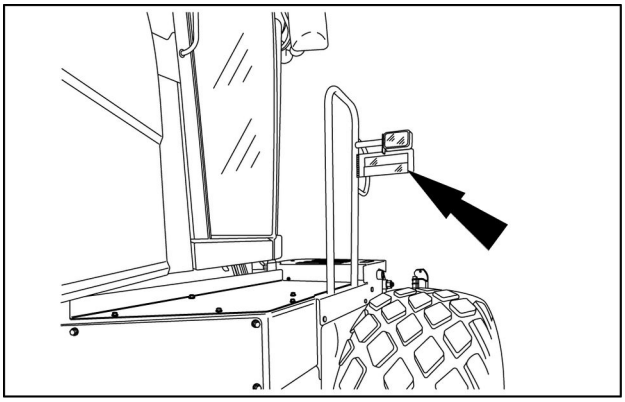

NHIL14WR00279AA 2

Seat belts

Seat belts must be worn at all times.

Seat belt inspection and maintenance:

- Keep seat belts in good condition.
- Keep sharp edges and items than can cause damage away from the belts.
- Periodically check belts, buckles, retractors, tethers, slack take-up system, and mounting bolts for damage and wear.
- Replace all parts that have damage or wear.
- Replace belts that have cuts that can make the belt weak.
- Check that bolts are tight on the seat bracket or mounting.
- If belt is attached to seat, make sure seat or seat brackets are mounted securely.
- Keep seat belts clean and dry.
- Clean belts only with soap solution and warm water.
- Do not use bleach or dye on the belts because this can make the belts weak.

To fasten the belt, pull it from the reel and push the tongue end **(3)** into the buckle end **(2)** until a "click" indicates it is fully engaged.

To release the belt, push the red release button **(1)** on the buckle and pull the tongue from the buckle.

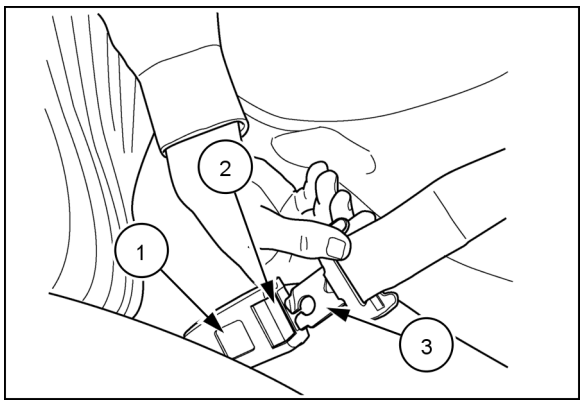

10041220 3

Air-conditioning system

The air-conditioning system is under high pressure. Do not disconnect any lines. The release of high pressure can cause serious injury.

The air-conditioning system contains gases that are harmful to the environment when released into the atmosphere. Do not attempt to service or repair the system.

Service, repair, or recharging must be performed only by a trained service technician.

Personal Protective Equipment (PPE)

Wear Personal Protective Equipment (PPE) such as hard hat, eye protection, heavy gloves, hearing protection, protective clothing, etc.

⚠ Do Not Operate tag ⚠

Before you start servicing the machine, attach a ‘Do Not Operate’ warning tag to the machine in an area that will be visible.

⚠ Hazardous chemicals ⚠

If you are exposed to or come in contact with hazardous chemicals you can be seriously injured. The fluids, lubricants, paints, adhesives, coolant, etc. required for the function of your machine can be hazardous. They may be attractive and harmful to domestic animals as well as humans.

Material Safety Data Sheets (MSDS) provide information about the chemical substances within a product, safe handling and storage procedures, first aid measures and procedures to be taken in the event of a spill or accidental release. MSDS are available from your dealer.

Before you service your machine, check the MSDS for each lubricant, fluid, etc. used in this machine. This information indicates the associated risks and will help you service the machine safely. Follow the information in the MSDS, on manufacturer containers, as well as the information in this manual when servicing the machine.

Dispose of all fluids, filters, and containers in an environmentally safe manner according to local laws and regulations. Check with local environmental and recycling centers or your dealer for correct disposal information.

Store fluids and filters in accordance with local laws and regulations. Use only appropriate containers for the storage of chemicals or petrochemical substances.

Keep out of reach or children or other unauthorized persons.

Additional precautions are required for applied chemicals. Obtain complete information from the manufacturer or distributor of the chemicals before using them.

⚠ Utility safety ⚠

Make sure the machine has sufficient clearance to pass in all directions. Pay special attention to overhead power lines and hanging obstacles. High voltage lines may require significant clearance for safety. Contact local authorities or utilities to obtain safe clearance distances from high voltage power lines.

Retract raised or extended components, if necessary. Remove or lower radio antennas or other accessories. Should a contact between the machine and an electric power source occur, the following precautions must be taken:

- Stop the machine movement immediately.
- Apply the park brake, stop the engine, and remove the key.
- Check if you can safely leave the cab or your actual position without contact with electrical wires. If not, stay in your position and call for help. If you can leave your position without touching lines, jump clear of the machine to make sure you do not make contact with the ground and the machine at the same time.
- Do not permit anyone to touch the machine until power has been shut off to the power lines.

⚠ Working at heights ⚠

When the normal use and maintenance of the machine requires working at heights:

- Correctly use installed steps, ladders, and railings.
- Never use ladders, steps, or railings while the machine is moving.
- Do not stand on surfaces which are not designated as steps or platforms.

Do not use the machine as a lift, ladder, or platform for working at heights.

⚠ Lifting and overhead loads ⚠

Do not used raised equipment as a work platform.

Know the full area of movement of the machine and equipment and do not enter or permit anyone to enter the area of movement while the machine is in operation.

Never enter or permit anyone to enter the area underneath raised equipment. Equipment and/or loads can fall unexpectedly and crush persons underneath it.

Do not leave equipment in raised position while parked or during service, unless securely supported. Hydraulic cylinders must be mechanically locked or supported if they are left in a raised position for service or access.

Headers or other lifting and handling equipment and its load will change the center of gravity of the machine. This can cause the machine to tip on slopes or uneven ground.

Equipment and associated loads can block visibility and cause an accident. Do not operate with insufficient visibility.

⚠ Mounting and dismounting ⚠

Mount and dismount the machine only at designated locations that have handholds, steps, or ladders.

Do not jump off the machine.

Make sure steps, ladders, and platforms remain clean and clear of debris and foreign substances. Injury may result from slippery surfaces.

Face the machine when mounting and dismounting.

Maintain a three-point contact with steps, ladders, and handholds.

Never mount or dismount from a moving machine.

Do not use the steering wheel or other controls or accessories as handholds when entering or exiting the cab or operator’s platform.

⚠ Header lift locks ⚠

Do not work under the machine header unless it is securely blocked and/or the header safety latch is engaged.

Header will fall rapidly if hydraulic lift system should fail.

Rest header on ground or engage lift cylinder lockouts when working around raised header.

The header lift locks are engaged on the left-hand side of the machine by pushing handle rearward, as shown.

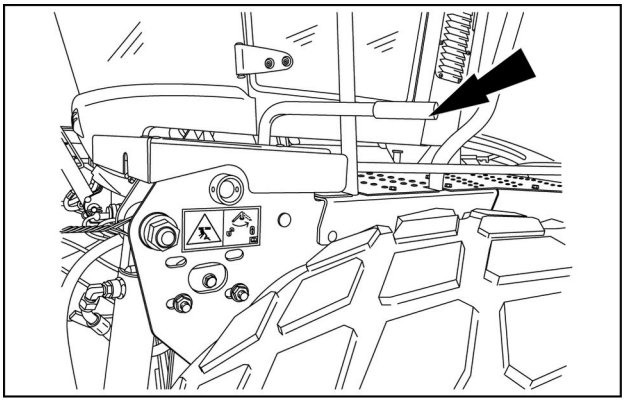

NHIL14WR00275AA 4

Personal safety - Emergency exit

Speedrower® 130	NA

⚠ WARNING

Flying objects!
Some of the glass could shatter inward. Cover your head, particularly your eyes, while using the hammer. Use a shirt or a jacket, or your arm, for protection.
Failure to comply could result in death or serious injury.

W0114A

If it becomes impossible to open the cab door, while in the cab, you can use the right cab window as an emergency exit. Remove the hammer **(1)** from the bracket on the right rear post of the cab. Use the pointed hammer to shatter one of the windows.

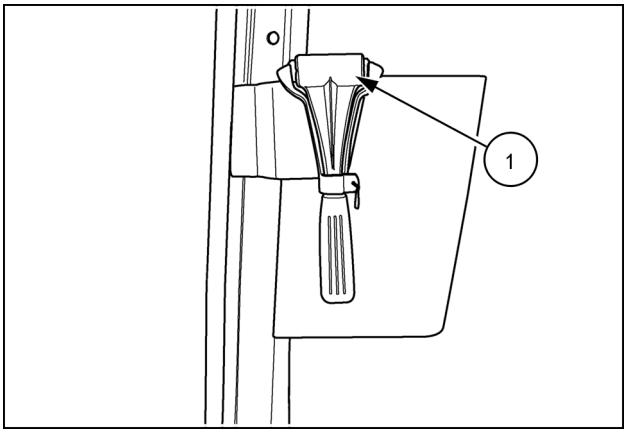

10041203 1

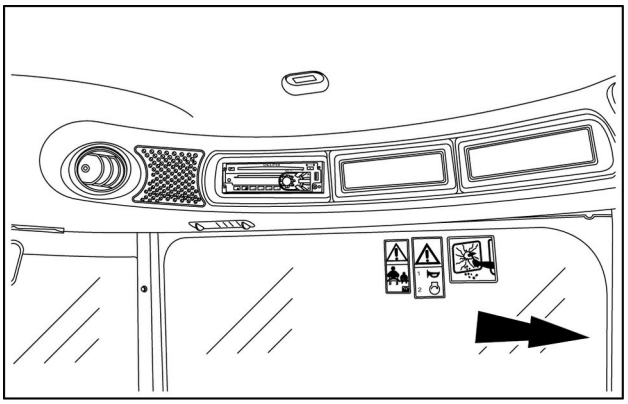

NHIL14WR00268AA 2

Personal safety - Hydraulic system safety

⚠ DANGER

Pressurized system!
Always remove all pressure before working on the hydraulic system. Follow the pressure BLEED program in the Configuration Mode to remove the pressure in the entire hydraulic system.
Failure to comply will result in death or serious injury.

D0035A

⚠ WARNING

Escaping fluid!
Hydraulic fluid or diesel fuel leaking under pressure can penetrate the skin and cause infection or other injury. To prevent personal injury: Relieve all pressure before disconnecting fluid lines or performing work on the hydraulic system. Before applying pressure, make sure all connections are tight and all components are in good condition. Never use your hand to check for suspected leaks under pressure. Use a piece of cardboard or wood for this purpose. If injured by leaking fluid, see your doctor immediately.
Failure to comply could result in death or serious injury.

W0178A

⚠ WARNING

Escaping fluid!
If a hydraulic hose, line, or pipe shows signs of wear or damage, replace the component IMMEDIATELY.
Failure to comply could result in death or serious injury.

W0297A

⚠ WARNING

Pressurized system!
Hydraulic accumulators contain gas and oil under pressure. Service or repair must be performed only by trained service technician.
Failure to comply could result in death or serious injury.

W1176B

NOTE: *The accumulator(s) keeps the hydraulic flotation system at a high pressure, even without the engine running.*

Personal safety - Maintenance safety

Speedrower® 130	NA

⚠ WARNING

Avoid injury! Always do the following before lubricating, maintaining, or servicing the machine.
1. Disengage all drives.
2. Engage parking brake.
3. Lower all attachments to the ground, or raise and engage all safety locks.
4. Shut off engine.
5. Remove key from key switch.
6. Wait for all machine movement to stop.
Failure to comply could result in death or serious injury.

W1299A

⚠ WARNING

Burn hazard!
Be very careful to avoid contact with hot fluids. If fluid is extremely hot, allow it to cool to a moderately warm temperature before proceeding.
Failure to comply could result in death or serious injury.

W0362A

⚠ WARNING

Illustrations in this manual may show protective shielding open or removed to better illustrate a particular feature or adjustment.
Replace all shields before operating the machine.
Failure to comply could result in death or serious injury.

W0012A

Apply the parking brake **(1)** and shut off the engine.

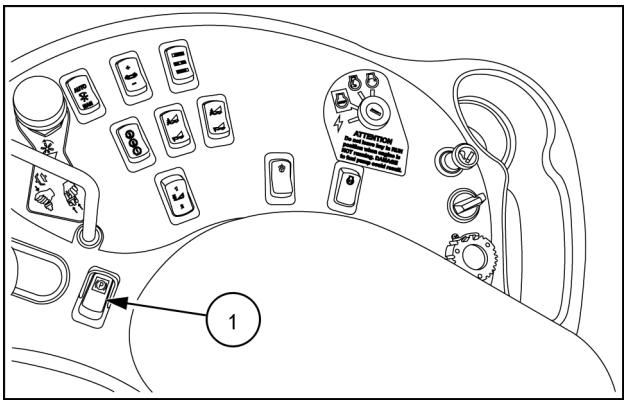

NHIL13WR00516AA 1

Whenever the header is raised, engage the header lift locks **(1)**.

NOTICE: *Keep the windrower free from crop debris and oil to prevent fires.*

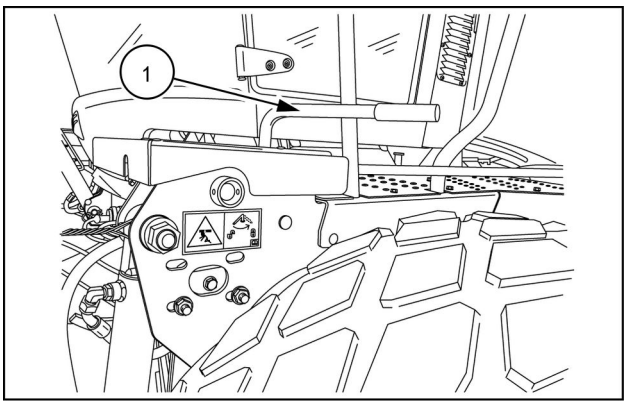

NHIL14WR00275AA 2

Safety rules - Ecology and the environment

Speedrower® 130	NA

Soil, air, and water quality is important for all industries and life in general. When legislation does not yet rule the treatment of some of the substances that advanced technology requires, sound judgment should govern the use and disposal of products of a chemical and petrochemical nature.

Familiarize yourself with the relative legislation applicable to your country, and make sure that you understand this legislation. Where no legislation exists, obtain information from suppliers of oils, filters, batteries, fuels, anti-freeze, cleaning agents, etc., with regard to the effect of these substances on man and nature and how to safely store, use, and dispose of these substances.

Helpful hints

- Avoid the use of cans or other inappropriate pressurized fuel delivery systems to fill tanks. Such delivery systems may cause considerable spillage.
- In general, avoid skin contact with all fuels, oils, acids, solvents, etc. Most of these products contain substances that may be harmful to your health.
- Modern oils contain additives. Do not burn contaminated fuels and or waste oils in ordinary heating systems.
- Avoid spillage when you drain fluids such as used engine coolant mixtures, engine oil, hydraulic fluid, brake fluid, etc. Do not mix drained brake fluids or fuels with lubricants. Store all drained fluids safely until you can dispose of the fluids in a proper way that complies with all local legislation and available resources.
- Do not allow coolant mixtures to get into the soil. Collect and dispose of coolant mixtures properly.
- The air-conditioning system contains gases that should not be released into the atmosphere. Consult an air-conditioning specialist or use a special extractor to recharge the system properly.
- Repair any leaks or defects in the engine cooling system or hydraulic system immediately.
- Do not increase the pressure in a pressurized circuit as this may lead to a component failure.
- Protect hoses during welding. Penetrating weld splatter may burn a hole or weaken hoses, allowing the loss of oils, coolant, etc.

Battery recycling

Batteries and electric accumulators contain several substances that can have a harmful effect on the environment if the batteries are not properly recycled after use. Improper disposal of batteries can contaminate the soil, groundwater, and waterways. NEW HOLLAND strongly recommends that you return all used batteries to a NEW HOLLAND dealer, who will dispose of the used batteries or recycle the used batteries properly. In some countries, this is a legal requirement.

Mandatory battery recycling

NOTE: *The following requirements are mandatory in Brazil.*

Batteries are made of lead plates and a sulfuric acid solution. Because batteries contain heavy metals such as lead, CONAMA Resolution 401/2008 requires you to return all used batteries to the battery dealer when you replace any batteries. Do not dispose of batteries in your household garbage.

Points of sale are obliged to:

- Accept the return of your used batteries
- Store the returned batteries in a suitable location
- Send the returned batteries to the battery manufacturer for recycling

Personal safety - Do not operate tag

Speedrower® 130	NA

⚠ WARNING

Avoid injury! Always do the following before lubricating, maintaining, or servicing the machine.
1. Disengage all drives.
2. Engage parking brake.
3. Lower all attachments to the ground, or raise and engage all safety locks.
4. Shut off engine.
5. Remove key from key switch.
6. Switch off battery key, if installed.
7. Wait for all machine movement to stop.
Failure to comply could result in death or serious injury.

W0047A

Before you service the machine, put a DO NOT OPERATE tag on the instrument panel.

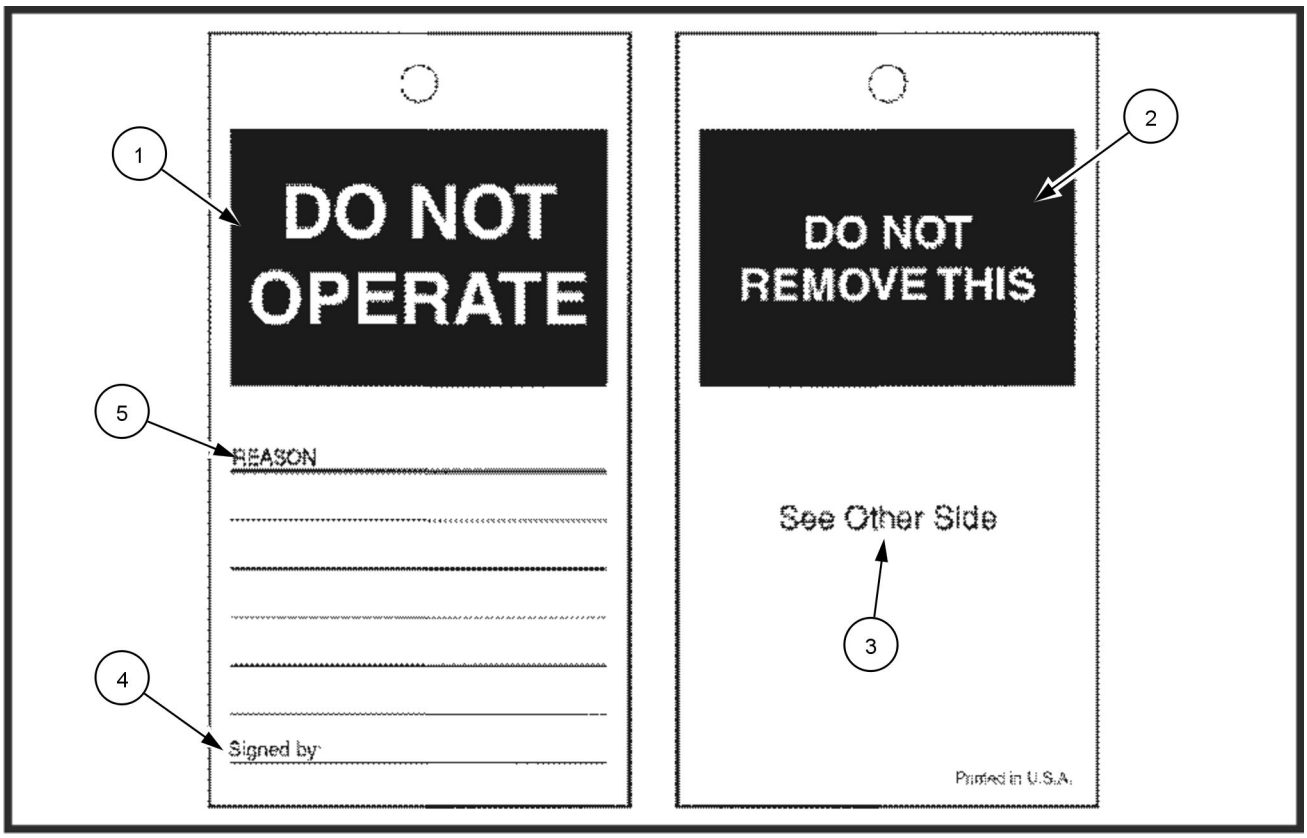

321_4614 1

DO NOT OPERATE TAG

A. **(1)** Do not operate.
B. **(2)** Do not remove this.
C. **(3)** See other side.
D. **(4)** Signed by.
E. **(5)** Reason

The DO NOT OPERATE tag can be obtained from your NEW HOLLAND dealer.

Torque - Minimum tightening torques for normal assembly

Speedrower® 130	NA

METRIC NON-FLANGED HARDWARE

NOM. SIZE	CLASS 8.8 BOLT and CLASS 8 NUT		CLASS 10.9 BOLT and CLASS 10 NUT		LOCKNUT CL.8 W/CL8.8 BOLT	LOCKNUT CL.10 W/CL10.9 BOLT
	UNPLATED	PLATED W/ZnCr	UNPLATED	PLATED W/ZnCr		
M4	2.2 N·m (19 lb in)	2.9 N·m (26 lb in)	3.2 N·m (28 lb in)	4.2 N·m (37 lb in)	2 N·m (18 lb in)	2.9 N·m (26 lb in)
M5	4.5 N·m (40 lb in)	5.9 N·m (52 lb in)	6.4 N·m (57 lb in)	8.5 N·m (75 lb in)	4 N·m (36 lb in)	5.8 N·m (51 lb in)
M6	7.5 N·m (66 lb in)	10 N·m (89 lb in)	11 N·m (96 lb in)	15 N·m (128 lb in)	6.8 N·m (60 lb in)	10 N·m (89 lb in)
M8	18 N·m (163 lb in)	25 N·m (217 lb in)	26 N·m (234 lb in)	35 N·m (311 lb in)	17 N·m (151 lb in)	24 N·m (212 lb in)
M10	37 N·m (27 lb ft)	49 N·m (36 lb ft)	52 N·m (38 lb ft)	70 N·m (51 lb ft)	33 N·m (25 lb ft)	48 N·m (35 lb ft)
M12	64 N·m (47 lb ft)	85 N·m (63 lb ft)	91 N·m (67 lb ft)	121 N·m (90 lb ft)	58 N·m (43 lb ft)	83 N·m (61 lb ft)
M16	158 N·m (116 lb ft)	210 N·m (155 lb ft)	225 N·m (166 lb ft)	301 N·m (222 lb ft)	143 N·m (106 lb ft)	205 N·m (151 lb ft)
M20	319 N·m (235 lb ft)	425 N·m (313 lb ft)	440 N·m (325 lb ft)	587 N·m (433 lb ft)	290 N·m (214 lb ft)	400 N·m (295 lb ft)
M24	551 N·m (410 lb ft)	735 N·m (500 lb ft)	762 N·m (560 lb ft)	1016 N·m (750 lb ft)	501 N·m (370 lb ft)	693 N·m (510 lb ft)

NOTE: *M4 through M8 hardware torque specifications are shown in pound-inches. M10 through M24 hardware torque specifications are shown in pound-feet.*

METRIC FLANGED HARDWARE

NOM. SIZE	CLASS 8.8 BOLT and CLASS 8 NUT		CLASS 10.9 BOLT and CLASS 10 NUT		LOCKNUT CL.8 W/CL8.8 BOLT	LOCKNUT CL.10 W/CL10.9 BOLT
	UNPLATED	PLATED W/ZnCr	UNPLATED	PLATED W/ZnCr		
M4	2.4 N·m (21 lb in)	3.2 N·m (28 lb in)	3.5 N·m (31 lb in)	4.6 N·m (41 lb in)	2.2 N·m (19 lb in)	3.1 N·m (27 lb in)
M5	4.9 N·m (43 lb in)	6.5 N·m (58 lb in)	7.0 N·m (62 lb in)	9.4 N·m (83 lb in)	4.4 N·m (39 lb in)	6.4 N·m (57 lb in)
M6	8.3 N·m (73 lb in)	11 N·m (96 lb in)	12 N·m (105 lb in)	16 N·m (141 lb in)	7.5 N·m (66 lb in)	11 N·m (96 lb in)
M8	20 N·m (179 lb in)	27 N·m (240 lb in)	29 N·m (257 lb in)	39 N·m (343 lb in)	18 N·m (163 lb in)	27 N·m (240 lb in)
M10	40 N·m (30 lb ft)	54 N·m (40 lb ft)	57 N·m (42 lb ft)	77 N·m (56 lb ft)	37 N·m (27 lb ft)	53 N·m (39 lb ft)
M12	70 N·m (52 lb ft)	93 N·m (69 lb ft)	100 N·m (74 lb ft)	134 N·m (98 lb ft)	63 N·m (47 lb ft)	91 N·m (67 lb ft)
M16	174 N·m (128 lb ft)	231 N·m (171 lb ft)	248 N·m (183 lb ft)	331 N·m (244 lb ft)	158 N·m (116 lb ft)	226 N·m (167 lb ft)
M20	350 N·m (259 lb ft)	467 N·m (345 lb ft)	484 N·m (357 lb ft)	645 N·m (476 lb ft)	318 N·m (235 lb ft)	440 N·m (325 lb ft)
M24	607 N·m (447 lb ft)	809 N·m (597 lb ft)	838 N·m (618 lb ft)	1118 N·m (824 lb ft)	552 N·m (407 lb ft)	

IDENTIFICATION

Metric Hex head and carriage bolts, classes 5.6 and up

1. Manufacturer's Identification
2. Property Class

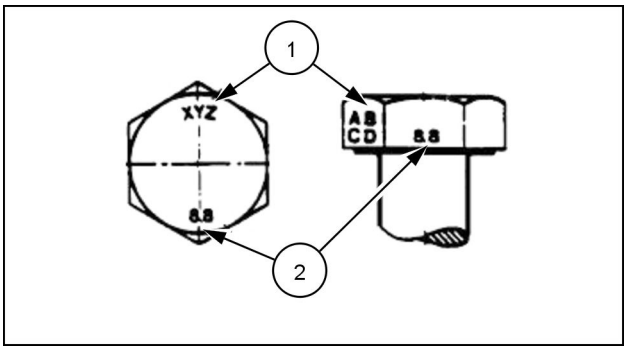

20083680 1

Metric Hex nuts and locknuts, classes 05 and up

1. Manufacturer's Identification
2. Property Class
3. Clock Marking of Property Class and Manufacturer's Identification (Optional), i.e. marks **60 °** apart indicate Class 10 properties, and marks **120 °** apart indicate Class 8.

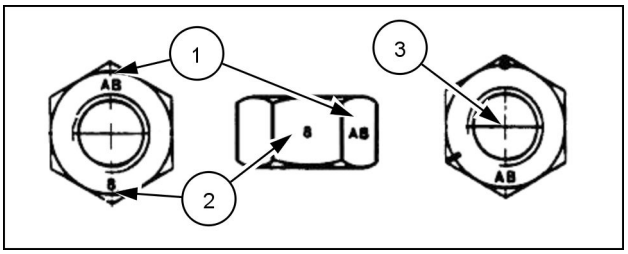

20083681 2

INCH NON-FLANGED HARDWARE

NOMINAL SIZE	SAE GRADE 5 BOLT and NUT		SAE GRADE 8 BOLT and NUT		LOCKNUT GrB W/ Gr5 BOLT	LOCKNUT GrC W/ Gr8 BOLT
	UN-PLATED or PLATED SILVER	PLATED W/ZnCr GOLD	UN-PLATED or PLATED SILVER	PLATED W/ZnCr GOLD		
1/4	8 N·m (71 lb in)	11 N·m (97 lb in)	12 N·m (106 lb in)	16 N·m (142 lb in)	8.5 N·m (75 lb in)	12.2 N·m (109 lb in)
5/16	17 N·m (150 lb in)	23 N·m (204 lb in)	24 N·m (212 lb in)	32 N·m (283 lb in)	17.5 N·m (155 lb in)	25 N·m (220 lb in)
3/8	30 N·m (22 lb ft)	40 N·m (30 lb ft)	43 N·m (31 lb ft)	57 N·m (42 lb ft)	31 N·m (23 lb ft)	44 N·m (33 lb ft)
7/16	48 N·m (36 lb ft)	65 N·m (48 lb ft)	68 N·m (50 lb ft)	91 N·m (67 lb ft)	50 N·m (37 lb ft)	71 N·m (53 lb ft)
1/2	74 N·m (54 lb ft)	98 N·m (73 lb ft)	104 N·m (77 lb ft)	139 N·m (103 lb ft)	76 N·m (56 lb ft)	108 N·m (80 lb ft)
9/16	107 N·m (79 lb ft)	142 N·m (105 lb ft)	150 N·m (111 lb ft)	201 N·m (148 lb ft)	111 N·m (82 lb ft)	156 N·m (115 lb ft)
5/8	147 N·m (108 lb ft)	196 N·m (145 lb ft)	208 N·m (153 lb ft)	277 N·m (204 lb ft)	153 N·m (113 lb ft)	215 N·m (159 lb ft)
3/4	261 N·m (193 lb ft)	348 N·m (257 lb ft)	369 N·m (272 lb ft)	491 N·m (362 lb ft)	271 N·m (200 lb ft)	383 N·m (282 lb ft)
7/8	420 N·m (310 lb ft)	561 N·m (413 lb ft)	594 N·m (438 lb ft)	791 N·m (584 lb ft)	437 N·m (323 lb ft)	617 N·m (455 lb ft)
1	630 N·m (465 lb ft)	841 N·m (620 lb ft)	890 N·m (656 lb ft)	1187 N·m (875 lb ft)	654 N·m (483 lb ft)	924 N·m (681 lb ft)

NOTE: *For Imperial Units,* ***1/4 in*** *and* ***5/16 in*** *hardware torque specifications are shown in pound-inches.* ***3/8 in*** *through* ***1 in*** *hardware torque specifications are shown in pound-feet.*

INCH FLANGED HARDWARE

NOM-INAL SIZE	SAE GRADE 5 BOLT and NUT		SAE GRADE 8 BOLT and NUT		LOCKNUT GrF W/ Gr5 BOLT	LOCKNUT GrG W/ Gr8 BOLT
	UNPLATED or PLATED SILVER	PLATED W/ZnCr GOLD	UNPLATED or PLATED SILVER	PLATED W/ZnCr GOLD		
1/4	9 N·m (80 lb in)	12 N·m (106 lb in)	13 N·m (115 lb in)	17 N·m (150 lb in)	8 N·m (71 lb in)	12 N·m (106 lb in)
5/16	19 N·m (168 lb in)	25 N·m (221 lb in)	26 N·m (230 lb in)	35 N·m (310 lb in)	17 N·m (150 lb in)	24 N·m (212 lb in)
3/8	33 N·m (25 lb ft)	44 N·m (33 lb ft)	47 N·m (35 lb ft)	63 N·m (46 lb ft)	30 N·m (22 lb ft)	43 N·m (32 lb ft)
7/16	53 N·m (39 lb ft)	71 N·m (52 lb ft)	75 N·m (55 lb ft)	100 N·m (74 lb ft)	48 N·m (35 lb ft)	68 N·m (50 lb ft)
1/2	81 N·m (60 lb ft)	108 N·m (80 lb ft)	115 N·m (85 lb ft)	153 N·m (113 lb ft)	74 N·m (55 lb ft)	104 N·m (77 lb ft)
9/16	117 N·m (86 lb ft)	156 N·m (115 lb ft)	165 N·m (122 lb ft)	221 N·m (163 lb ft)	106 N·m (78 lb ft)	157 N·m (116 lb ft)
5/8	162 N·m (119 lb ft)	216 N·m (159 lb ft)	228 N·m (168 lb ft)	304 N·m (225 lb ft)	147 N·m (108 lb ft)	207 N·m (153 lb ft)
3/4	287 N·m (212 lb ft)	383 N·m (282 lb ft)	405 N·m (299 lb ft)	541 N·m (399 lb ft)	261 N·m (193 lb ft)	369 N·m (272 lb ft)
7/8	462 N·m (341 lb ft)	617 N·m (455 lb ft)	653 N·m (482 lb ft)	871 N·m (642 lb ft)	421 N·m (311 lb ft)	594 N·m (438 lb ft)
1	693 N·m (512 lb ft)	925 N·m (682 lb ft)	979 N·m (722 lb ft)	1305 N·m (963 lb ft)	631 N·m (465 lb ft)	890 N·m (656 lb ft)

IDENTIFICATION

Inch Bolts and free-spinning nuts

SAE Grade Identification			
1	Grade 2 - No Marks	4	Grade 2 Nut - No Marks
2	Grade 5 - Three Marks	5	Grade 5 Nut - Marks **120 °** Apart
3	Grade 8 - Five Marks	6	Grade 8 Nut - Marks **60 °** Apart

Inch Lock Nuts, All Metal (Three optional methods)

Grade Identification

Grade	Corner Marking Method (1)	Flats Marking Method (2)	Clock Marking Method (3)
Grade A	No Notches	No Mark	No Marks
Grade B	One Circumferential Notch	Letter B	Three Marks
Grade C	Two Circumferential Notches	Letter C	Six Marks

Grade Marking Examples

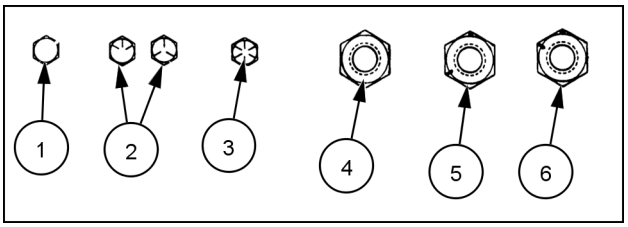

20107570 3

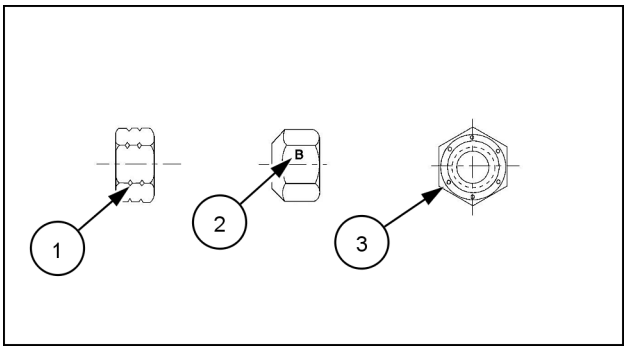

20090268 4

Torque - Standard torque data for hydraulics

Speedrower® 130	NA

INSTALLATION OF ADJUSTABLE FITTINGS IN STRAIGHT THREAD O RING BOSSES

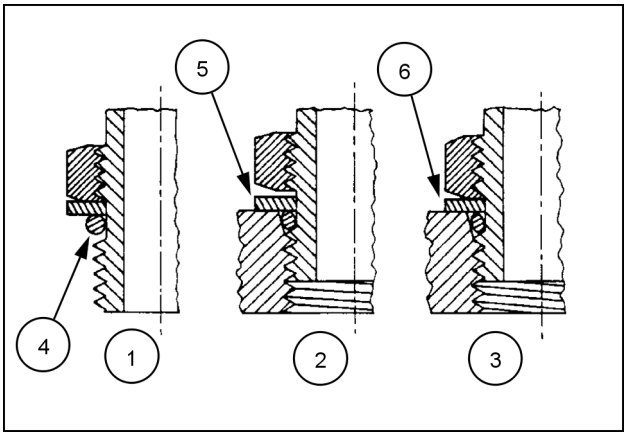

23085659 1

1. Lubricate the O-ring by coating it with a light oil or petroleum. Install the O-ring in the groove adjacent to the metal backup washer which is assembled at the extreme end of the groove **(4)**.
2. Install the fitting into the SAE straight thread boss until the metal backup washer contacts the face of the boss **(5)**.

   NOTE: *Do not over tighten and distort the metal backup washer.*
3. Position the fitting by turning out (counterclockwise) up to a maximum of one turn. Holding the pad of the fitting with a wrench, tighten the locknut and washer against the face of the boss **(6)**.

STANDARD TORQUE DATA FOR HYDRAULIC TUBES AND FITTINGS

TUBE NUTS FOR 37° FLARED FITTINGS				O-RING BOSS PLUGS ADJUSTABLE FITTING LOCKNUTS, SWIVEL JIC- 37° SEATS
SIZE	**TUBING OD**	**THREAD SIZE**	**TORQUE**	**TORQUE**
4	**6.4 mm (1/4 in)**	7/16-20	**12 - 16 N·m (9 - 12 lb ft)**	**8 - 14 N·m (6 - 10 lb ft)**
5	**7.9 mm (5/16 in)**	1/2-20	**16 - 20 N·m (12 - 15 lb ft)**	**14 - 20 N·m (10 - 15 lb ft)**
6	**9.5 mm (3/8 in)**	9/16-18	**29 - 33 N·m (21 - 24 lb ft)**	**20 - 27 N·m (15 - 20 lb ft)**
8	**12.7 mm (1/2 in)**	3/4-16	**47 - 54 N·m (35 - 40 lb ft)**	**34 - 41 N·m (25 - 30 lb ft)**
10	**15.9 mm (5/8 in)**	7/8-14	**72 - 79 N·m (53 - 58 lb ft)**	**47 - 54 N·m (35 - 40 lb ft)**
12	**19.1 mm (3/4 in)**	1-1/16-12	**104 - 111 N·m (77 - 82 lb ft)**	**81 - 95 N·m (60 - 70 lb ft)**
14	**22.2 mm (7/8 in)**	1-3/16-12	**122 - 136 N·m (90 - 100 lb ft)**	**95 - 109 N·m (70 - 80 lb ft)**
16	**25.4 mm (1 in)**	1-5/16-12	**149 - 163 N·m (110 - 120 lb ft)**	**108 - 122 N·m (80 - 90 lb ft)**
20	**31.8 mm (1-1/4 in)**	1-5/8-12	**190 - 204 N·m (140 - 150 lb ft)**	**129 - 158 N·m (95 - 115 lb ft)**
24	**38.1 mm (1-1/2 in)**	1-7/8-12	**217 - 237 N·m (160 - 175 lb ft)**	**163 - 190 N·m (120 - 140 lb ft)**
32	**50.8 mm (2 in)**	2-1/2-12	**305 - 325 N·m (225 - 240 lb ft)**	**339 - 407 N·m (250 - 300 lb ft)**

These torques are not recommended for tubes of **12.7 mm** (**1/2 in**) OD and larger with wall thickness of **0.889 mm** (**0.035 in**) or less. The torque is specified for **0.889 mm** (**0.035 in**) wall tubes on each application individually.

Before installing and torquing **37 °** flared fittings, clean the face of the flare and threads with a clean solvent or Loctite cleaner and apply hydraulic sealant **LOCTITE® 569** to the **37 °** flare and the threads.

Install fitting and torque to specified torque, loosen fitting and retorque to specifications.

PIPE THREAD FITTING TORQUE

Before installing and tightening pipe fittings, clean the threads with a clean solvent or Loctite cleaner and apply sealant **LOCTITE® 567 PST PIPE SEALANT** for all fittings including stainless steel or **LOCTITE® 565 PST** for most metal fittings. For high filtration/zero contamination systems use **LOCTITE® 545**.

PIPE THREAD FITTING	
Thread Size	**Torque (Maximum)**
1/8-27	**13 N·m** (**10 lb ft**)
1/4-18	**16 N·m** (**12 lb ft**)
3/8-18	**22 N·m** (**16 lb ft**)
1/2-14	**41 N·m** (**30 lb ft**)
3/4-14	**54 N·m** (**40 lb ft**)

INSTALLATION OF ORFS (O-RING FLAT FACED) FITTINGS

When installing ORFS fittings thoroughly clean both flat surfaces of the fittings **(1)** and lubricate the O-ring **(2)** with light oil. Make sure both surfaces are aligned properly. Torque the fitting to specified torque listed throughout the repair manual.

NOTICE: *If the fitting surfaces are not properly cleaned, the O-ring will not seal properly. If the fitting surfaces are not properly aligned, the fittings may be damaged and will not seal properly.*

NOTICE: *Always use genuine factory replacement oils and filters to ensure proper lubrication and filtration of engine and hydraulic system oils.*

The use of proper oils, grease, and keeping the hydraulic system clean will extend machine and component life.

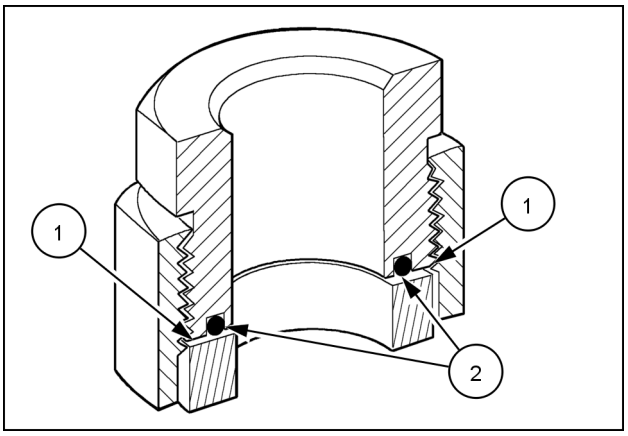

50011183 2

Product: New Holland Speedrower? 130 Self-Propelled Windrower Service Repair Manual(Part number 47904535)
Full Download: https://www.arepairmanual.com/downloads/new-holland-speedrower-130-self-propelled-windrower-service-repair-manualpart-number-47904535/

Basic instructions - Shop and assembly

Speedrower® 130	NA

Shimming

For each adjustment operation, select adjusting shims and measure the adjusting shims individually using a micrometer, then add up the recorded values. Do not rely on measuring the entire shimming set, which may be incorrect, or the rated value shown on each shim.

Rotating shaft seals

For correct rotating shaft seal installation, proceed as follows:

1. Before assembly, allow the seal to soak in the oil it will be sealing for at least thirty minutes.
2. Thoroughly clean the shaft and check that the working surface on the shaft is not damaged.
3. Position the sealing lip facing the fluid.

   NOTE: *With hydrodynamic lips, take into consideration the shaft rotation direction and position the grooves so that they will move the fluid towards the inner side of the seal.*
4. Coat the sealing lip with a thin layer of lubricant (use oil rather than grease). Fill the gap between the sealing lip and the dust lip on double lip seals with grease.
5. Insert the seal in its seat and press down using a flat punch or seal installation tool. Do not tap the seal with a hammer or mallet.
6. While you insert the seal, check that the seal is perpendicular to the seat. When the seal settles, make sure that the seal makes contact with the thrust element, if required.
7. To prevent damage to the seal lip on the shaft, position a protective guard during installation operations.

O-ring seals

Lubricate the O-ring seals before you insert them in the seats. This will prevent the O-ring seals from overturning and twisting, which would jeopardize sealing efficiency.

Sealing compounds

Apply a sealing compound on the mating surfaces when specified by the procedure. Before you apply the sealing compound, prepare the surfaces as directed by the product container.

Spare parts

Only use CNH Original Parts or NEW HOLLAND Original Parts.

Only genuine spare parts guarantee the same quality, duration, and safety as original parts, as they are the same parts that are assembled during standard production. Only CNH Original Parts or NEW HOLLAND Original Parts can offer this guarantee.

When ordering spare parts, always provide the following information:

- Machine model (commercial name) and Product Identification Number (PIN)
- Part number of the ordered part, which can be found in the parts catalog

Sample of manual. Download All 2636 pages at:
https://www.arepairmanual.com/downloads/new-holland-speedrower-130-self-propelled-windrower-service-repair-manualpa