Product: New Holland TS6.1 SERIES TIER 4B (FINAL) TRACTOR ELECTRICAL SCHEMATIC / CAB CONFIGURATIONS Manual
Full Download: https://www.arepairmanual.com/downloads/new-holland-ts6-1-series-tier-4b-final-tractor-electrical-schematic-cab-configurations-manual/

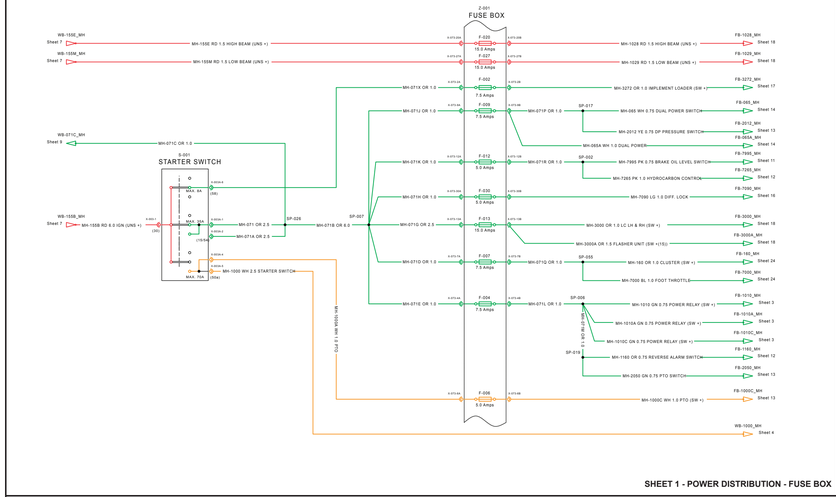

SHEET 1 - POWER DISTRIBUTION - FUSE BOX

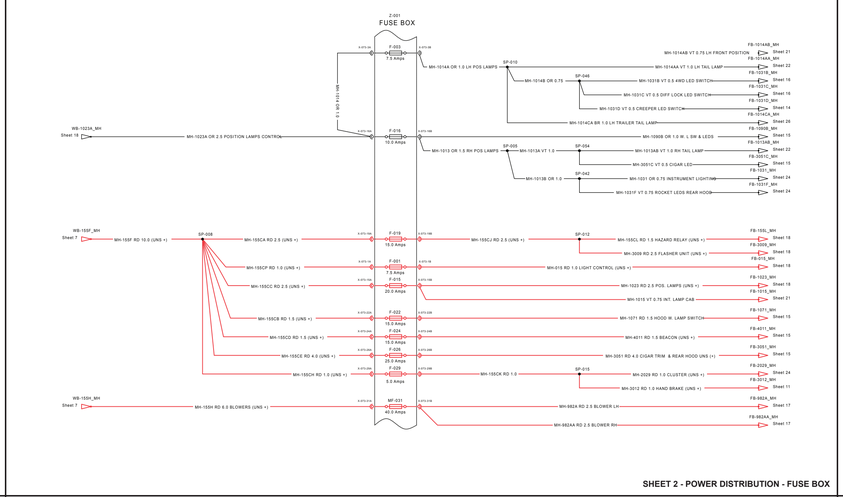

SHEET 2 - POWER DISTRIBUTION - FUSE BOX

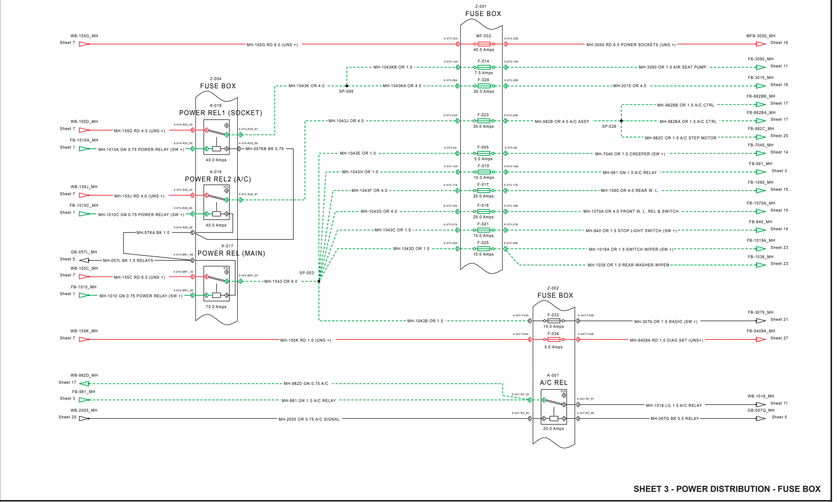

SHEET 3 - POWER DISTRIBUTION - FUSE BOX

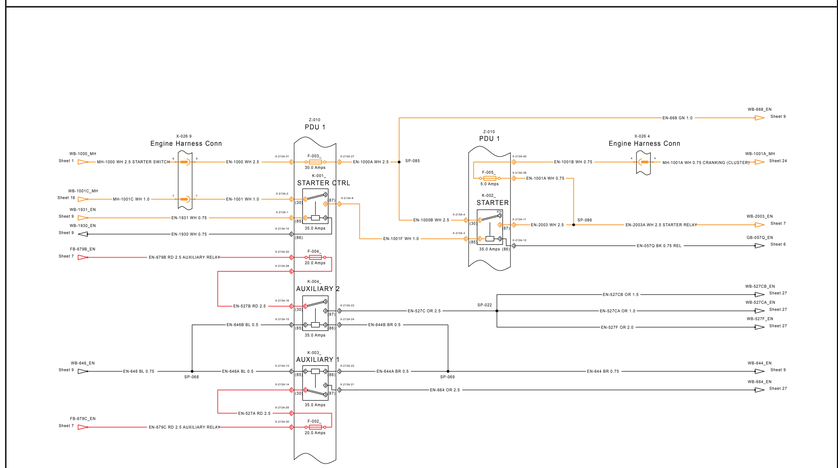

SHEET 4 - POWER DISTRIBUTION

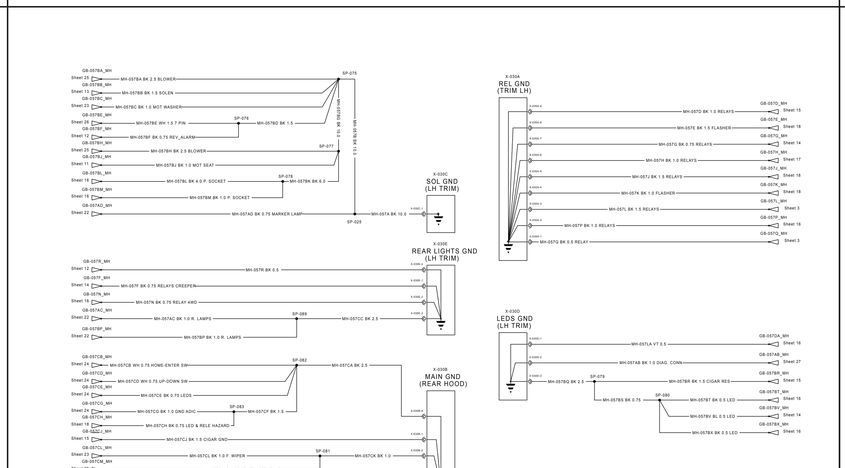

SHEET 5 - POWER DISTRIBUTION - GROUNDING SYSTEM

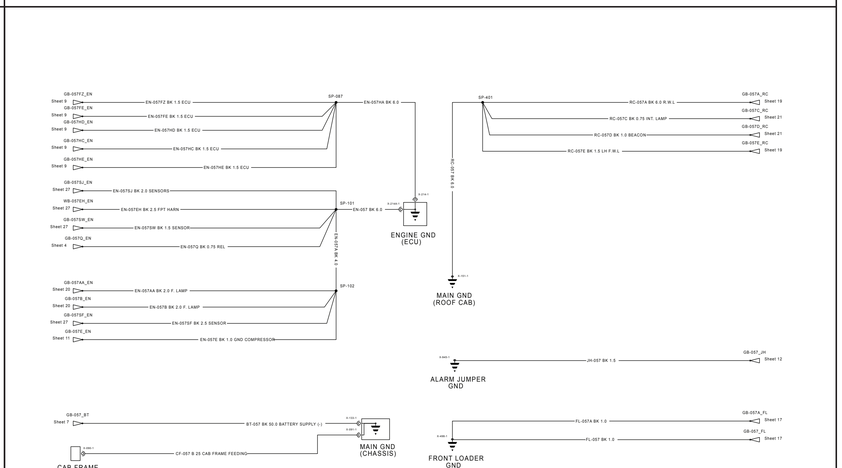

SHEET 6 - POWER DISTRIBUTION - GROUNDING SYSTEM

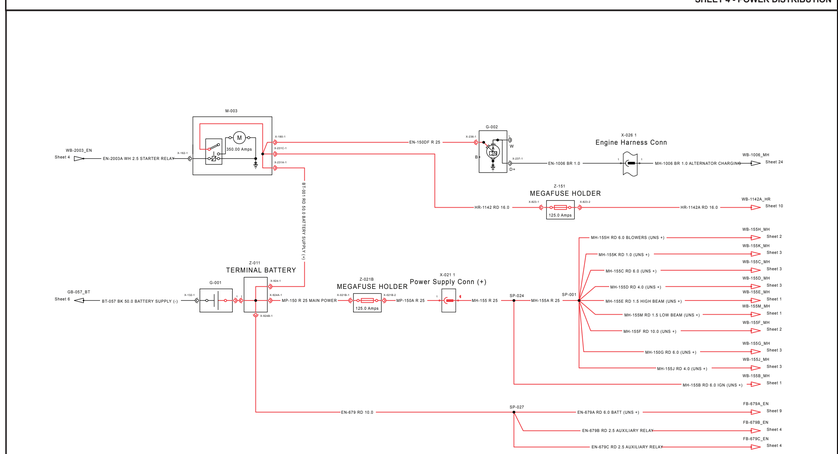

SHEET 7 - ENGINE - STARTING / CHARGING

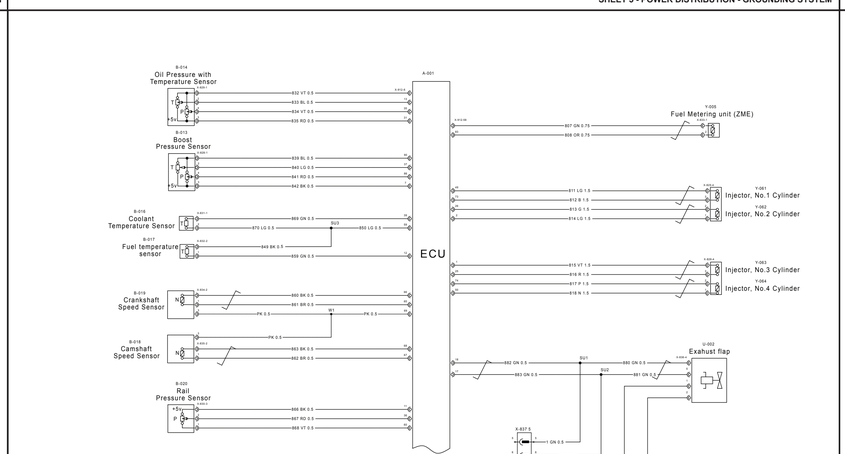

SHEET 8 - ECU 1 - ENGINE CONTROLLER

TS6.1 SERIES TIER 4B (FINAL) TRACTOR

47815869

ELECTRICAL SCHEMATIC CAB CONFIGURATIONS PIN NT00001M AND ABOVE 1ST EDITION, OCTOBER 2015

DESCRIPTION	SHEET
POWER DISTRIBUTION - FUSE BOX	1
POWER DISTRIBUTION - FUSE BOX	2
POWER DISTRIBUTION - FUSE BOX	3
POWER DISTRIBUTION - PDU	4
POWER DISTRIBUTION - GROUNDING SYSTEM	5
POWER DISTRIBUTION - GROUNDING SYSTEM	6
ENGINE - STARTING / CHARGING	7
ECU 1 - ENGINE CONTROLLER	8
ECU 2 - ENGINE CONTROLLER	9
ECU 3 - ENGINE CONTROLLER	10
ENGINE CONTROL	11
TRANSMISSION CONTROL	12
TRANSMISSION CONTROL	13
TRANSMISSION CONTROL	14
WORK LAMPS & CIGAR LIGHTER	15
TRANSMISSION CONTROL	16
BLOWERS & LOADER IMPLEMENT	17
CONTROL LIGHTS, HAZARD SWITCH, & FLASHER UNIT	18
LIGHTING - WORK LAMPS (ROOF)	19
LIGHTING - HEADLAMPS HOOD	20
LIGHTING - LAMPS & RADIO CAB	21
LIGHTING - REAR FENDER LAMPS & FWL ADAPTERS	22
WASHER & WIPERS - FRONT AND REAR	23
INSTRUMENT CLUSTER / DISPLAY	24
HEATING, VENTILATION, AND AIR CONDITIONING (HVAC)	25
POWER TRAILER SOCKET	26
CAN, SENSOR, AND DIAGNOSTICS	27

CIRCUIT COLOR INDEX

- 12V UNSWITCHED POWER
- IGNITION KEY ON
- STARTING SEQUENCE

COMPONENT LEGEND

Label Prefix	Component Type
A	Electronics
B	Sensors
D	Diodes
E	Lights
F	Fuses
G	Generators
H	Audio
J	Outlets
K	Relays
M	Motors
Q	Circuit Breakers
R	Resistive
S	Switches
W	Splice Blocks
Y	Solenoids

WIRING REFERENCES

Color	Color Code	Function
Black	BK	Ground, Chassis
Blue	BL	Printed Circuit Ground
White	WH	Increasing Actuation
Gray	GY	Decreasing Actuation
Orange	OR	Power After Ignition
Yellow	YE	Signal Wires
Red	RD	Battery Voltage
Violet	VT	Lighting
Pink	PK	Reference Voltage

MF - 431 - YE
- WIRE COLOR
- CIRCUIT NUMBER
- HARNESS CODE

ACTUATORS

HAND, FOOT, TEMPERATURE, LIQUID LEVEL FLOAT, LEVER, PRESSURE

SCHEMATIC SYMBOLS

DIODE, FUSE, TEMPERATURE SENSOR, MOTOR, SOLENOID COIL, RESISTOR, VARIABLE RESISTOR, CHASSIS GROUND (EARTH), TWISTED WIRES, LIGHT, AUDIBLE DEVICE, SPEED PICKUP, RELAY, HALL EFFECT SENSOR, CONTACTS: + MAINTAINED, ♣ MOMENTARY

Sample of manual. Download All 4 pages at:
https://www.arepairmanual.com/downloads/new-holland-ts6-1-series-tier-4b-final-tractor-electrical-schematic-cab-configurations-manual/

Product: New Holland TS6.1 SERIES TIER 4B (FINAL) TRACTOR ELECTRICAL SCHEMATIC / CAB CONFIGURATIONS Manual
Full Download: https://www.arepairmanual.com/downloads/new-holland-ts6-1-series-tier-4b-final-tractor-electrical-schematic-cab-configurations-manual/

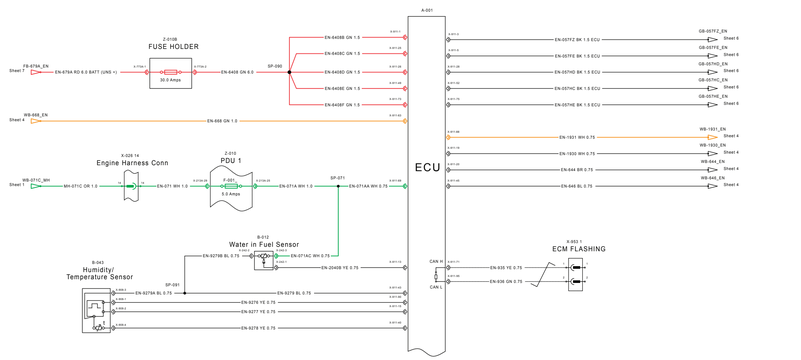

SHEET 9 - ECU 2 - ENGINE CONTROLLER

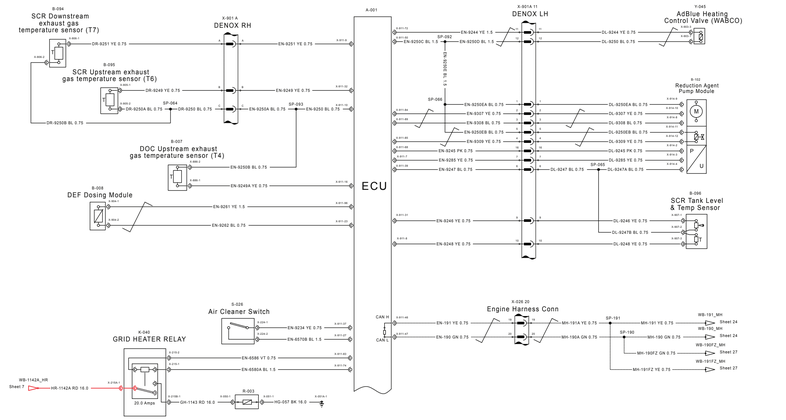

SHEET 10 - ECU 3 - ENGINE CONTROLLER

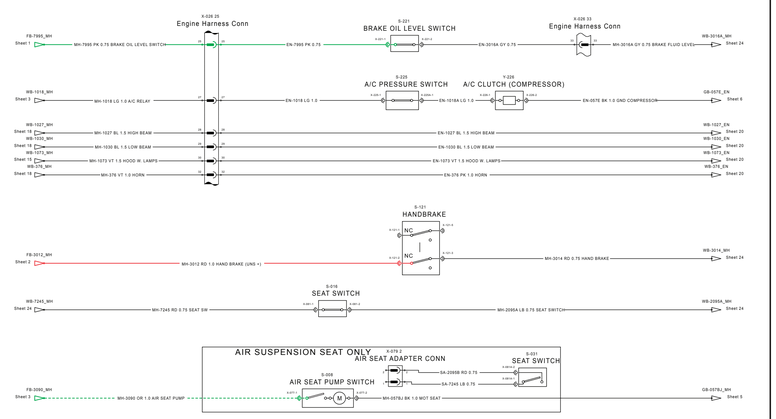

SHEET 11 - ENGINE CONTROL

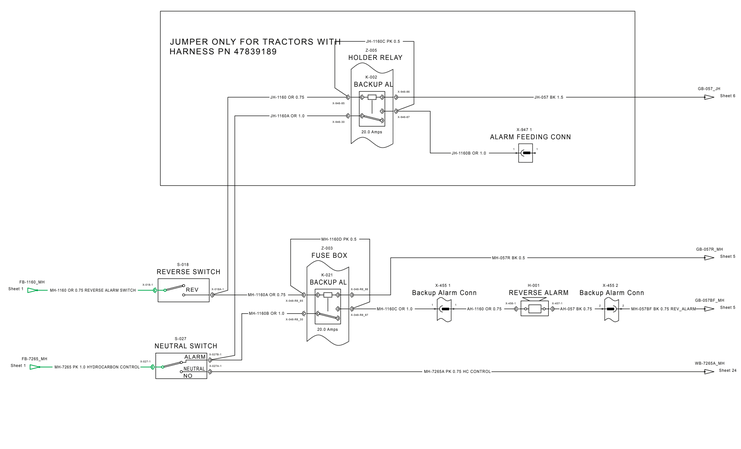

SHEET 12 - TRANSMISSION CONTROL

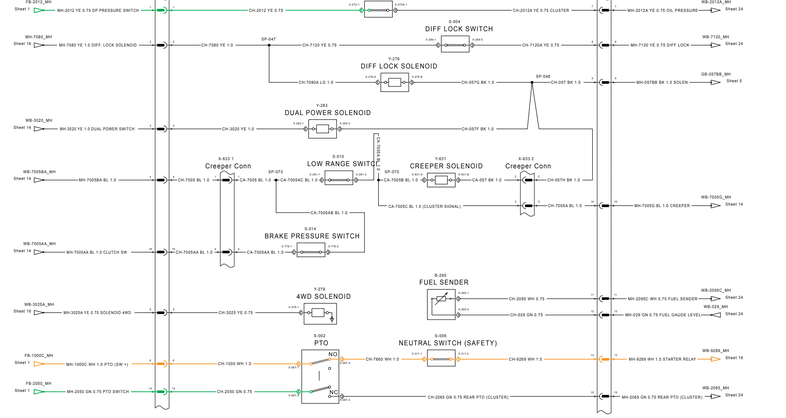

SHEET 13 - TRANSMISSION CONTROL

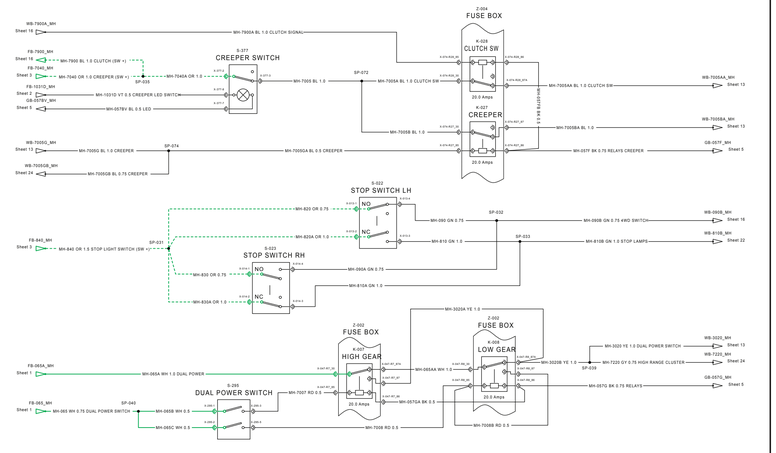

SHEET 14 - TRANSMISSION CONTROL

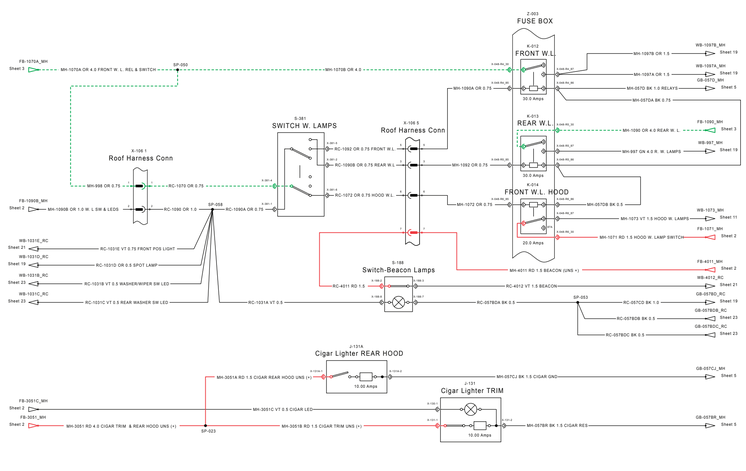

SHEET 15 - WORK LAMPS & CIGAR LIGHTER

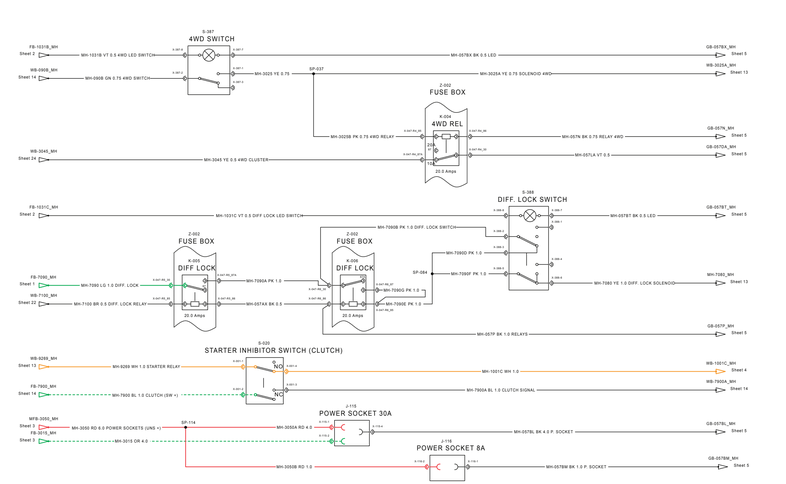

SHEET 16 - TRANSMISSION CONTROL

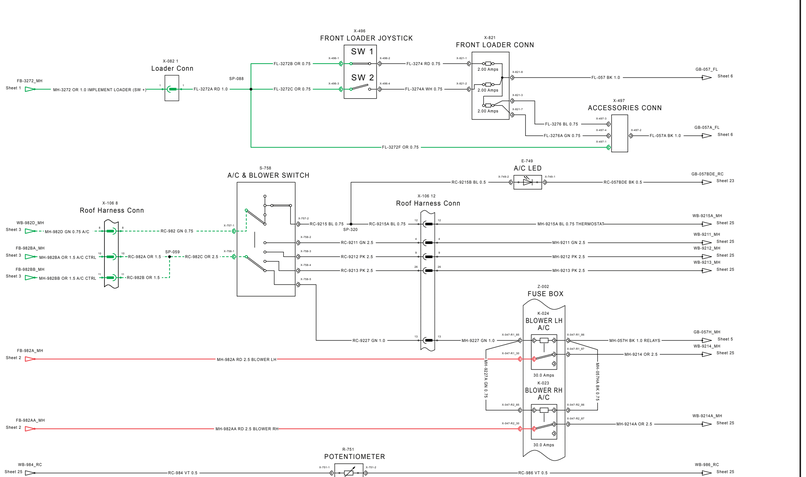

SHEET 17 - BLOWER & LOADER IMPLEMENT

Sample of manual. Download All 4 pages at:
https://www.arepairmanual.com/downloads/new-holland-ts6-1-series-tier-4b-final-tractor-electrical-schematic-cab-configurations-manual/