Product: New Holland Ford 09GN Series,960 Series 980 Series Yard Tractor Service Repair Manual
Full Download: https://www.arepairmanual.com/downloads/new-holland-ford-09gn-series960-series-980-series-yard-tractor-service-repair-manual/

FORD

Service Manual

Yard Tractors

Models 09GN2151, 09GN2152, 09GN2153, 09GN2154, 09GN2155, 09GN2198, 09GN2199, 9607430, 9607431, 9607432, 9607481, 9607482, 9800686, 9800687, 9800688, 9801250, 9809209,

Issue 9-94

(Replaces All Previous Issues)

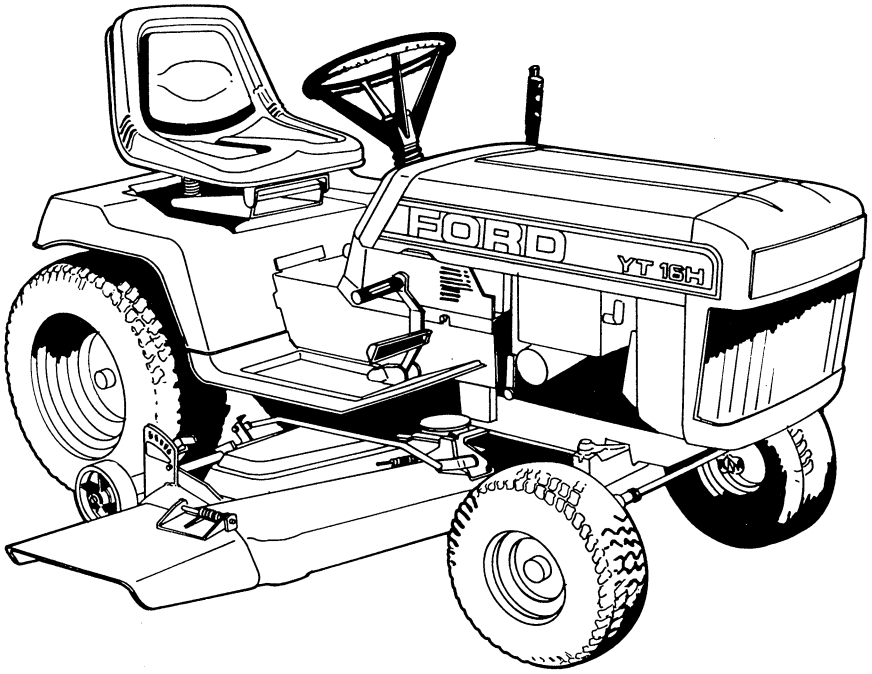

Reprinted

Sample of manual. Download All 131 pages at:
https://www.arepairmanual.com/downloads/new-holland-ford-09gn-series960-series-980-series-yard-tractor-service-repair-manual/

40215110 9/94

Product: New Holland Ford 09GN Series,960 Series 980 Series Yard Tractor Service Repair Manual
Full Download: https://www.arepairmanual.com/downloads/new-holland-ford-09g
n-series960-series-980-series-yard-tractor-service-repair-ma
nual/

YARD TRACTOR

GENERAL INFORMATION CHART

TRACTOR	YEAR	MODEL	TRANSMISSION	ENGINE	PARTS CATALOG	FICHE
YT12.5	1987	09GN-2155	PEERLESS 801-020B	B & S 404707-0124	17400	227
YT12.5	1988	9607430	PEERLESS 801-020B	B & S 404707-0124	17416	240
YT12.5	1989	9607430	PEERLESS 801-020C	B & S 404707-0124	17435	242
YT12.5	1990	9801250	PEERLESS 801-020C	KOH CV12.5S	17435	242
YT14	1991-92	9809209	PEERLESS 801-020D	KOH CV14S	17460	244
YT16	1984-85	09GN-2151	PEERLESS 801-020	B & S 402707-0161	17363	225
YT16	1986	09GN-2152	PEERLESS 801-020B	B & S 402707-0161	17363	225
YT16	1987	09GN-2153	PEERLESS 801-020B	B & S 402707-0183	17400	227
YT16	1988	9607431	PEERLESS 801-020B	B & S 402707-0183	17416	240
YT16	1989	9607431	PEERLESS 801-020C	B & S 402707-0183	17435	242
YT16	1990	9800686	PEERLESS 801-020C	KOH MV16S	17435	242
YT16	1991-92	9800686	PEERLESS 801-020D	KOH MV16S	17460	244
YT16 H	1984-85	09GN-2198	EATON 700-002	B & S 402707-0161	17363	225
YT16 H	1986	09GN-2199	EATON 700-002	B & S 402707-0161	17363	225
YT16 H	1987	09GN-2154	EATON 700-002	B & S 402707-0183	17400	227
YT16 H	1988	9607432	EATON 700-018	B & S 402707-0183	17416	240
YT16 H	1989	9607481	EATON 850-000	B & S 402707-1401	17435	242
YT16 H	1990	9800687	EATON 850-025	KOH MV16S	17435	242
YT16 H	1991	9800687	EATON 850-076	KOH MV16S	17460	244
YT18 H	1989	9607482	EATON 850-025	B & S 422777-1231	17435	242
YT18 H	1990	9800688	EATON 850-025	KOH MV18S	17435	242
YT18 H	1991	9800688	EATON 850-076	KOH MV18S	17460	244
YT16 H	1992	9800687	EATON 851	KOH MV16S	17460	244
YT18 H	1992	9800688	EATON 851	KOH MV18S	17460	244

	CATALOG#	FICHE#
BRIGGS & STRATION	17441	224
	17465	221A
	17442	221
	17286	220
KOHLER	4048	222
	17473	223

Engine Model	New Holland Publications Number	B & S Publications Number	Kohler Publications Number
B & S 404707	40546100	271172	–
KOH CV12.5S	40547700	–	TP-2339
KOH CV14S	40547700	–	TP-2339
B & S 402707	40546100	271172	–
KOH MV16	40548000	–	TP-2289
KOH MV18	40548000	–	TP-2289
B & S 422777	40546100	271172	–

Sample of Manual. Download All 131 pages at:
https://www.arepairmanual.com/downloads/new-holland-ford-09gn-series960-series-980-series-yard-tractor-service-repair-manu

WIRING DIAGRAM MODEL 09GN2151

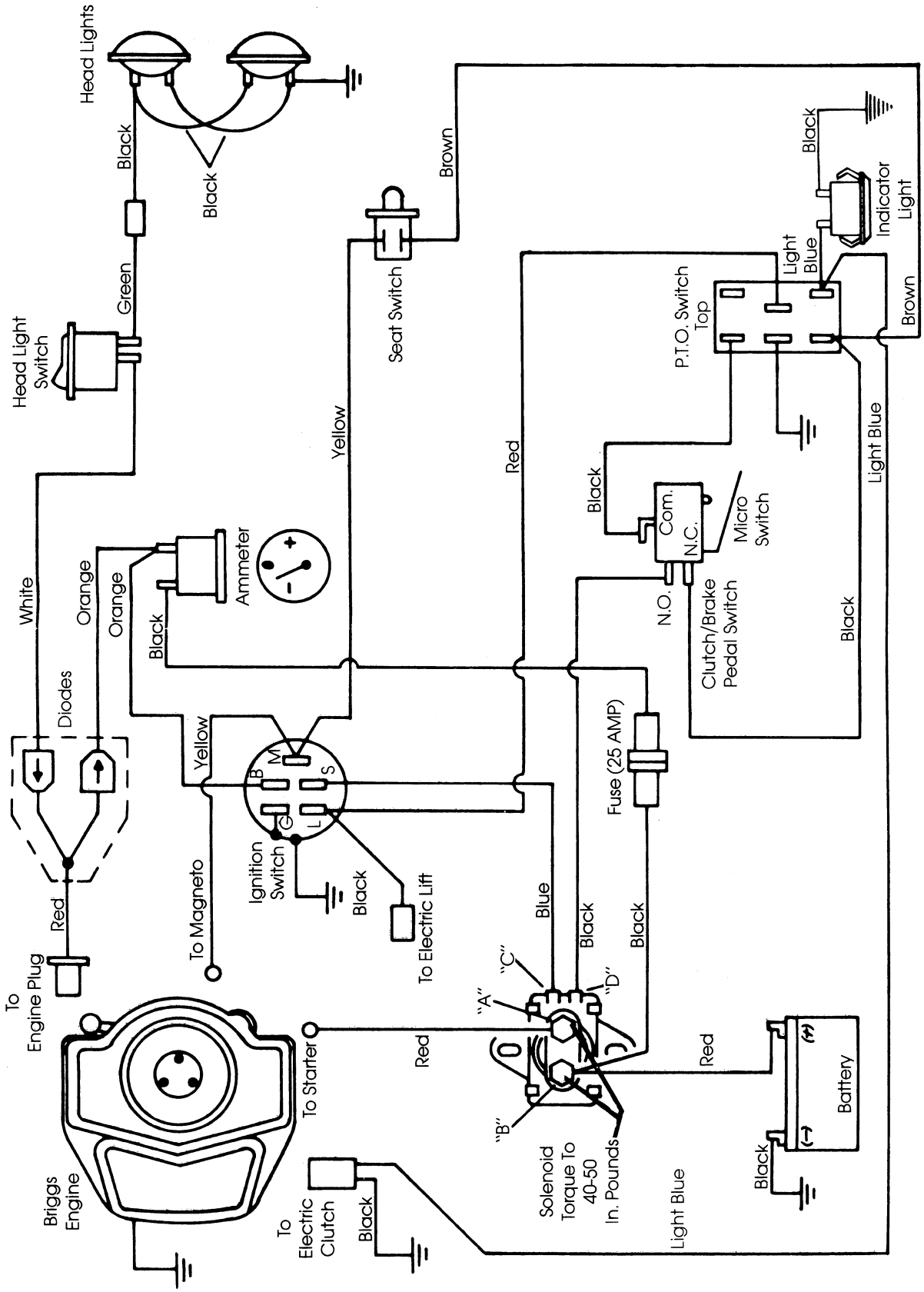

WIRING DIAGRAM MODEL 09GN2152

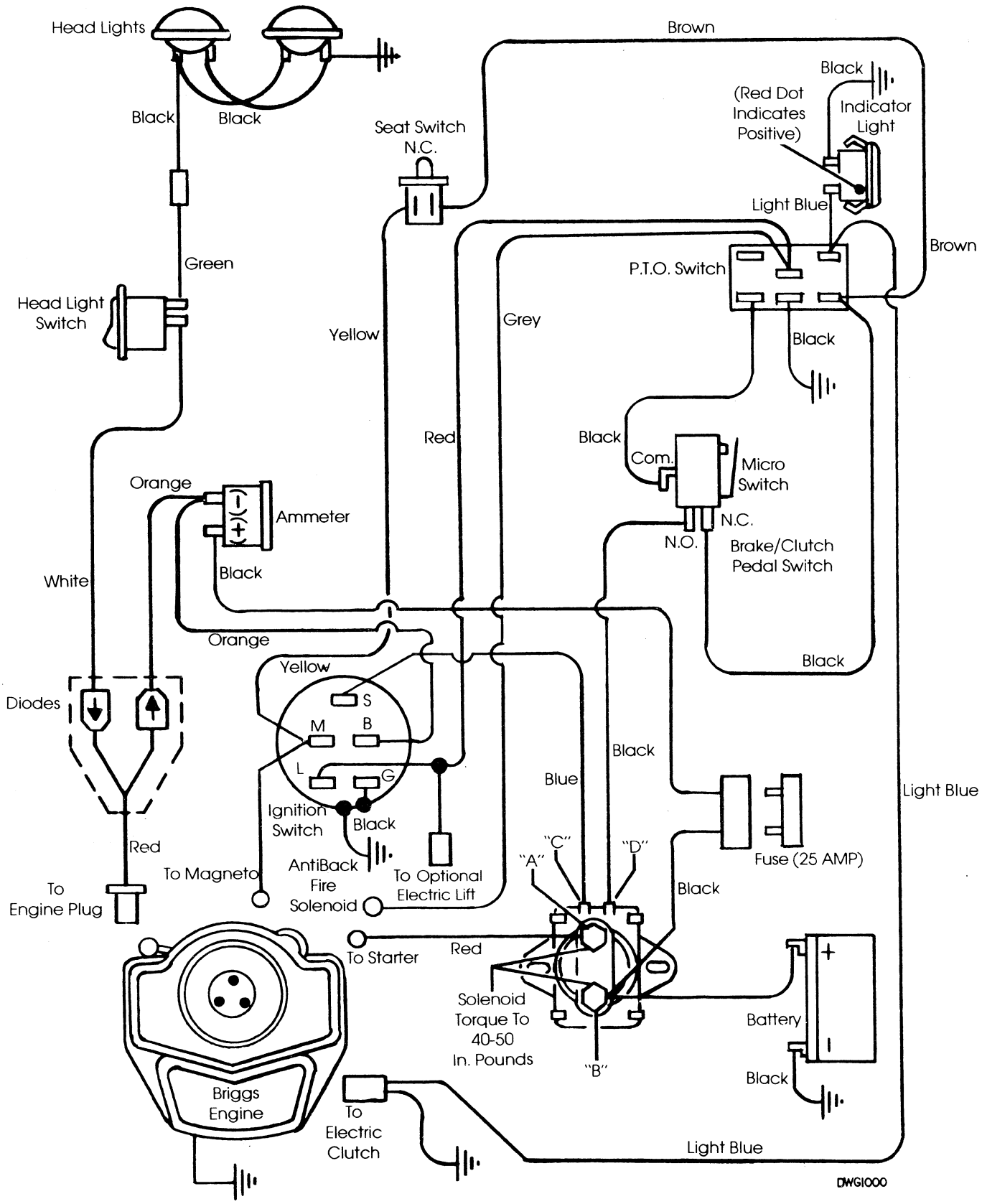

WIRING DIAGRAM MODEL 09GN2153

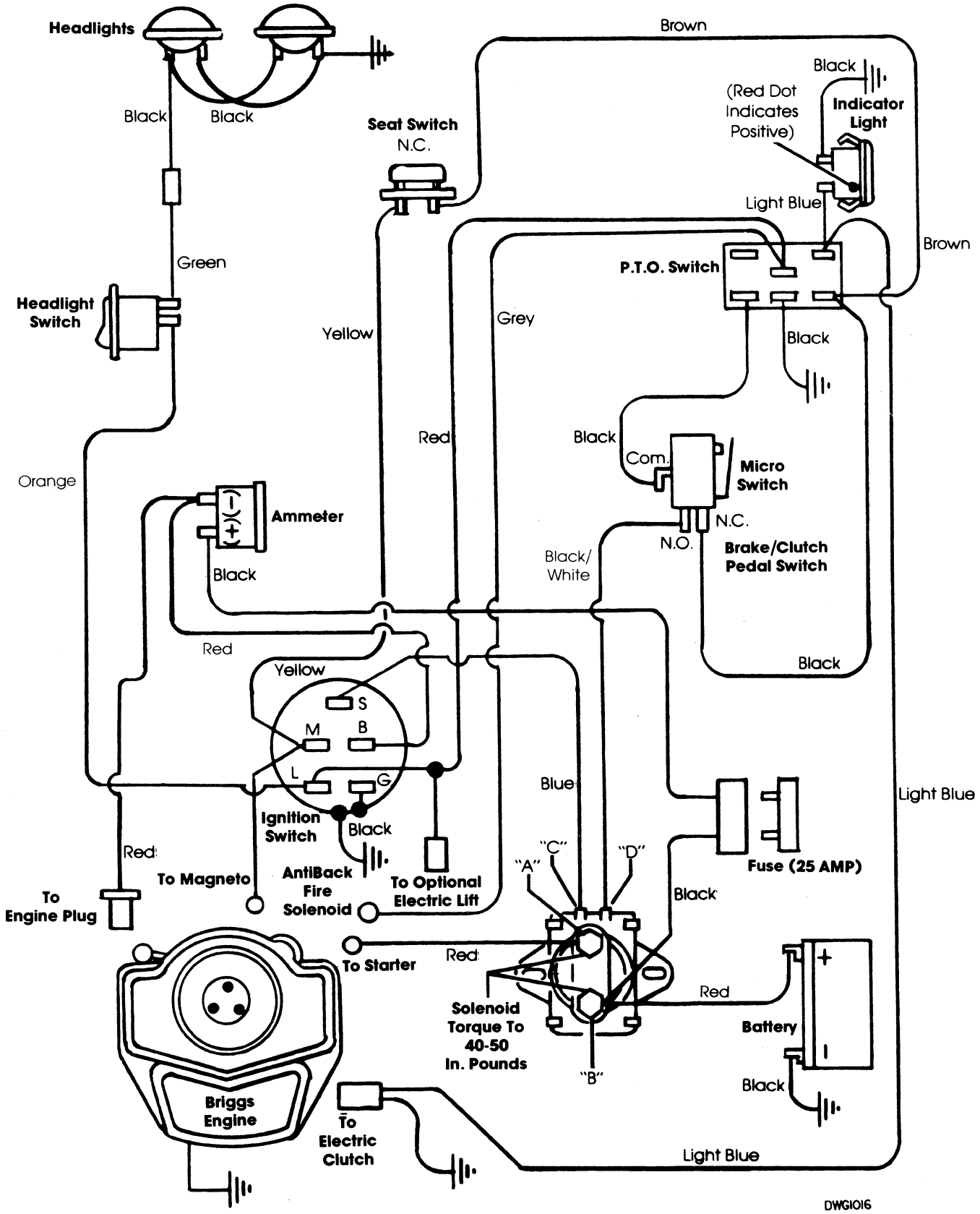

WIRING DIAGRAM MODEL 09GN2154

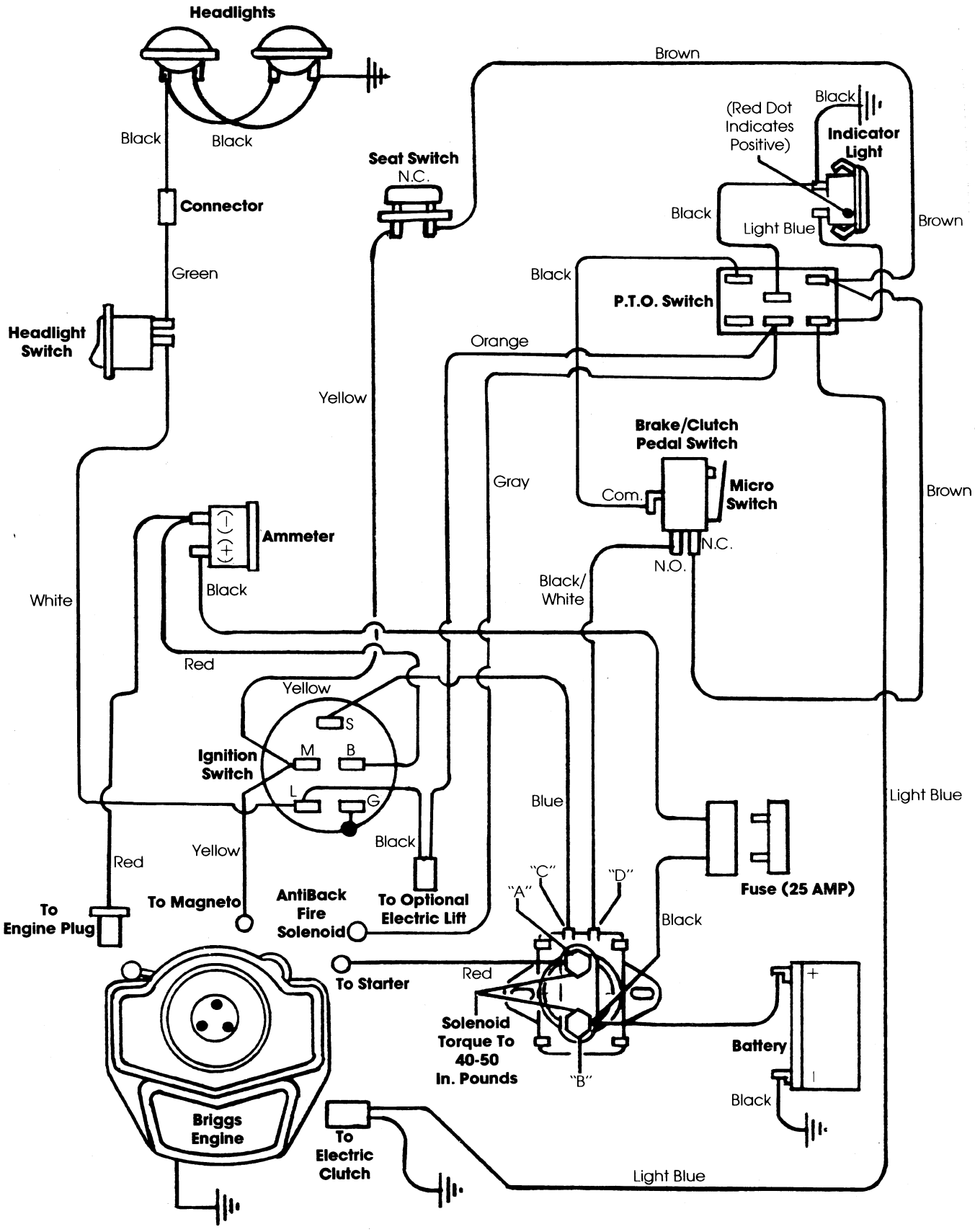

WIRING DIAGRAM MODEL 09GN2155

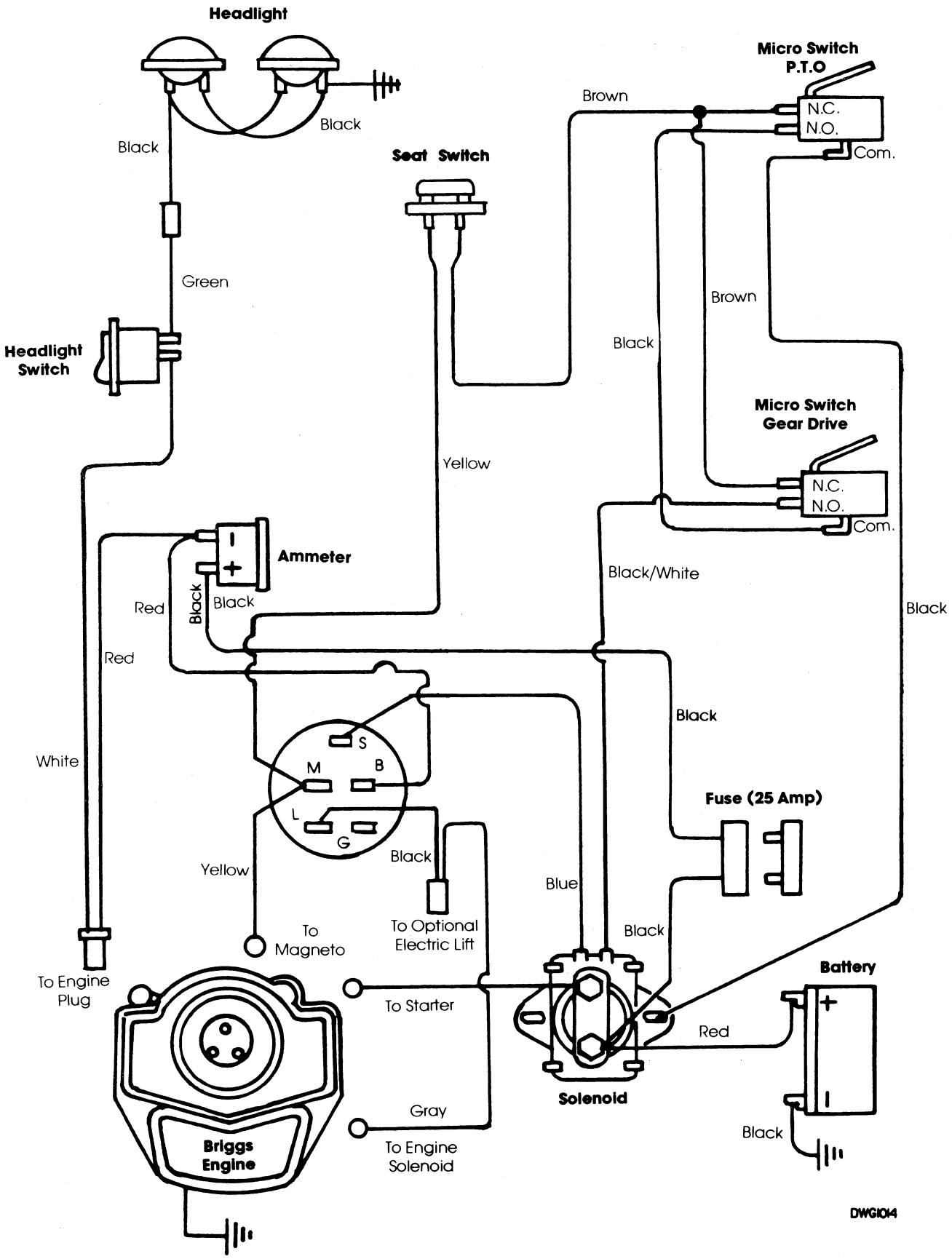

WIRING DIAGRAM MODEL 09GN2198

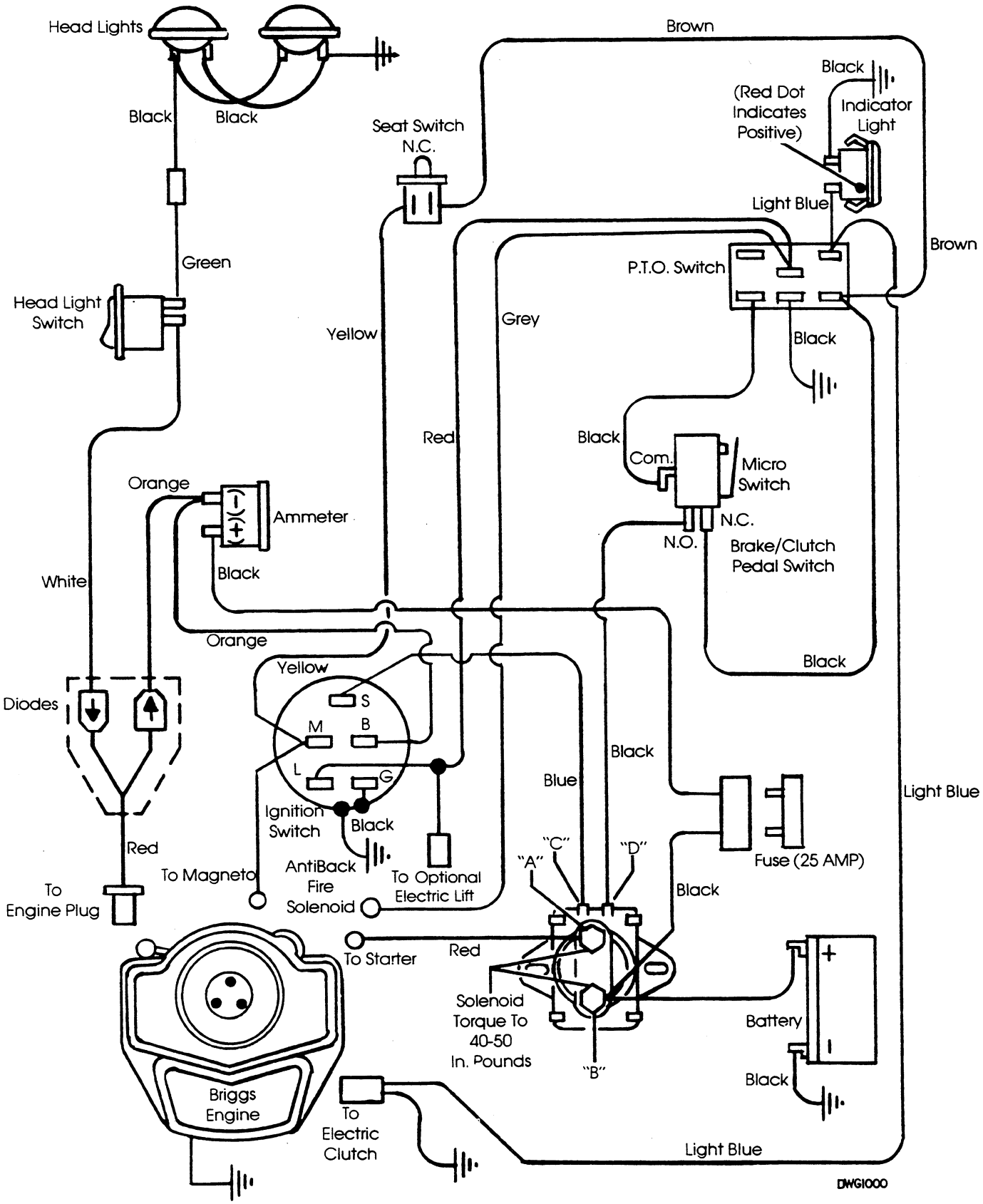

WIRING DIAGRAM MODEL 09GN2199

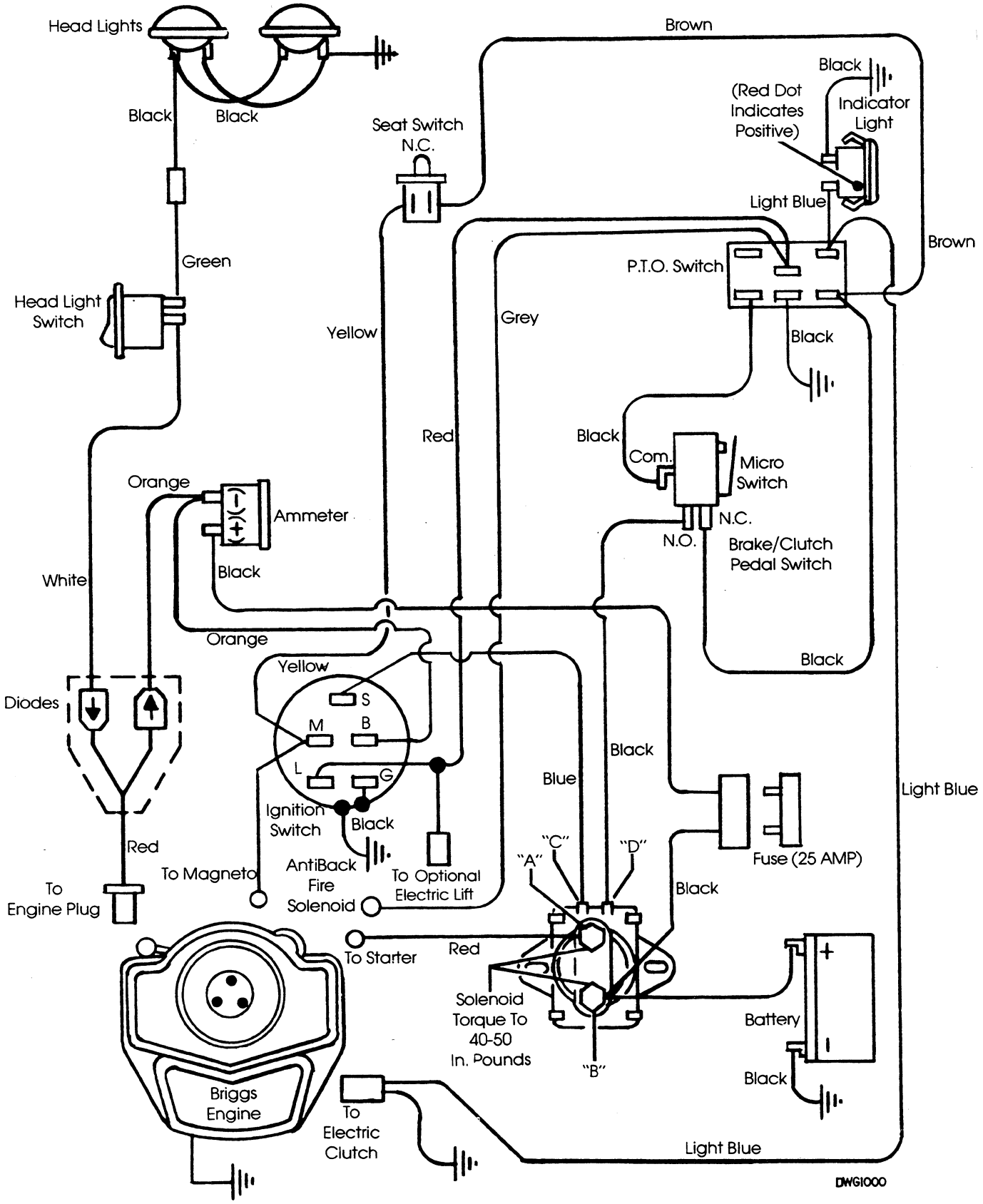

WIRING DIAGRAM MODEL 9607430

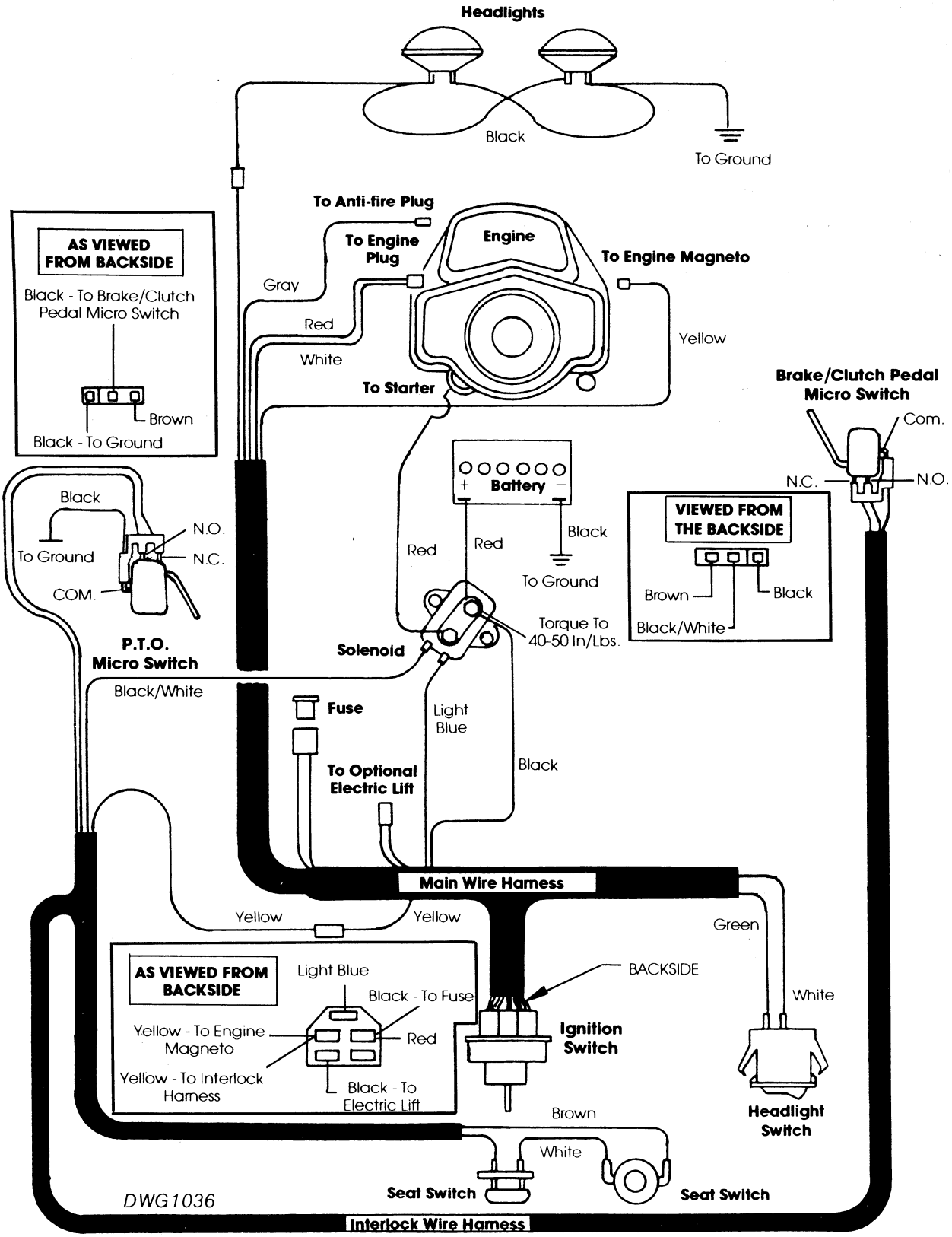

WIRING DIAGRAM MODEL 9607431

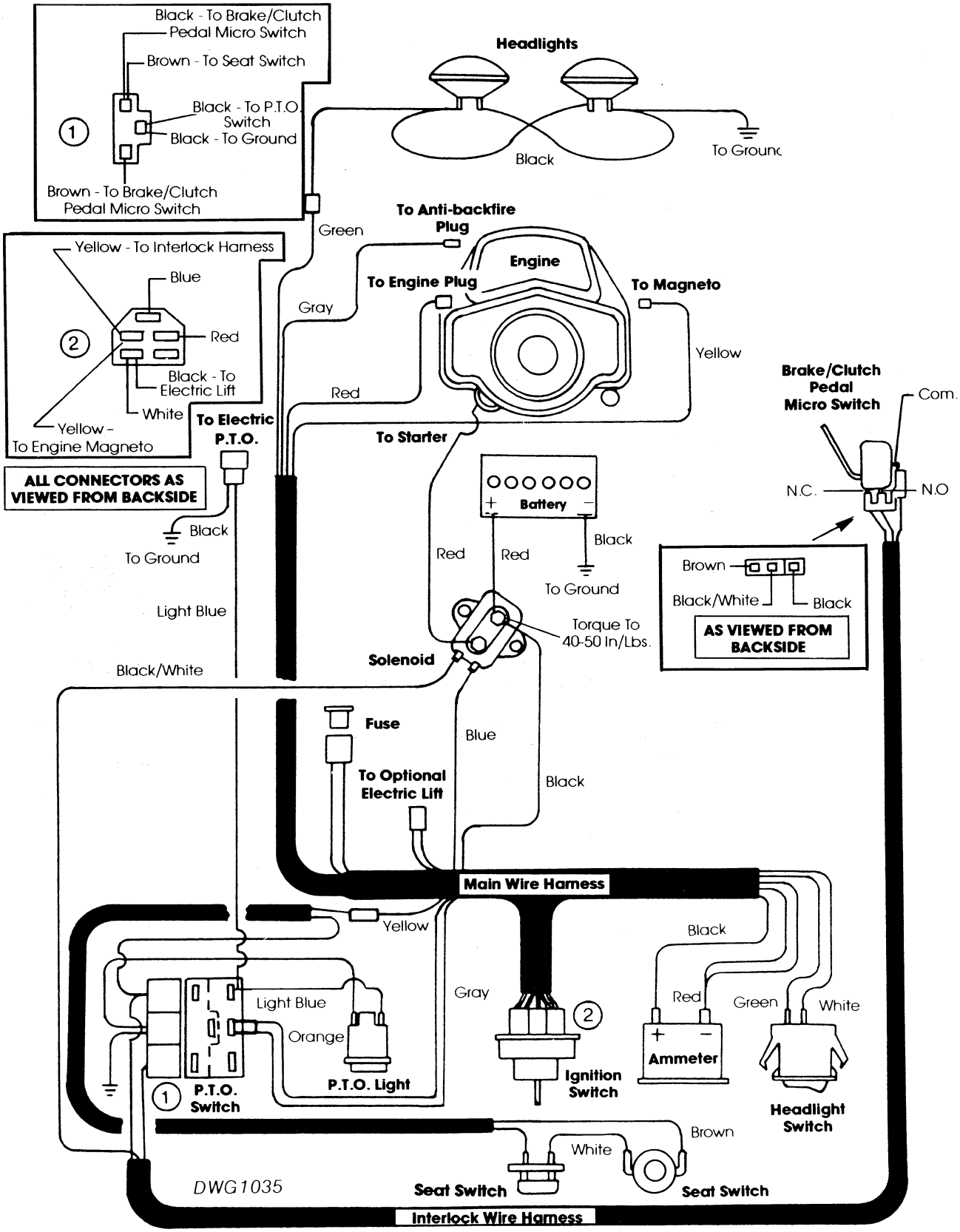

WIRING DIAGRAM MODEL 9607432

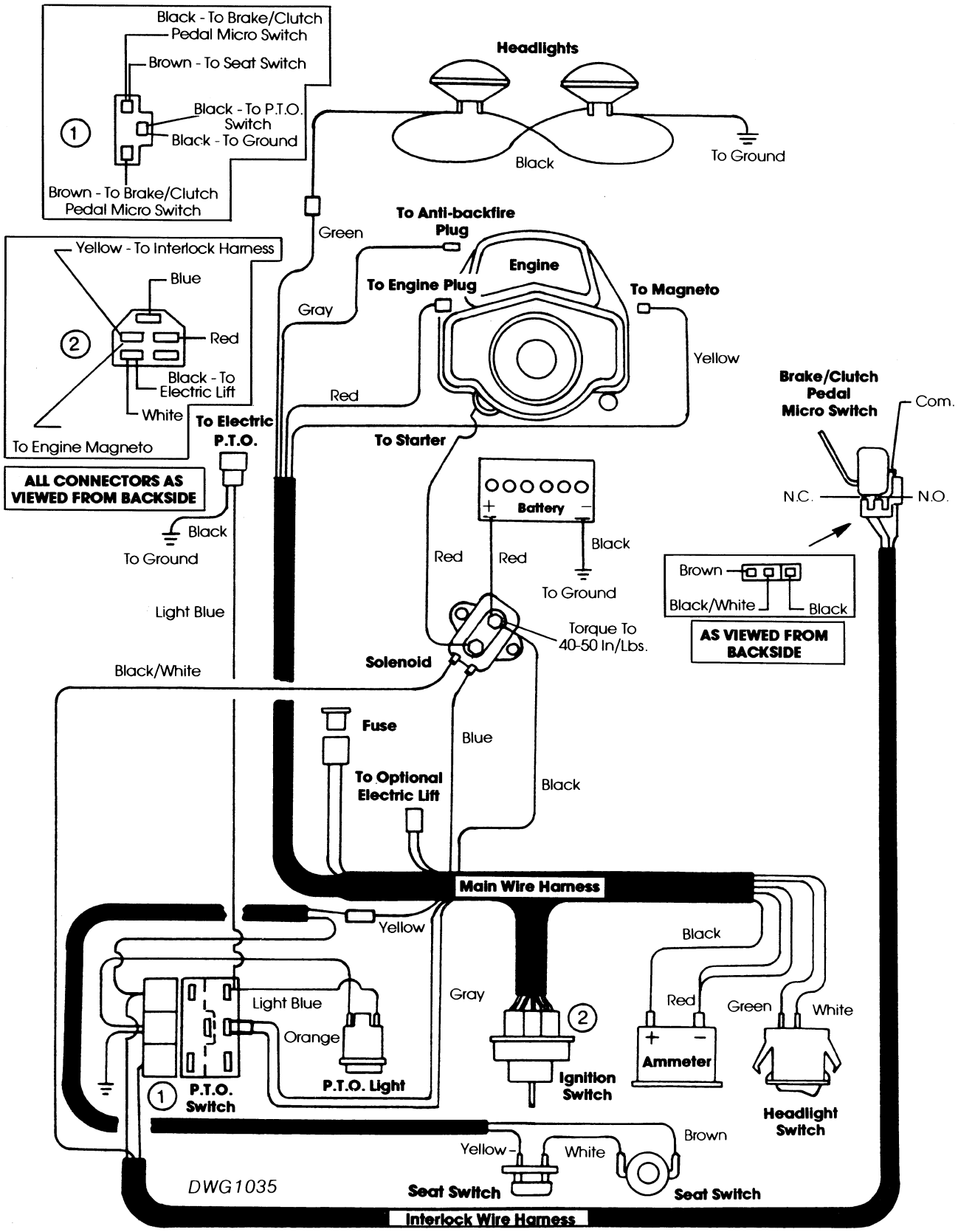

WIRING DIAGRAM MODEL 9607481

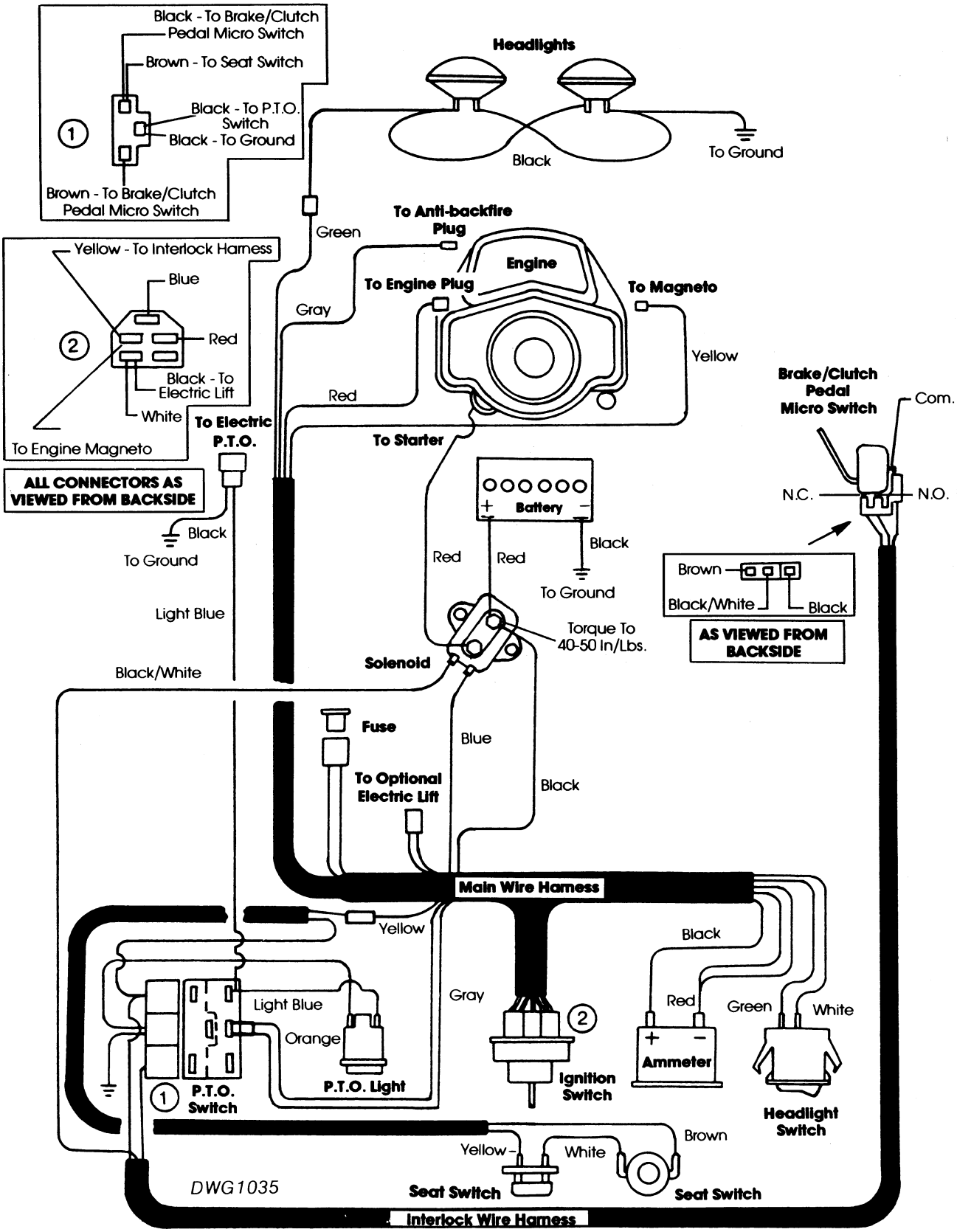

WIRING DIAGRAM MODEL 9607482

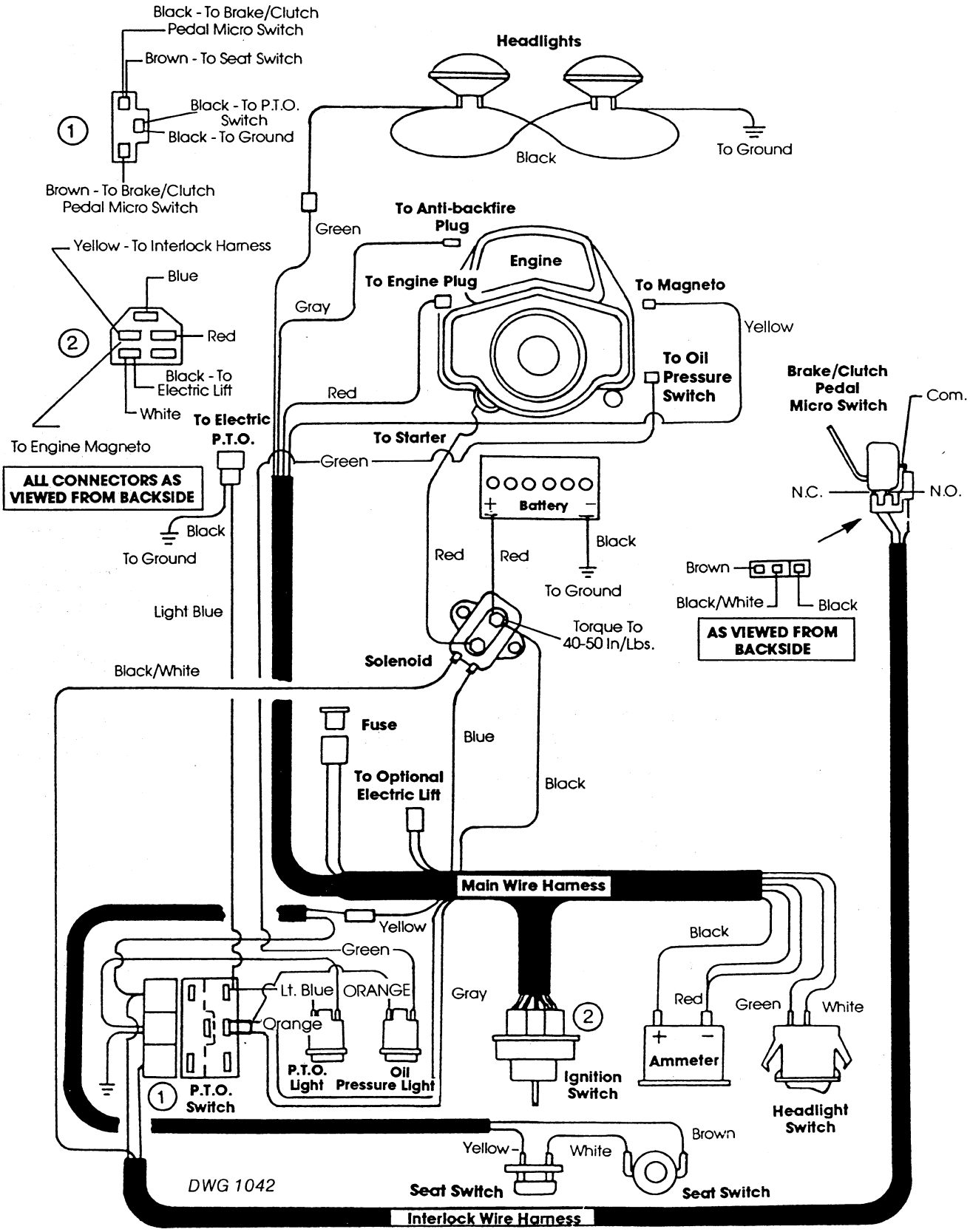

WIRING DIAGRAM MODEL 9800686

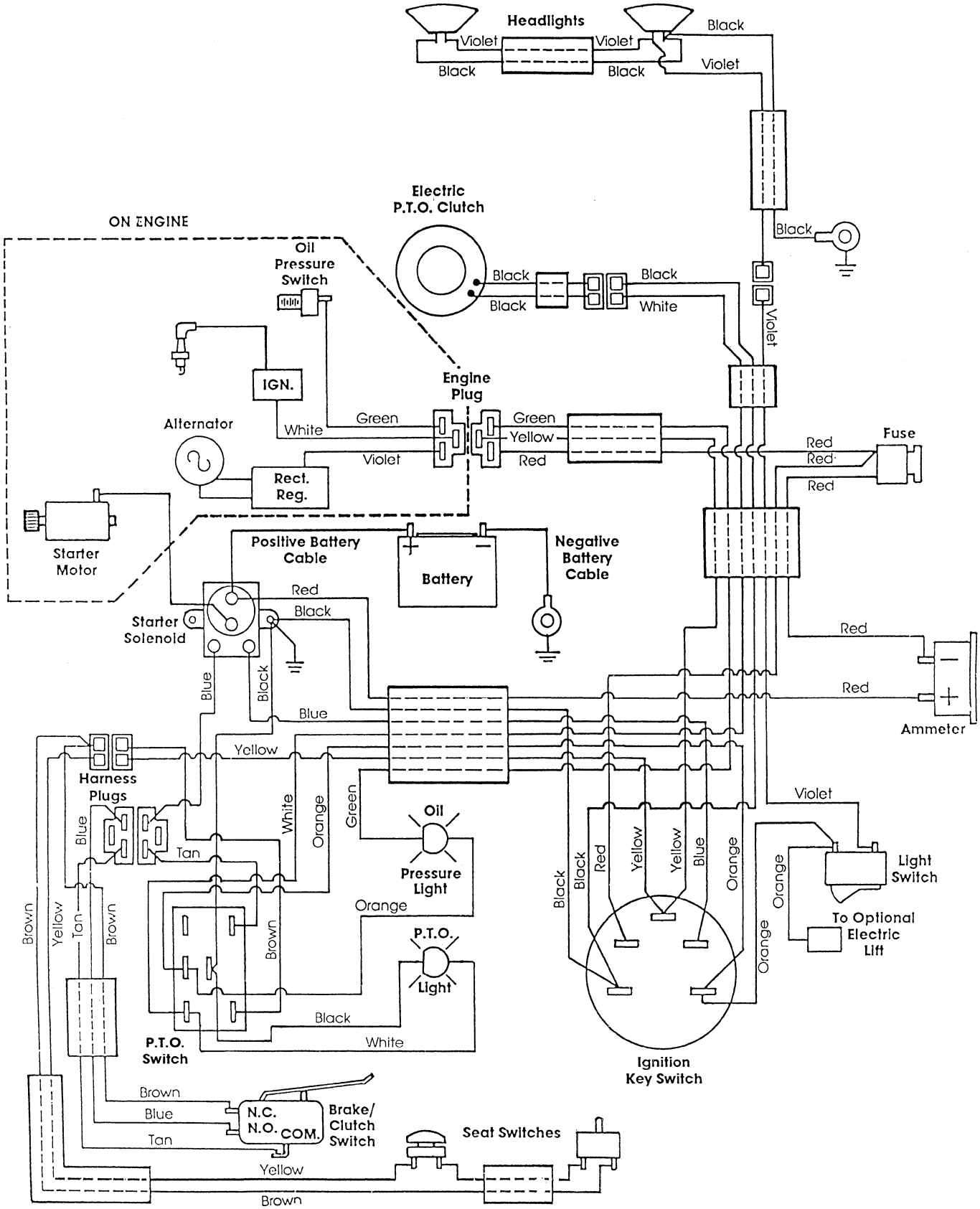

WIRING DIAGRAM MODEL 9800687

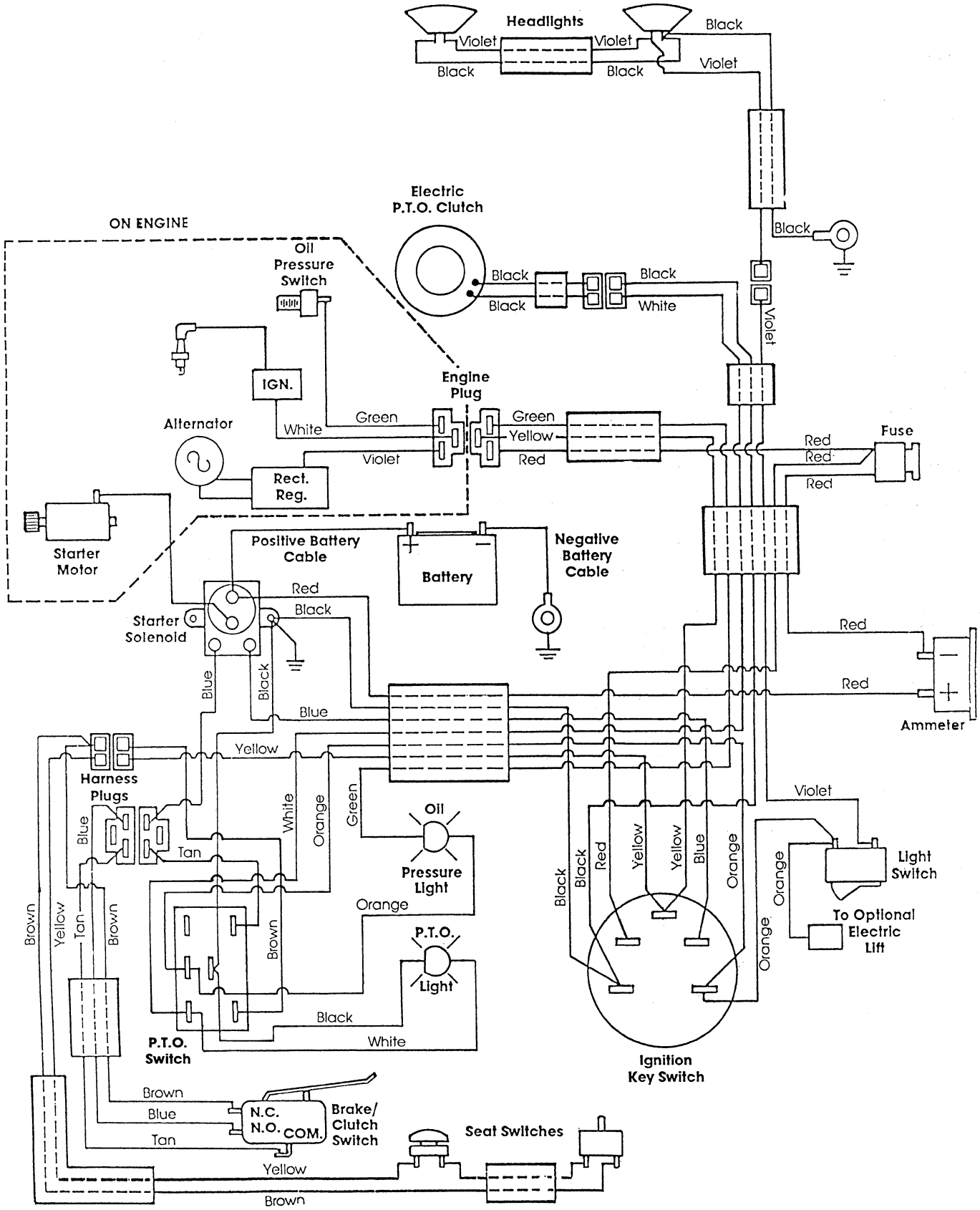

WIRING DIAGRAM MODEL 9800688

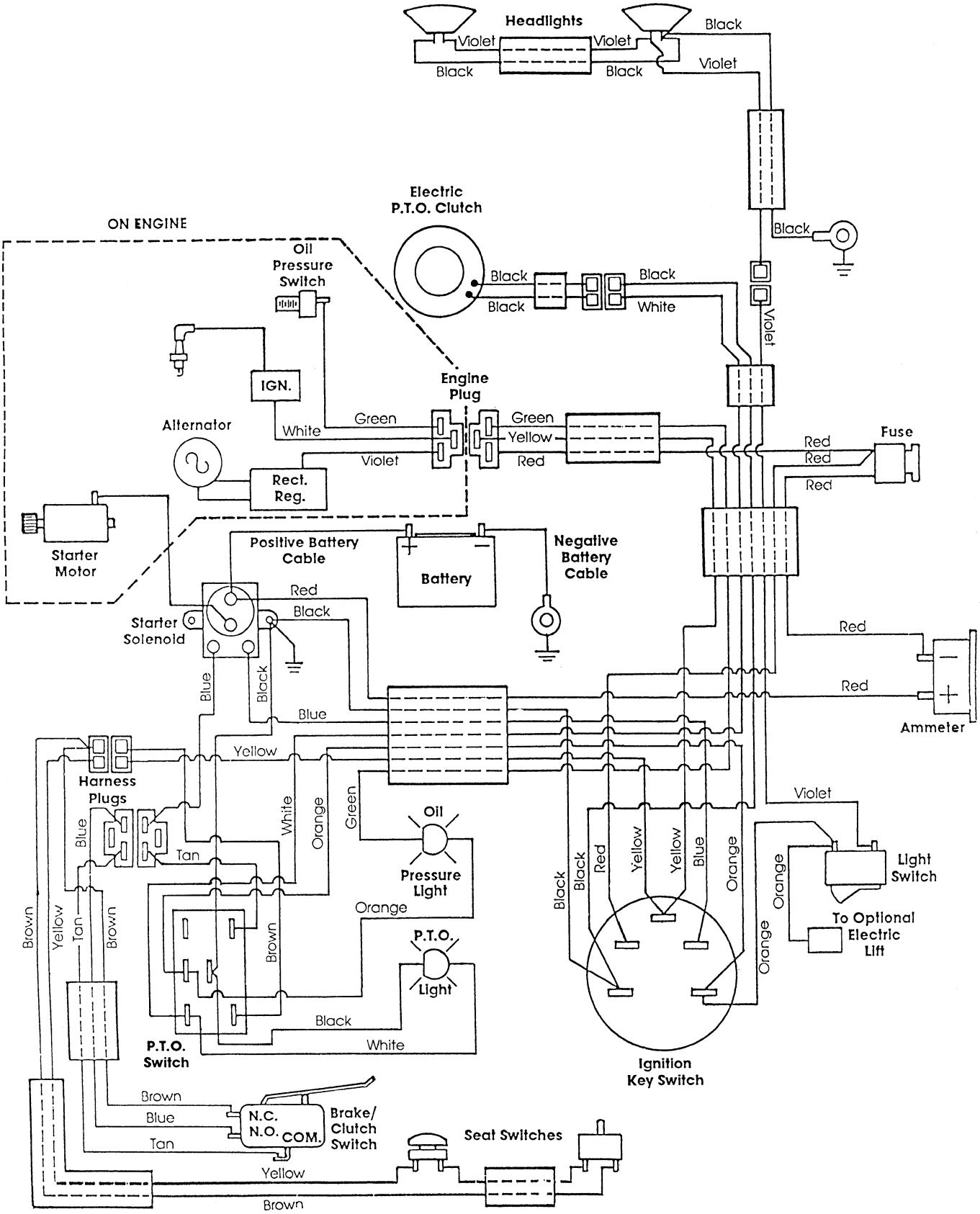

WIRING DIAGRAM MODEL 9801250

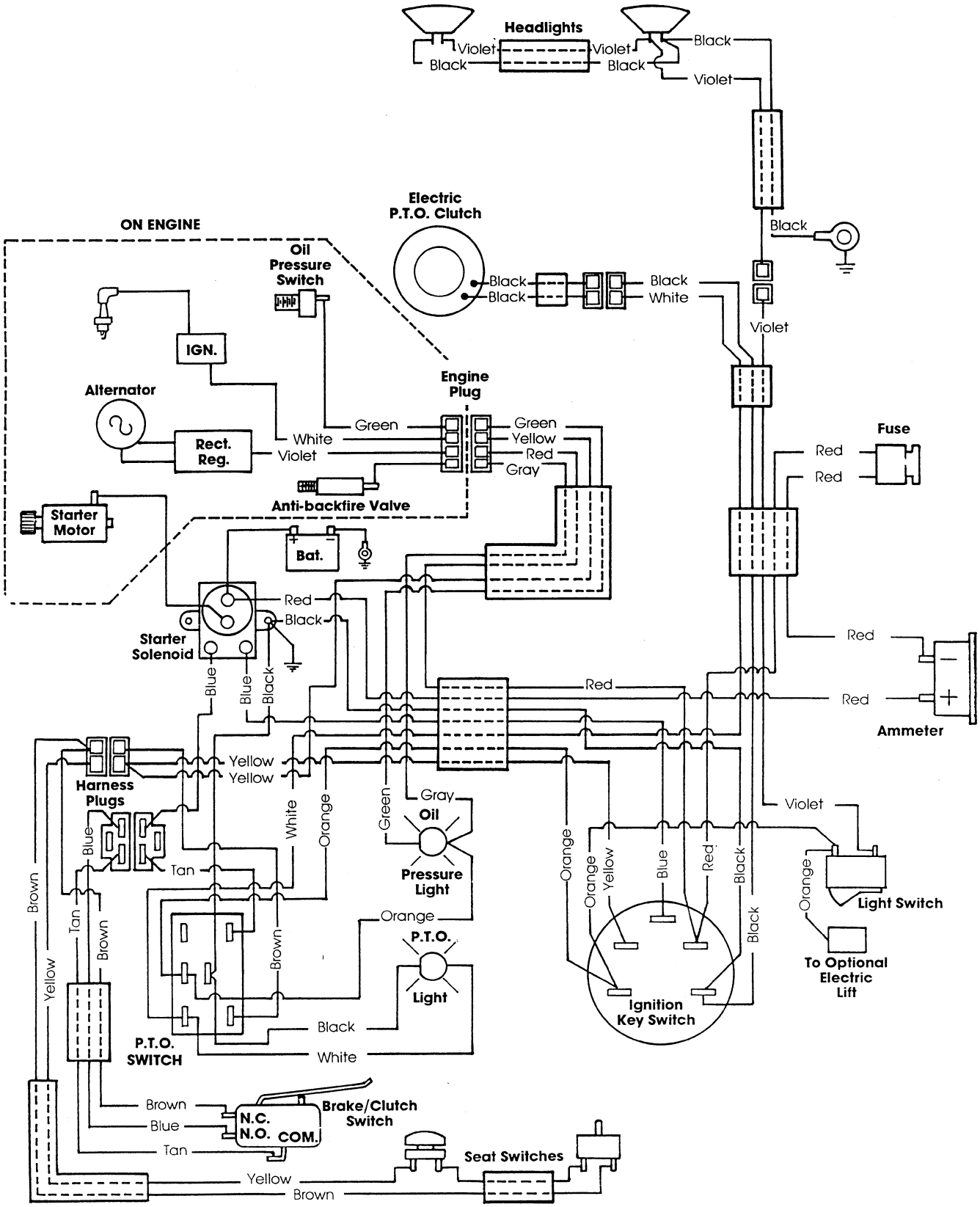

WIRING DIAGRAM MODEL 9809209

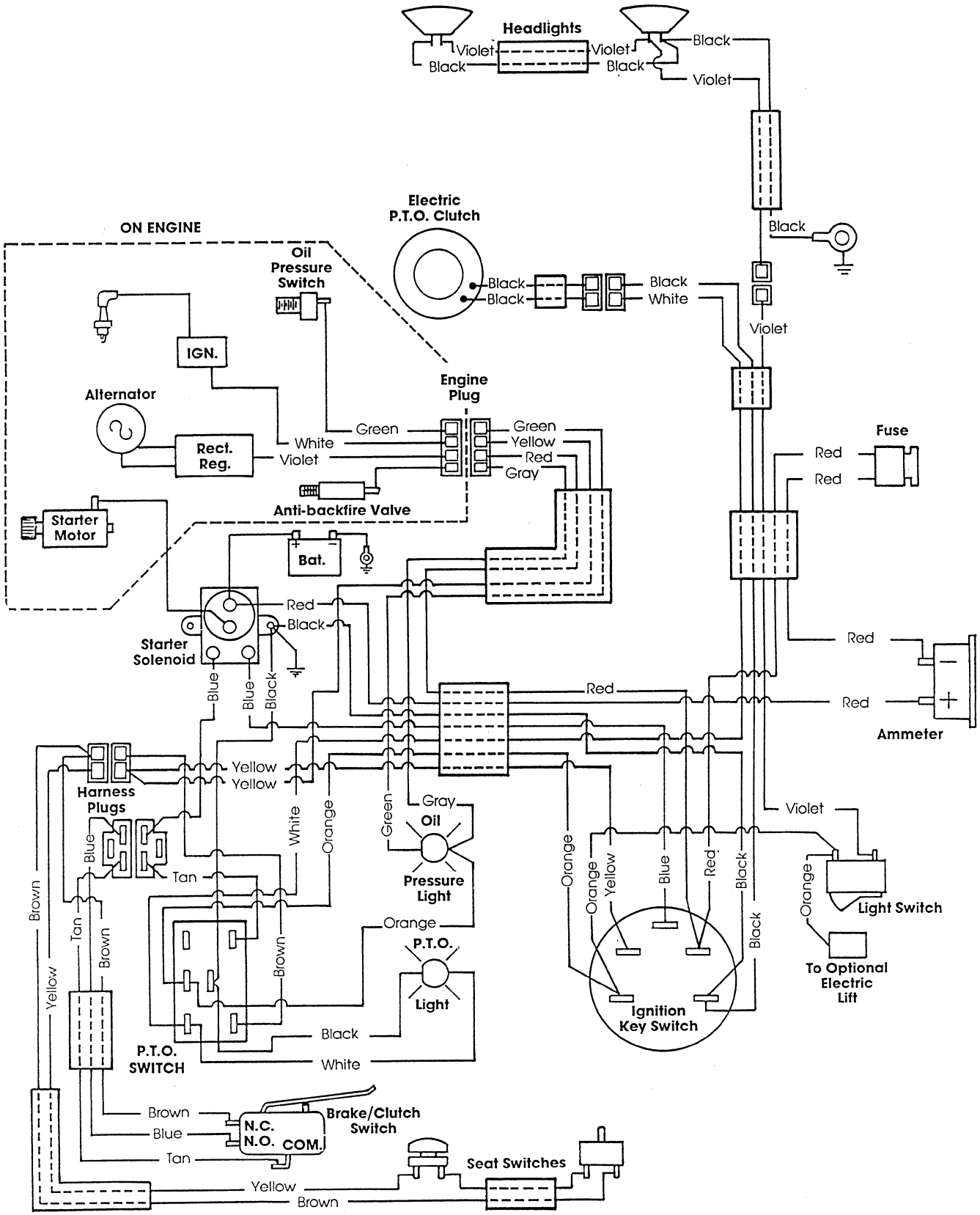

TABLE OF CONTENTS

16 H.P. YARD TRACTOR (Gear Drive)

PAGE

INTRODUCTION AND SAFETY 1

LUBRICATION AND MAINTENANCE 2

ADJUSTMENTS AND SERVICING

- Engine Remove & Replace 3
- Electric (P.T.O.) Clutch/Brake 6
  - Adjustment 6
  - Clutch Coil Check 6
  - Remove & Replace 7
- Fuel Tank Remove & Replace 9
- Transaxle
  - Transaxle Remove & Replace 9
  - Traction Drive Brake Adjustment 10
  - Brake Pad Replacement 10
- Traction Drive Belt
  - Belt Adjustment 11
  - Belt Remove & Replace 11
- Front Axle Remove & Replace 13
- Steering Shaft Removal 14
- Steering Gear Adjustment 15
- Steering Sector Removal 15
- Clutch/Brake Foot Pedal Removal 17
- Clutch Pivot Bracket Removal 18
- Traction Drive Gear Shift Lever Adjustment (Model 09GN2152 only) 19
- Traction Drive Gear Shift Lever Adjustment (Model 09GN2151 only) 19
- Attachment Lift Lever Shaft Removal 20
- Throttle Control Lever Removal 20
- Choke Cable Removal 21
- Electrical System
  - System Functions 22
  - Battery 24
  - Solenoid Check 24
  - Ammeter Check 25
  - Ignition Switch Check 26
  - Interlock Switch System Check 26
  - Headlight Switch Check 28
  - Headlight Replacement 29
  - Fuse Replacement 29
  - P.T.O. Warning Light Check 29
  - Wiring Diagrams ..... 30—30A

TROUBLE-SHOOTING 31

BOLT TORQUE SPECIFICATIONS 32

IMPORTANT: The replacement of any part on this product by other than the manufacturers' authorized replacement part may adversely affect the performance, durability or safety of this product.

The manufacturer reserves the right to make changes on and to add improvements upon its products at any time without notice or obligation. The manufacturer also reserves the right to discontinue manufacture of any product at its discretion at any time.

Notice to Serviceman in the State of California — The engine on this unit is NOT equipped with a spark arresting muffler.

IMPORTANT: USE OR OPERATION OF THIS ENGINE ON ANY FOREST COVERED, BRUSH COVERED, OR GRASS COVERED LAND WITHOUT A STATE APPROVED SPARK ARRESTOR IN EFFECTIVE WORKING ORDER CONSTITUTES A VIOLATION OF THE LAW OF THE STATE OF CALIFORNIA.

YT 16 GEAR DRIVE

INTRODUCTION

This manual contains service and maintenance instructions for Yard Tractors. It has been prepared to provide the information the serviceman needs to correctly service and maintain a Yard Tractor. All sections of this manual should be carefully studied by the serviceman before beginning work on the tractor.

ALL WARNINGS used throughout this manual should be heeded and followed very closely. Failure to obey these rules could result in personal injury or death to yourself or others.

All references made to the left side, right side, front and rear are given from the operator's position.

SAFETY

Safety is No Accident . . . . . Be Alert!

This symbol is used to attract your attention to the safety precautions that should be understood by the serviceman to avoid accidents.

Please read and follow these instructions on safety procedures before servicing the tractor.

PERSONAL CONSIDERATIONS:

1. Never let shop rags, used for cleaning, lay around to become fire hazards.
2. Always use safety glasses when servicing or inspecting the tractor.
3. Do not wear loose fitting clothing that might get caught in moving parts. Also, keep hands and feet away from moving parts.
4. Be certain that the work bench or support being used is strong enough. The weight of the part plus the force applied to it during assembly or disassembly may put a great strain on the bench or support.
5. Use jack stands or blocks to hold up the unit in any potentially dangerous positions required for access. Do not rely only on jack for support.

EQUIPMENT CONSIDERATIONS:

1. Always disconnect spark plug wire and secure away from spark plug. This **must** be performed every time any servicing is done and will prevent accidental starting of engine.
2. Always store gasoline or flammable solvents used for cleaning in closed containers specifically designed for that purpose.
3. Before cleaning, servicing or inspecting tractor, make certain all moving parts have stopped and engine and exhaust assemblies have cooled down.
4. Never operate tractor without proper guards, plates or other safety protective devices in place.
5. Never store tractor with gasoline in the tank, inside a building where fumes may reach an open flame or spark. Allow engine to cool before storing in any enclosure.
6. Disengage power to attachment(s) and stop engine before servicing, repairing or making any adjustments.
7. Disengage power to attachment(s) when transporting or not in use.
8. Take all possible precautions when leaving the vehicle unattended, such as disengaging the power-take-off, lowering the attachment, shifting into neutral, setting the parking brake, stopping the engine and removing the key.
9. Do not change governor setting or over speed the engine.
10. Be certain that any part being removed is properly supported or held to prevent injury or damage.

OPERATIONAL CONSIDERATIONS:

1. Do not start or run the engine indoors. Fumes from engine exhaust can kill.
2. Disengage all clutches and place gear shift lever in neutral before attempting to start engine.
3. Be sure that all parts are securely fastened before starting tractor.
4. Be sure all tools and cleaning materials are removed before starting tractor.
5. If the equipment should start to vibrate abnormally, stop engine and check immediately for the cause. Vibration is generally a warning of trouble.
6. If test running is required, make sure you are thoroughly familiar with the complete operation of the tractor. Know how to stop the tractor.
7. Never operate machine at high transport speeds on slippery surfaces. Use care when backing.
8. Never operate without good visibility or light.

Whenever you see this symbol it means:
ATTENTION! BECOME ALERT! YOUR SAFETY IS INVOLVED!

IDENTIFICATION PLATE LOCATION

The tractor model and serial number identification plate is located on the left side of engine base assembly below the engine. (Fig. 1)

Refer to engine manufacturer's engine literature for location of engine model and serial number.

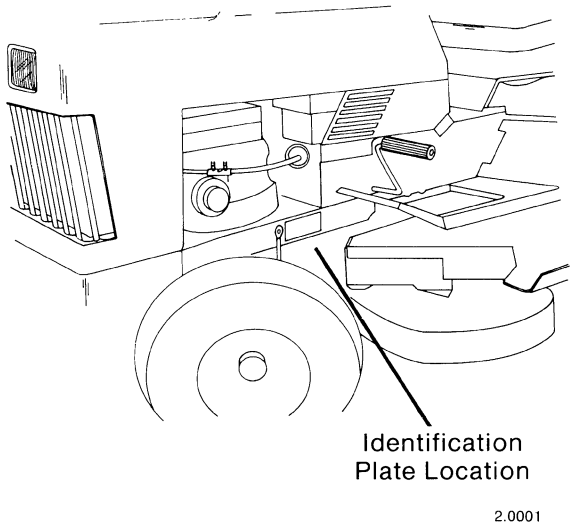

FIG. 1

LUBRICATION AND MAINTENANCE

LUBRICATION:

1. ENGINE - Check engine oil level before each engine operation. Change engine oil every 25 operating hours (more often under dusty conditions). Consult engine manufacturer's service manual for all lubrication and maintenance specifications.

2. GREASE - Every 25 operating hours grease the following lubrication points with NLGI Grade 2 Lithium base EP grease (Ford 1T-M1C137-B). Reference (Figs. 2 and 3).

   NOTE: Clean off grease fittings before attaching grease gun. Grease only until grease comes out of bearings. Wipe off excess grease. Use a pressure type grease gun.

   a. Front Wheels - one fitting located on insides of each front wheel. (Fig. 2)

   b. Tie Bar - one fitting on both ends. (Fig. 2)

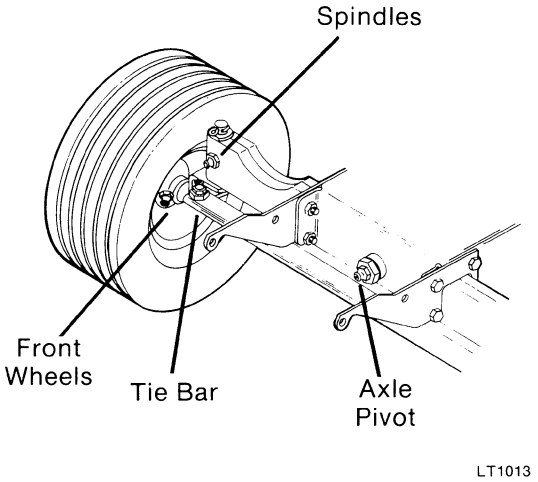

FIG. 2

   c. Spindles - one fitting on both ends of front axle. (Fig. 2)

   d. Axle Pivot - one fitting in center of axle. (Fig.2)

   e. Steering Gears - clean gear teeth on steering gear and gear sector. Apply grease liberally to all gear teeth. (Fig. 3)

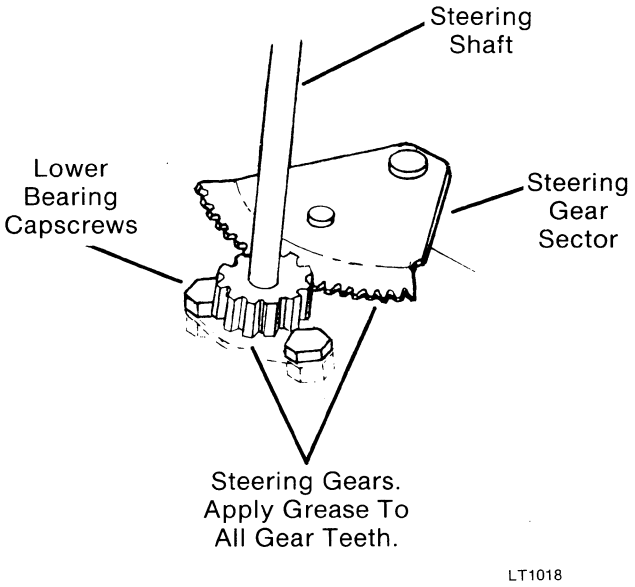

FIG. 3

3. ALL OTHER PIVOT POINTS - Clean all pivot points and linkages and lubricate with SAE No. 30 wt. oil every 25 operating hours.

4. TRANSAXLE - The transaxle is filled for life and should not require additional lubrication. Make periodic visual inspections for damage or leaks every 100 operating hours. If damage or leaks occur, consult transaxle manufacturer's service manual for proper lubrication and maintence specifications.(Lubricant type - E.P. Lithium Grease, 36 ounces).

MAINTENANCE:

1. GENERAL - Make a visual inspection for loose or damaged parts. Check nuts and bolts periodically to insure against looseness caused by vibration or rough handling. Damaged parts should be repaired or replaced.

2. BATTERY - Terminals should be tight and free of corrosion. Battery hold down bracket should be snug over battery. Top of battery should be clean and dry. Check level of electrolyte. Add clean distilled water as needed.

3. BELT - Inspect traction drive belt for cracking, excessive wear and for proper tension. Refer to "ADJUSTMENTS AND SERVICING — TRACTION DRIVE BELT" section to check belt tension.

4. TIRE PRESSURES - Recommended tire pressure for both front and rear tires is 10 p.s.i.

5. P.T.O. WARNING LIGHT - Periodically check the operation of this light. Check as follows:

   a. Turn ignition switch to "RUN" position. (DO NOT start engine)

   b. Move P.T.O. switch to "ON" position. NOTE: Warning light should come on.

   c. Move P.T.O. switch to "OFF" position. NOTE: Warning light should turn off.

   d. Turn ignition switch to "OFF" position.

WARNING: Proper operation of this light is mandatory. Personal bodily injury may occur if light is not operating properly. Reference "ELECTRICAL SYSTEM - P.T.O. WARNING LIGHT" for servicing.

ADJUSTMENTS AND SERVICING

ATTENTION: All procedures listed in this section for adjustments and servicing of the tractor are described with the **attachment removed**. Reference "ATTACHMENTS" section of this service manual for all information specific to the attachment mounted on this tractor.

ENGINE:

1. Refer to Engine Manufacturer's Service Manual for all adjustments and servicing information.

2. Maximum engine RPM high speed, no load, range is 3500 to 3700 RPM.

3. **Engine Removal —**

WARNING: To avoid accidental starting, remove spark plug wires and secure away from spark plugs. Turn ignition switch "OFF".

WARNING: To avoid severe burns, DO NOT attempt this procedure when engine is hot. Wait for engine and muffler to cool down before proceeding.

A. Before this procedure is performed, the attachment should be removed from this tractor as outlined in "ATTACHMENT"section of this service manual.

B. Loosen (do not remove) each capscrew securing right and left transaxle pulley belt guides to main frame. Swing belt guides out of the way. (Fig. 4)

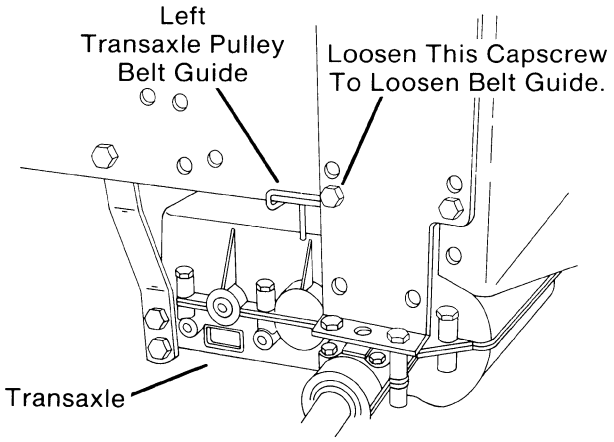

FIG. 4

C. Remove two capscrews securing front engine pulley belt guide between main frame. Remove belt guide. (Fig. 5)

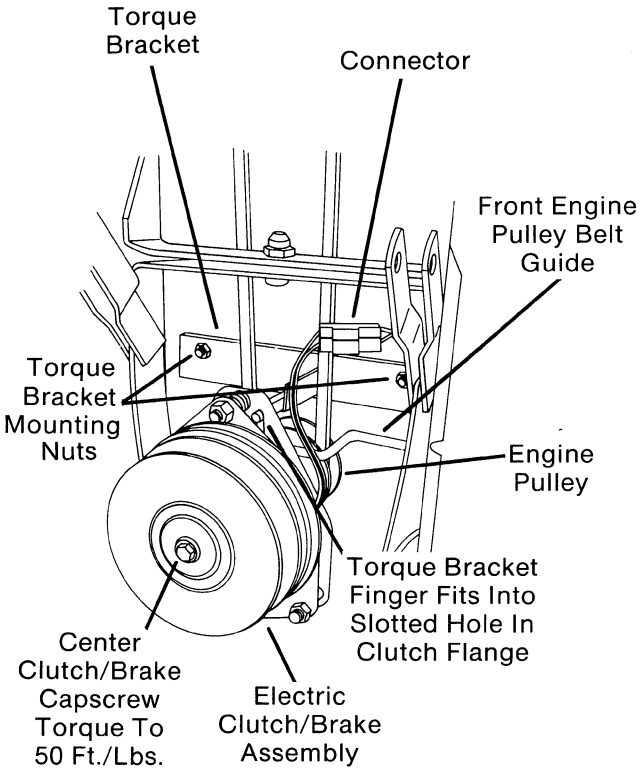

FIG. 5

D. Unclip connector near electric clutch/brake under main frame. (Fig. 5)

E. Depress clutch/brake pedal and set parking brake and work traction drive belt off rear transaxle pulley. Push belt forward and remove belt completely from front engine pulley and over electric clutch.

F. Unclip hood latches and raise hood. Remove capscrew holding hood restraint cable to right front corner of engine shroud.

Carefully pivot hood forward and rest on the floor. IMPORTANT: Place a piece of cardboard or similar padding under hood, on floor, so as not to scratch the paint finish.

G. Disconnect throttle cable at engine, by loosening throttle cable clamp screw far enough so that cable can be removed. Unhook cable end from throttle speed control lever. (Fig. 6)

H. Loosen choke cable clamp screw, on left side of carburetor, (Fig. 6) just far enough so choke cable can be removed. Remove end of cable from choke lever.

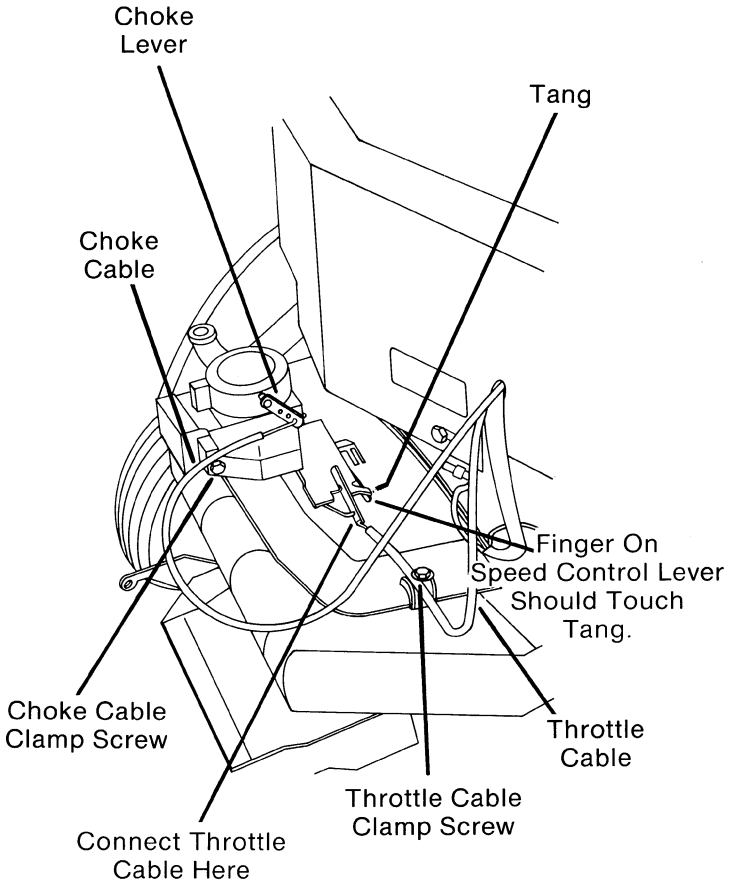

FIG. 6

I. Disconnect the following lead wires at engine:

a. Green headlight wire at connector clipped to lower left front corner of hood. See (Fig. 7)

b. Red Charging lead wire at engine plug at left front corner of engine. (Fig. 7)

c. Red starter cable lead at starter (left rear corner of engine). (Fig. 7)

d. Yellow magneto wire at right front corner of engine under air dam. (Fig. 8)

J. Disconnect both battery cables from battery. Disconnect negative (-) terminal **first**. Loosen (do not remove) two thread forming screws on each side of battery, securing battery in place. (Fig. 9) Remove battery from tractor.

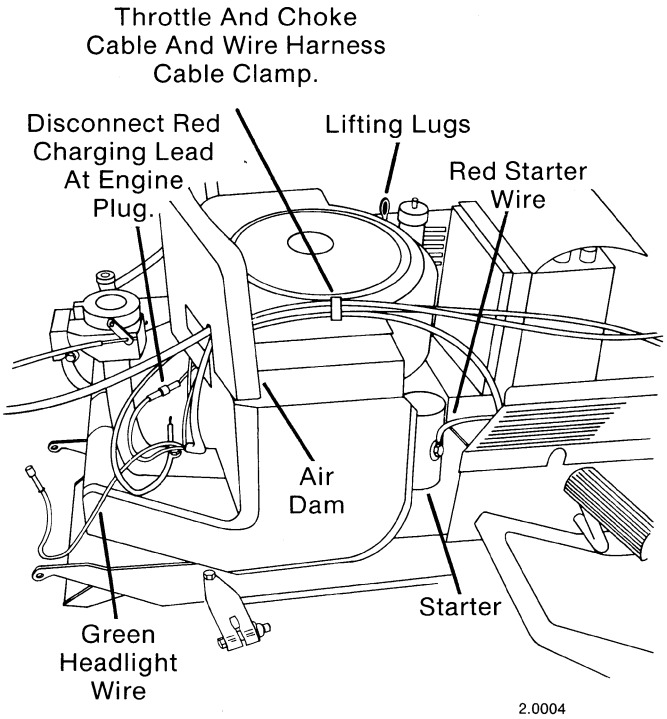

FIG. 7

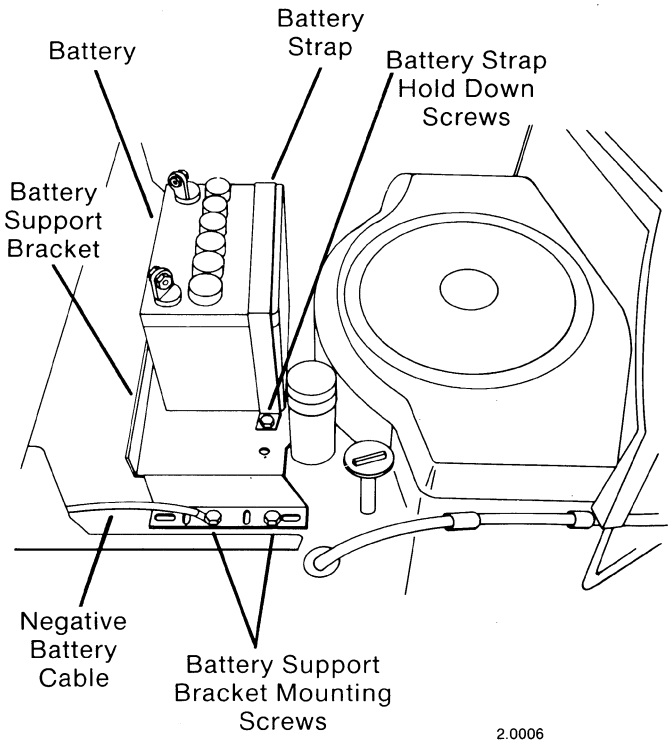

FIG. 9

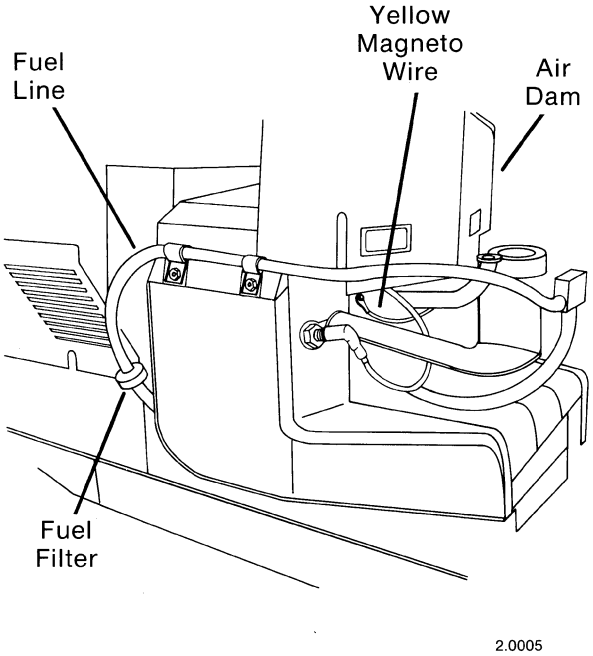

FIG. 8

Remove four thread forming screws holding battery support bracket to main frame. (Fig. 9) Remove support bracket. NOTE: Right rear screw also secures negative (-) battery cable in place. Replace cable on the same screw when reassembling.

K. Remove self tapping screw securing throttle cable and wire harness through cable clamp on top of engine shroud (Fig. 7). Pull cables and wire harness out through plastic grommet in air dam.

L. Disconnect fuel line at fuel filter. (Fig. 8) Cap line to prevent leakage. Remove fuel filter from fuel line and inspect or replace filter per engine manufacturer's specifications.

M. Remove capscrew and washers through center of electric clutch/brake and pull clutch off crankshaft adapter. (Fig. 5)

NOTE: When replacing electric clutch on crankshaft, torque on center capscrew should be 50 ft./lbs. Note, also, the position of torque bracket finger through slotted hole in clutch bracket for reassembly. (Fig. 5)

N. Remove two nuts and lockwashers securing electric clutch torque bracket, under main frame, to two rear engine mounting capscrews. Remove torque bracket. (Fig. 5)

NOTE: When torque bracket is removed one flat washer on each mounting capscrew will fall out. When reassembling replace flat washers between torque bracket and main frame.

NOTE: When reassembling torque bracket, the black ground wire from connector for electric clutch, should be fastened onto right rear engine mounting capscrew before nut and lockwasher are used to secure torque bracket.

O. Remove two nuts and lockwashers from front engine mounting studs and two rear engine mounting capscrews and lockwashers.

P. Use suitable hoist, (two lifting lugs provided on top of engine) (Fig. 7) or at least two people (to avoid excessive strain) and lift engine from its mounting.

Q. Reverse above procedures to install engine until you reach the point of connecting the throttle and choke cables. Then follow these adjustment procedures:

a. THROTTLE CABLE - Move throttle control lever up to the "FULL FAST" detent position. (Fig. 10) Attach end of throttle cable to speed control lever and pull cable to the left until finger on speed control lever touches tang. (Fig. 6) Slip cable under clamp and tighten cable clamp screw.

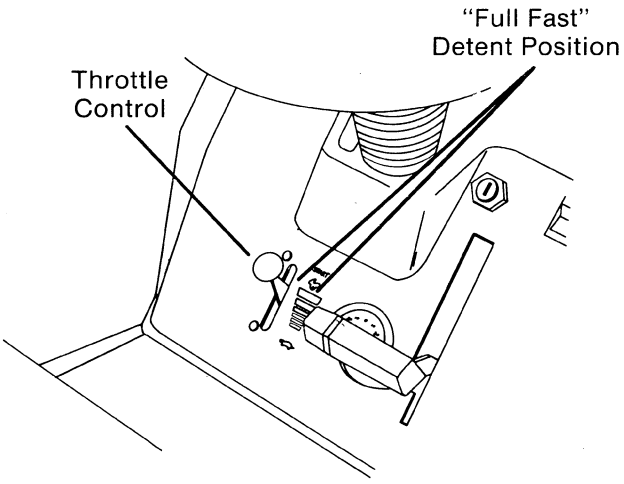

FIG. 10 2.0032

b. CHOKE CABLE - Remove air cleaner for this adjustment. Attach end of cable to choke lever on carburetor. (Fig. 6) Slip cable under cable clamp screw and lightly tighten screw. With choke control knob on instrument panel pushed in all the way, butterfly in carburetor throat should be fully open. Pull choke control knob out (minimum 1⅛"), butterfly in carburetor throat should be fully closed. Move cable under clamping screw until adjustments are achieved, then fully tighten choke cable clamp screw against choke cable.

4. ELECTRIC (P.T.O.) CLUTCH/BRAKE —

Adjustment —

A. To check adjustment, use a .012" feeler guage.

WARNING: To avoid accidental starting, move P.T.O. switch to "OFF" position and turn ignition switch "OFF" and remove key.

B. Insert feeler gauge through access slot and into air gap between armature and rotor. (Fig. 11) There should be some resistance felt, on both sides of gauge, when clutch/brake is properly adjusted. Repeat this step in at least three locations on clutch/brake. If feeler gauge cannot be inserted into air gap or gap is too large, follow procedures below to adjust.

C. If P.T.O. switch is turned "ON" and attachment does not drive, turn all three locknuts equally ¼ turn **clockwise**. (Fig. 11) This will decrease air gap and allow clutch surfaces to engage. Recheck gaps with feeler gauge, if more adjustment is required, continue turning locknuts equally ¼ turn until correct adjustment is achieved.

D. If P.T.O. switch is turned "OFF" and attachment does not stop or no resistance is felt in step "B", turn all three locknuts equally ¼ turn **counterclockwise**. This will incease air gap and allow clutch surfaces to disengage. Recheck gap with feeler gauge, if more adjustment is required, continue turning locknuts equally ¼ turn until correct adjustment is achieved.

Clutch Coil Check —

If electric (P.T.O.) clutch is not engaging properly to bring deck up to speed or does not drive at all, perform the following test to check the clutches field coil.

WARNING: To avoid accidental starting, remove spark plug wires and secure away from spark plugs.

A. Using a voltmeter, check voltage at clutch wire connector. Connect positive (+) probe to

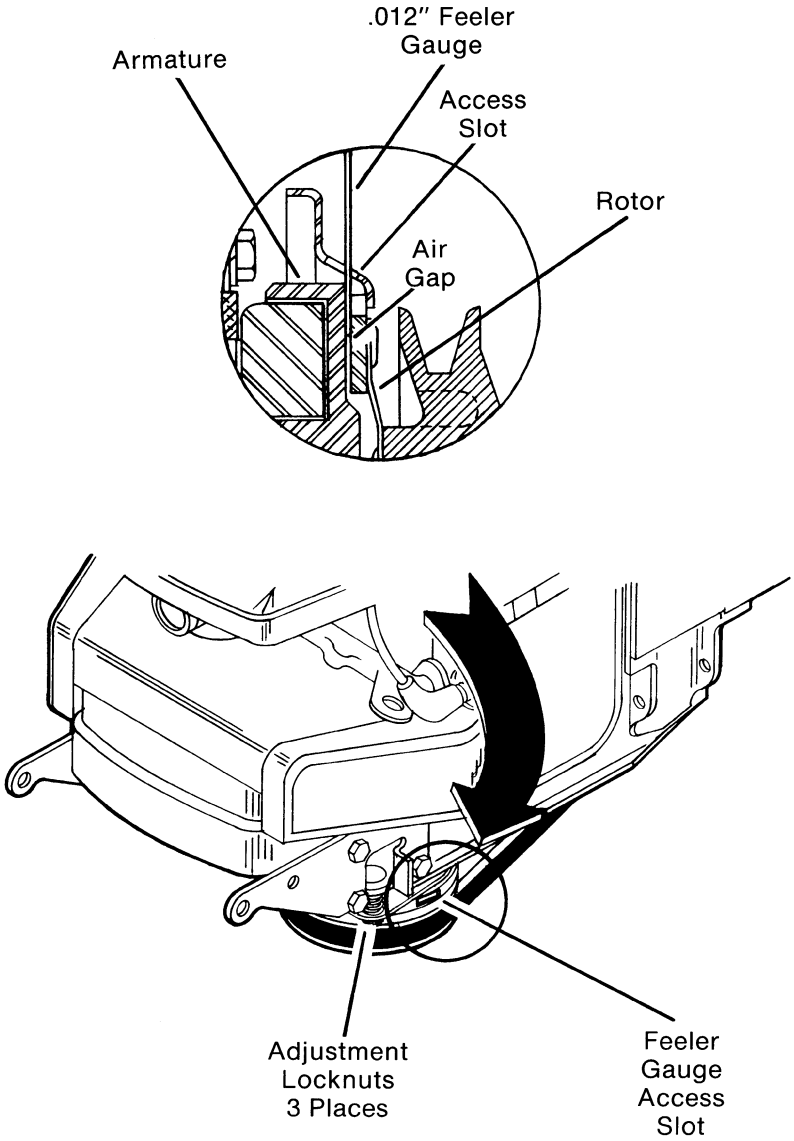

FIG. 11

light blue wire in connector. Connect negative (-) probe to ground (black wire connected to right nut holding torque bracket in place). Turn ignition switch to the RUN position and engage P.T.O. switch. Voltmeter should register more than 10 volts. If voltmeter does not register a reading, look for broken wires or connections. If voltmeter registers less than 10 volts check battery charge and/or fluid level. If battery does not hold a charge of at least 10 volts, replace battery. If voltmeter reads over 10 volts disengage P.T.O. switch and turn ignition switch OFF. Disconnect clutch wire connector and check resistance of clutch field coil as follows:

B. Using an ohmmeter, connect one probe to one of the connectors in the clutch wire connector and connect the other probe to the other connector. With ohmmeter set to **low** ohm scale, a normal resistance reading should be between 2.31 and 3.12 ohms. A reading outside these values indicates faulty coil and P.T.O. clutch should be replaced as a complete unit when under warranty and field assembly should be repaired or replaced when out of warranty.

C. If P.T.O. clutch still does not engage properly, reset "ELECTRIC (P.T.O.) CLUTCH/-BRAKE - ADJUSTMENT.

D. Reconnect clutch wire connector.

Removal and Replacement —

WARNING: To avoid accidental starting, move P.T.O. switch to "OFF" position and turn ignition switch "OFF" and remove key.

A. Remove P.T.O. drive belt, if still attached to electric clutch/brake pulley.

B. Disconnect wire connection at connector near electric clutch/brake under main frame.

C. Remove capscrew and washers through center of electric clutch/brake and pull clutch off crankshaft adaptor. (Fig. 12)

NOTE: If clutch is difficult to remove, use a pry bar between the frame and the top of the clutch assembly and pry clutch off; **or** if clutch has a cast pulley a pulley puller can be used above the upper pulley flange to remove clutch.

D. Electric (P.T.O.) clutch/brake assembly should be replaced as a complete unit when under warranty and repaired or replaced when out of warranty. Reverse above procedures to reassemble.

NOTE: When reassembling clutch onto crankshaft, lightly oil crankshaft and torque center capscrew to a torque of 50 ft./lbs.

NOTE: Torque bracket finger should fit through slotted hole in clutch bracket when reassembled. (Fig. 12)

NOTE: Check armature/rotor air gap by following procedures for ELECTRIC (P.T.O.) CLUTCH/BRAKE - ADJUSTMENT.

IMPORTANT: After proper air gap has been set and attachment has been reassembled onto tractor, **new** clutch/brake must be burnished to extend life of clutch/brake. Proceed as follows:

a. Position gear shift lever in NEUTRAL.

b. Start engine, and put throttle in "FULL FAST" position.

c. Turn P.T.O. switch ON and OFF **six** times, engaging and disengaging attachment.

NOTE: Allow attachment to come to a complete stop between ON—OFF cycles.

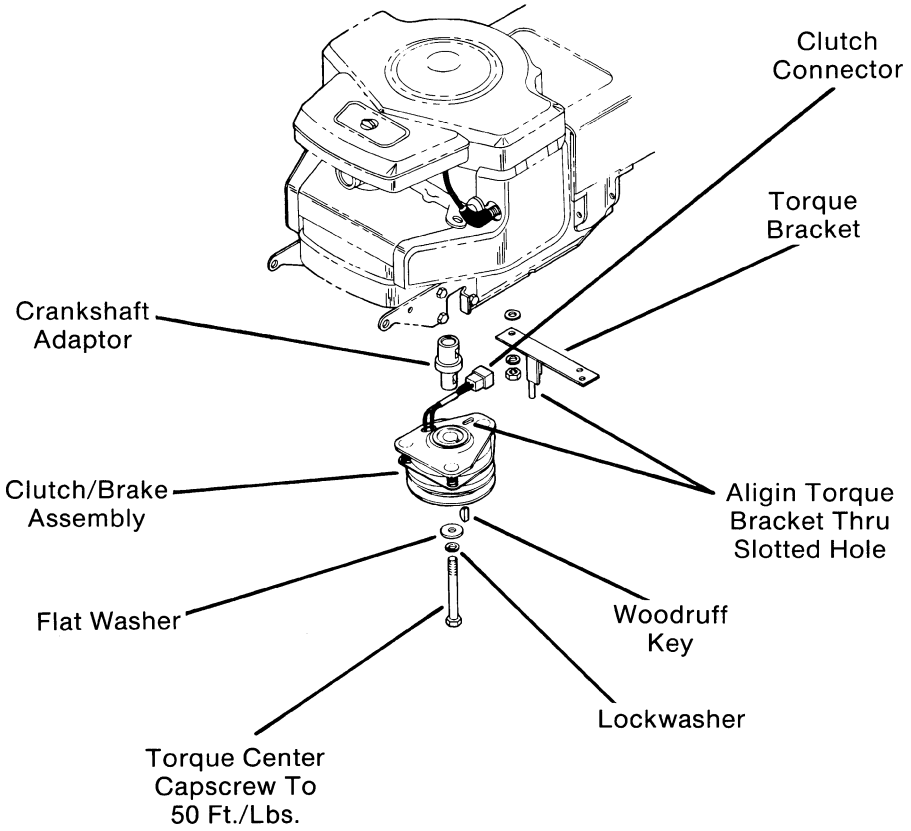

FIG. 12

Product: New Holland Ford 09GN Series,960 Series 980 Series Yard Tractor Service Repair Manual
Full Download: https://www.arepairmanual.com/downloads/new-holland-ford-09gn-series960-series-980-series-yard-tractor-service-repair-manual/

5. **FUEL TANK REMOVAL —**

A. Follow all procedures under "ENGINE REMOVAL" to remove engine.

B. Then slip fuel tank forward and remove from its mounting.

C. Service fuel tank as required and reverse all procedures under "ENGINE REMOVAL" paying special attention to "NOTES" for throttle and choke adjustment.

TRANSAXLE:

1. Transaxle Removal and Replacement —

WARNING: To avoid accidental starting, remove spark plug wires and secure away from spark plugs.

A. Before this procedure is performed, the attachment should be removed from this tractor as outlined in "ATTACHMENT" section of this service manual.

B. Loosen (do not remove) each capscrew securing right and left transaxle pulley belt guides to main frame. Swing belt guides out of the way. (Fig. 4)

C. Depress clutch/brake pedal and set parking brake and work traction drive belt off transaxle pulley. Depress clutch/brake pedal again to release parking brake.

D. Remove cotter pin attaching speed control link to gear select lever at front of transaxle. See (Fig. 13 or 25A)

E. Remove cotter pin attaching brake adjustment rod to brake arm at transaxle disc brake. (Fig. 13) Detach brake adjustment rod from brake arm.

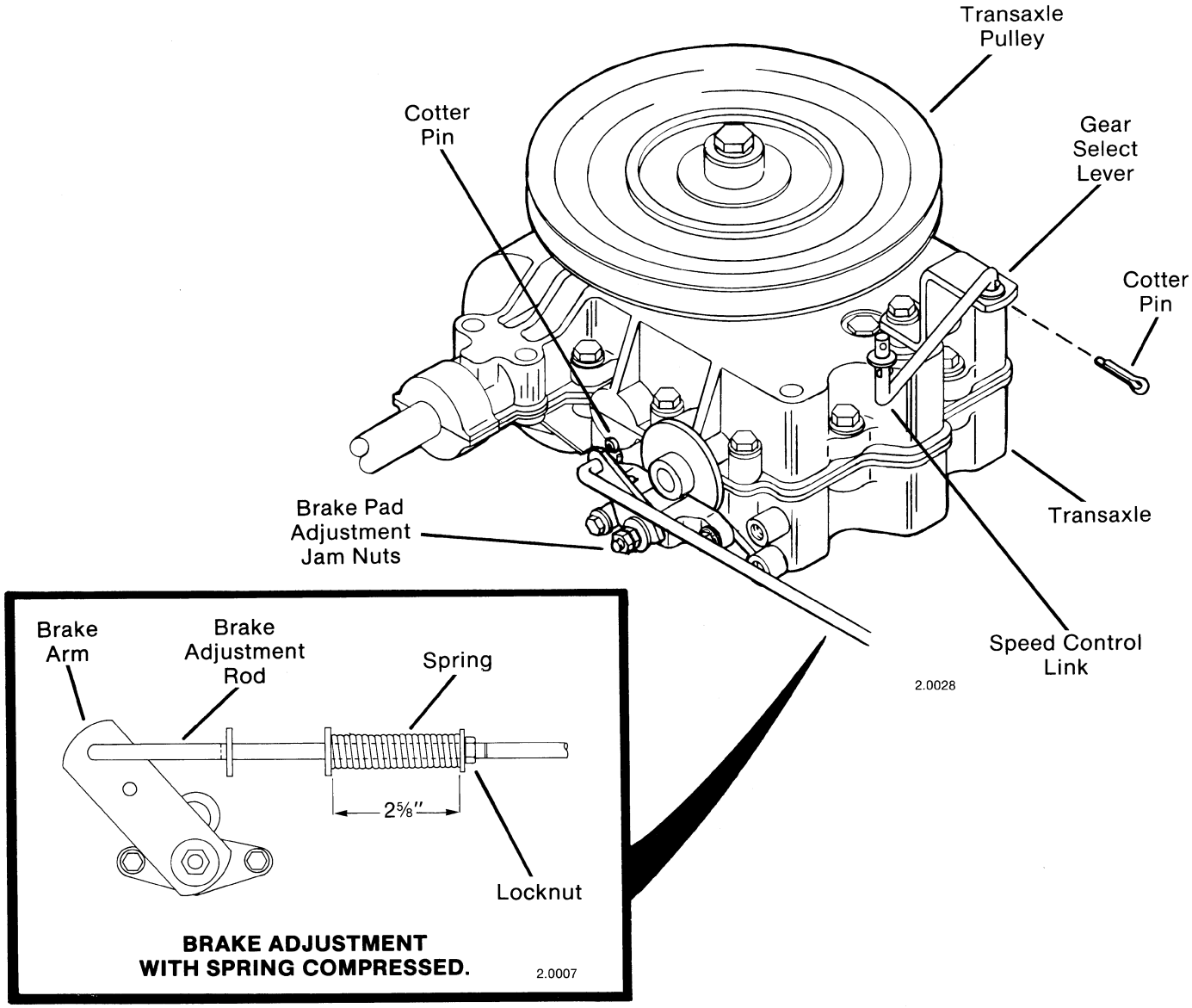

FIG. 13

Sample of manual. Download All 131 pages at:
https://www.arepairmanual.com/downloads/new-holland-ford-09gn-series960-series-980-series-yard-tractor-service-repair-manual