Product: New Holland TR 96/TR 97/TR 98 Combine Service Repair Manual
Full Download: https://www.arepairmanual.com/downloads/new-holland-tr-96-tr-97-tr-98-combine-service-repair-manual/

Please cut where indicated and insert the label into the plastic pocket on the spine of the binder.

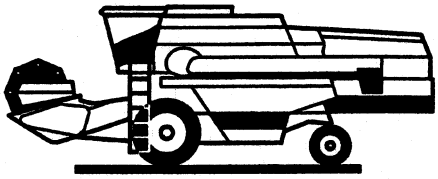

COMBINE REPAIR

TR®96, TR®97, TR®98

Vol. 1

40009630

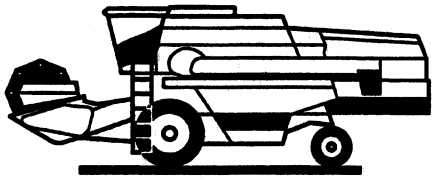

COMBINE REPAIR

TR®96, TR®97, TR®98

Vol. 2

40009630

06901202

Sample of manual. Download All 1866 pages at:
https://www.arepairmanual.com/downloads/new-holland-tr-96-tr-97-tr-98-combine-service-repair-manual/

Product: New Holland TR 96/TR 97/TR 98 Combine Service Repair Manual
Full Download: https://www.arepairmanual.com/downloads/new-holland-tr-96-tr-97-tr-98-combine-service-repair-manual/

TR96, TR97, TR98 COMBINE REPAIR MANUAL CONTENTS

SECTION 0 - GENERAL AND SAFETY INFORMATION
SECTION 1 - ELECTRICAL SYSTEM
SECTION 2- HYDRAULIC SYSTEM
SECTION 3- MONITOR SYSTEM
SECTION 4- SEPARATOR CLUTCH
SECTION 5- ENGINE PTO
SECTION 6- FEEDER
SECTION 7- ROTOR DRIVE
SECTION 8- ROTORS
SECTION 9- ROTOR GEARBOXES
SECTION 10 - CONCAVES
SECTION 11 - SEPARATOR GRATES
SECTION 12 - DISCHARGE BEATER AND GRATE
SECTION 13 - CLEANING FAN
SECTION 14 - CLEANING SHOE
SECTION 15 - CLEAN GRAIN AND FILLING SYSTEM
SECTION 16 - TAILINGS SYSTEM
SECTION 17 - UNLOADING SYSTEM
SECTION 18 - MAIN SHAFT
SECTION 19 - HYDROSTATIC SYSTEM
SECTION 20 - TRANSMISSION
SECTION 21 - POWERED REAR AXLE
SECTION 22 - FINAL DRIVES
SECTION 23 - BRAKES
SECTION 24 - CYLINDERS

Sample of manual. Download All 1866 pages at:
https://www.arepairmanual.com/downloads/new-holland-tr-96-tr-97-tr-98-combine-service-repair-manual/

TR®96, TR®97, TR®98 COMBINE REPAIR MANUAL

INTRODUCTION

This repair manual provides you with the technical information needed to properly service the TR96, TR97, and TR98 combines. By using this repair manual in addition to the operator's manual supplied with the combine, you should be able to correctly service and maintain the combine.

On New Holland equipment, left and right are determined by standing behind the unit, looking in the direction of travel.

This manual describes the procedures of removal, disassembly, reassembly, etc., that have been found to be the easiest and least time-consuming. There may be several other ways of completing the same job, but it has been established that the described methods are best. Modifications to these procedures are your own decision.

Certain hardware on the combine must be tightened to particular torque specifications. If there are no specific torque specifications for the hardware, tighten to the torque listed in the torque charts in this section of the manual.

CAUTION!

CAUTION: PICTURES IN THIS MANUAL MAY SHOW PROTECTIVE SHIELDING OPEN OR REMOVED TO BETTER ILLUSTRATE A PARTICULAR FEATURE OR ADJUSTMENT.

BE CERTAIN, HOWEVER, TO CLOSE OR REPLACE ALL SHIELDING BEFORE OPERATING THE MACHINE.

IMPROVEMENTS

New Holland North America, Inc. is continually striving to improve its products. We reserve the right to make improvements or changes when it becomes practical and possible to do so, without incurring any obligation to make changes or additions to the equipment sold previously.

ALL SPECIFICATIONS SUBJECT TO CHANGE WITHOUT NOTICE.

PRECAUTIONARY STATEMENTS

PERSONAL SAFETY

Throughout this manual and on machine decals, you will find precautionary statements ("CAUTION", "WARNING", and "DANGER") followed by specific instructions. These precautions are intended for the personal safety of you and those working with you. Please take the time to read them.

CAUTION: THE WORD "CAUTION" IS USED WHERE A SAFE BEHAVIORAL PRACTICE ACCORDING TO OPERATING AND MAINTENANCE INSTRUCTIONS AND COMMON SAFETY PRACTICES WILL PROTECT THE OPERATOR AND OTHERS FROM ACCIDENT INVOLVEMENT.

WARNING: THE WORD "WARNING" DENOTES A POTENTIAL OR HIDDEN HAZARD WHICH HAS A POTENTIAL FOR SERIOUS INJURY. IT IS USED TO WARN OPERATORS AND OTHERS TO EXERCISE EVERY APPROPRIATE MEANS TO AVOID A SURPRISE INVOLVEMENT WITH MACHINERY.

DANGER: THE WORD "DANGER" DENOTES A FORBIDDEN PRACTICE IN CONNECTION WITH A SERIOUS HAZARD.

FAILURE TO FOLLOW THE "CAUTION", "WARNING", AND "DANGER" INSTRUCTIONS MAY RESULT IN SERIOUS BODILY INJURY OR DEATH.

MACHINE SAFETY

Additional precautionary statements ("ATTENTION" and "IMPORTANT") are followed by specific instructions. These statements are intended for machine safety.

ATTENTION: The word "ATTENTION" is used to warn the operator of potential machine damage if a certain procedure is not followed.

IMPORTANT: The word "IMPORTANT" is used to inform the reader of something he needs to know to prevent minor machine damage if a certain procedure is not followed.

SAFETY PRECAUTIONS

1. DO NOT ATTEMPT TO LUBRICATE OR MAKE ANY ADJUSTMENTS ON THE COMBINE WHILE IT IS IN MOTION OR WHILE THE ENGINE IS RUNNING.
2. ALLOW ONLY THE OPERATOR ON THE COMBINE. DO NOT PERMIT ANYONE TO RIDE ON THE COMBINE.
3. USE THE HANDRAIL WHEN GETTING ON OR OFF THE COMBINE.
4. BE ESPECIALLY CAREFUL WHEN OPERATING ON HILLSIDES, AS THE COMBINE COULD TIP SIDEWAYS IF IT STRIKES A HOLE, DITCH OR OTHER IRREGULARITY. KEEP THE COMBINE IN GEAR WHEN GOING DOWNHILL.
5. KEEP ALL SHIELDS IN PLACE WHILE THE COMBINE IS IN OPERATION.
6. HAVE A FIRE EXTINGUISHER HANDY. IT IS A GOOD IDEA TO MOUNT ONE ON THE OPERATOR'S PLATFORM.
7. KEEP THE ENGINE AREA CLEAN OF DUST, CHAFF AND STRAW TO PREVENT THE POSSIBILITY OF FIRES.
8. DO NOT WORK UNDER THE HEAD WHEN IT IS IN THE RAISED POSITION UNLESS IT IS PROPERLY BLOCKED OR THE CYLINDER STOP, A, FIGURE 0-1, IS DOWN AND LOCKED.

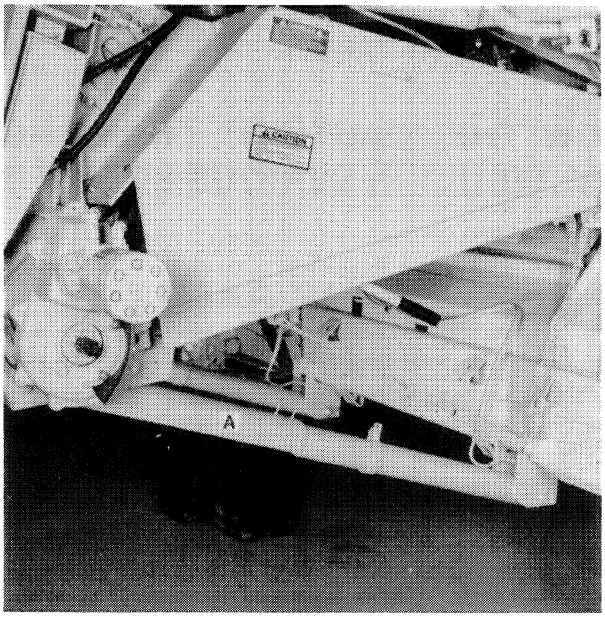

FIGURE 0-1

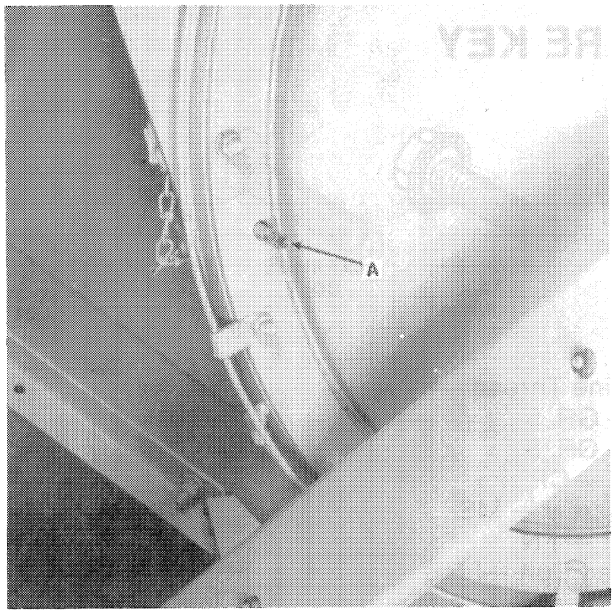

FIGURE 0-2

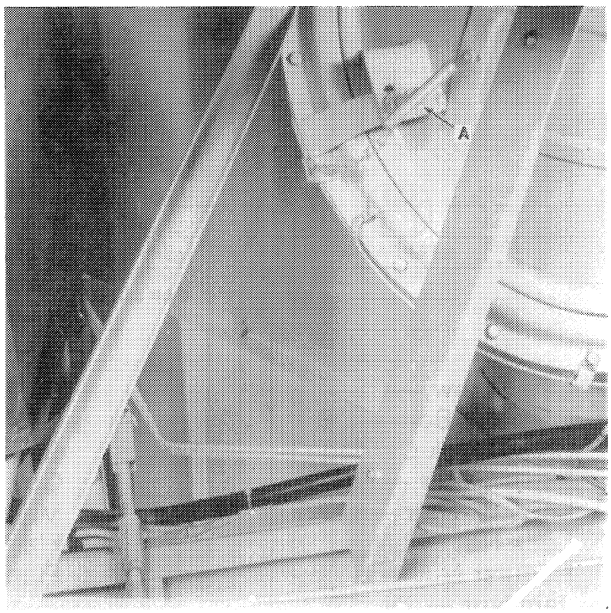

FIGURE 0 -3

9. BE SURE THE PARKING BRAKE IS ENGAGED BEFORE LEAVING THE OPERATOR CONTROL AREA.
10. BE SURE THE HYDROSTATIC SPEED CONTROL LEVER IS IN NEUTRAL BEFORE STARTING THE ENGINE.
11. REPLACE BADLY FRAYED BELTS BEFORE THEY BREAK.
12. WHEN DRIVING THE COMBINE ON A ROAD OR HIGHWAY, USE ACCESSORY LIGHTS OR DEVICES PROVIDED FOR ADEQUATE WARNING TO THE OPERATORS OF OTHER VEHICLES. CHECK YOUR LOCAL GOVERNMENT REGULATIONS CONCERNING THE USE OF WARNING DEVICES.
13. KEEP CHILDREN AWAY FROM AND OFF THE COMBINE AT ALL TIMES.
14. THE COMBINE SHOULD ALWAYS BE EQUIPPED WITH SUFFICIENT REAR AXLE WEIGHT FOR SAFE OPERATION. UNDER SOME FIELD CONDITIONS, MORE WEIGHT MAY BE REQUIRED AT THE REAR AXLE FOR SAFE STABILITY. REFER TO THE GRAIN HEAD AND/OR CORN HEAD MANUAL FOR ADDITIONAL INFORMATION.
15. FOLD THE UNLOADING AUGER BACK AGAINST THE SIDE OF THE COMBINE AFTER UNLOADING THE GRAIN TANK OR WHEN TRANSPORTING THE COMBINE.
16. WHEN THE UNLOADING AUGER IS IN ITS OPERATING POSITION, INSTALL THE CYLINDER STOP, A, FIGURE 0-2, OR A, FIGURE 0-3, BEFORE WORKING ON OR SERVICING THE COMBINE.
17. REFUEL THE COMBINE ONLY WHEN THE ENGINE HAS BEEN SHUT OFF. DO NOT SMOKE OR HAVE ANY OPEN FLAME WHEN REFUELING.

HARDWARE KEY

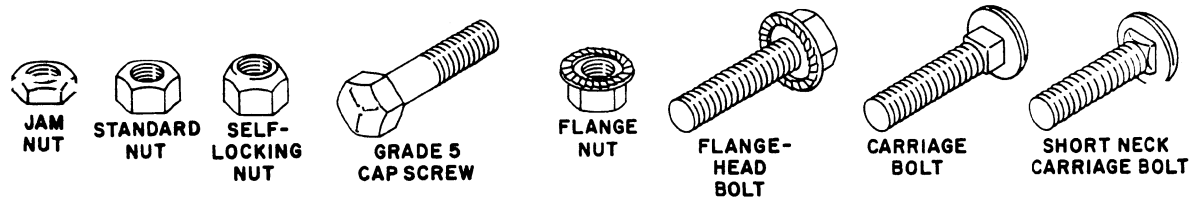

Cap Screw — CS
Carriage Bolt — CB
Short Neck Carriage Bolt — SNCB
Flat Washer — FW
Lock Washer — LW
Lock Nut — LN
Regular Nut — N
Jam Nut — JN

National Fine Thread — N.F.
Grade 5 — GR. 5
Grade 8 — GR. 8
Cotter Pin — CP
Machine Screw — MS
Flange Nut — FN
Flange Head Bolt —FHB

STAINLESS STEEL BOLT
(TORQUE-USE GRADE 5 SPECIFICATIONS)

To CONVERT NEWTON-METERS to FOOT POUNDS, multiply the number of Newton-Meters by 0.737.

Example: 36 Newton-Meters x 0.737 = 26.532 ft. lbs.

To CONVERT FOOT POUNDS to NEWTON-METERS, multiply foot pounds by 1.355.

Example: 27 ft. lbs. x 1.355 = 36.585 Newton-Meters

MINIMUM HARDWARE TIGHTENING TORQUES

IN FOOT POUNDS (NEWTON-METRES) FOR NORMAL ASSEMBLY APPLICATIONS

INCH HARDWARE AND LOCKNUTS

NOMINAL SIZE	SAE GRADE 2		SAE GRADE 5		SAE GRADE 8		LOCKNUTS		NOMINAL SIZE
	UNPLATED or PLATED SILVER	PLATED W/ZnCr GOLD	UNPLATED or PLATED SILVER	PLATED W/ZnCr GOLD	UNPLATED or PLATED SILVER	PLATED W/ZnCr GOLD	GR.B w/GR5 BOLT	GR.C w/GR8 BOLT	
1/4	55*(6.2)	72*(8.1)	86*(9.7)	112* (13)	121* (14)	157* (18)	61*(6.9)	86*(9.8)	1/4
5/16	115* (13)	149* (17)	178* (20)	229* (26)	250* (28)	324* (37)	125* (14)	176* (20)	5/16
3/8	17 (23)	22 (30)	26 (35)	34 (46)	37 (50)	48 (65)	19 (26)	26 (35)	3/8
7/16	27 (37)	35 (47)	42 (57)	54 (73)	59 (80)	77 (104)	30 (41)	42 (57)	7/16
1/2	42 (57)	54 (73)	64 (87)	83 (113)	91 (123)	117 (159)	45 (61)	64 (88)	1/2
9/16	60 (81)	77 (104)	92 (125)	120 (163)	130 (176)	169 (229)	65 (88)	92 (125)	9/16
5/8	83 (112)	107 (145)	128 (174)	165 (224)	180 (244)	233 (316)	90 (122)	127 (172)	5/8
3/4	146 (198)	189 (256)	226 (306)	293 (397)	319 (432)	413 (560)	160 (217)	226 (306)	3/4
7/8	142 (193)	183 (248)	365 (495)	473 (641)	515 (698)	667 (904)	258 (350)	364 (494)	7/8
1	213 (289)	275 (373)	547 (742)	708 (960)	773(1048)	1000(1356)	386 (523)	545 (739)	1

NOTE: Torque values shown with * are inch pounds.

IDENTIFICATION

CAP SCREWS AND CARRIAGE BOLTS

GRADE 2 SAE

GRADE 5 SAE

GRADE 8 SAE

REGULAR NUTS

SAE GRADE 5 HEX NUTS

SAE GRADE 8 HEX NUTS

LOCKNUTS

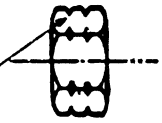

GRADE IDENTIFICATION

GRADE A NO NOTCHES

GRADE B ONE CIRCUMFERENTIAL NOTCH

GRADE C TWO CIRCUMFERENTIAL NOTCHES

GRADE IDENTIFICATION

GRADE A NO MARKS

GRADE B THREE MARKS

GRADE C SIX MARKS

MARKS NEED NOT BE LOCATED AT CORNERS

GRADE IDENTIFICATION

GRADE A NO MARK

GRADE B LETTER B

GRADE C LETTER C

MINIMUM HARDWARE TIGHTENING TORQUES

IN FOOT POUNDS (NEWTON-METRES) FOR NORMAL ASSEMBLY APPLICATIONS

METRIC HARDWARE AND LOCKNUTS

NOMINAL SIZE	CLASS 5.8		CLASS 8.8		CLASS 10.9		LOCKNUT CL.8 w/CL8.8 BOLT
	UNPLATED	PLATED W/ZnCr	UNPLATED	PLATED W/ZnCr	UNPLATED	PLATED W/ZnCr	
M4	15* (1.7)	19*(2.2)	23* (2.6)	30* (3.4)	33* (3.7)	42*(4.8)	16* (1.8)
M6	51* (5.8)	67*(7.6)	79* (8.9)	102* (12)	115* (13)	150* (17)	56* (6.3)
M8	124* (14)	159* (18)	195* (22)	248* (28)	274* (31)	354* (40)	133* (15)
M10	21 (28)	27 (36)	32 (43)	41 (56)	45 (61)	58 (79)	22 (30)
M12	36 (49)	46 (63)	55 (75)	72 (97)	79 (107)	102 (138)	39 (53)
M16	89 (121)	117 (158)	137 (186)	177 (240)	196 (266)	254 (344)	97 (131)
M20	175 (237)	226 (307)	277 (375)	358 (485)	383 (519)	495 (671)	195 (265)
M24	303 (411)	392 (531)	478 (648)	619 (839)	662 (897)	855(1160)	338 (458)

NOTE: Torque values shown with * are in inch pounds.

IDENTIFICATION

HEX CAP SCREWS AND CARRIAGE BOLTS

CLASSES 5.6 AND UP.

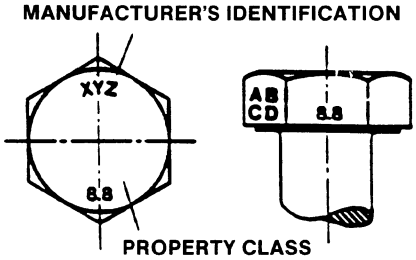

HEX NUTS AND LOCKNUTS

CLASSES 05 AND UP.

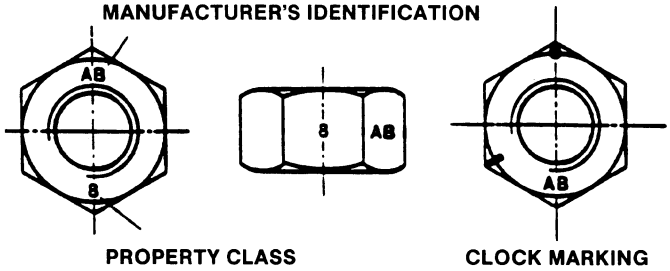

STANDARD TORQUE DATA FOR HYDRAULIC TUBES AND FITTINGS

TUBE NUTS FOR 37° FLARED FITTINGS

SIZE	TUBING O.D. Inches	TUBING O.D. mm	THREAD SIZE	TORQUE FOOT POUNDS Min.	TORQUE FOOT POUNDS Max.	TORQUE NEWTON METERS Min.	TORQUE NEWTON METERS Max.
4	1/4	6.4	7/16-20	9	12	12	16
5	5/16	7.9	1/2-20	12	15	16	20
6	3/8	9.5	9/16-18	21	24	29	33
8	1/2	12.7	3/4-16	35	40	47	54
10	5/8	15.9	7/8-14	53	58	72	79
12	3/4	19.1	1-1/16-12	77	82	104	111
14	7/8	22.2	1-3/16-12	90	100	122	136
16	1	25.4	1-5/16-12	110	120	149	163
20	1-1/2	31.8	1-5/8-12	140	150	190	204
24	1-1/2	38.1	1-7/8-12	160	175	217	237
32	2	50.8	2-1/2-12	225	240	305	325

O-RING BOSS PLUGS, ADJUSTABLE FITTING LOCKNUTS, SWIVEL JIC - 37° SEATS

TORQUE FOOT POUNDS Min.	TORQUE FOOT POUNDS Max.	TORQUE NEWTON METERS Min.	TORQUE NEWTON METERS Max.
6	10	8	14
10	15	14	20
15	20	20	27
25	30	34	41
35	40	47	54
60	70	81	95
70	80	95	109
80	90	108	122
95	115	129	156
120	140	163	190
250	300	339	407

Above torque figures are recommended for plain, cadmium or zinc plated fittings, dry or wet installations.

Swivel nuts either swaged or brazed.

These torques are not recommended for tubes of ½" (12.7 mm) O.D. and larger with wall thickness of 0.035" (0.889 mm) or less. The torque is specified for 0.035" (0.889 mm) wall tubes on each application individually.

CONVERSION CHART

Fractional sub-divisions of an inch to decimals and to millimeters			Conversion Table Millimeters to Inches		Conversion Table Inches to Millimeters	
Inches	Decimals	Millimeters	mm	Inches	Inches	mm
1/64	0.015625	0.3969	0.01	0.00039	0.001	0.0254
1/32	0.03125	0.7937	0.02	0.00079	0.002	0.0508
3/64	0.046875	1.1906	0.03	0.00118	0.003	0.0762
1/16	0.0625	1.5875	0.04	0.00157	0.004	0.1016
5/64	0.078125	1.9844	0.05	0.00197	0.005	0.1270
3/32	0.09375	2.3812	0.06	0.00236	0.006	0.1524
7/64	0.109375	2.7781	0.07	0.00276	0.007	0.1778
1/8	0.125	3.1750	0.08	0.00315	0.008	0.2032
9/64	0.140625	3.5719	0.09	0.00354	0.009	0.2286
5/32	0.15625	3.9687	0.1	0.00394	0.01	0.254
11/64	0.171875	4.3656	0.2	0.00787	0.02	0.508
3/16	0.1875	4.7625	0.3	0.01181	0.03	0.762
13/64	0.203125	5.1594	0.4	0.1575	0.04	1.016
7/32	0.21875	5.5562	0.5	0.01969	0.05	1.270
15/64	0.234375	5.9531	0.6	0.02362	0.06	1.524
1/4	0.25	6.3500	0.7	0.02756	0.07	1.778
17/64	0.265625	6.7469	0.8	0.03150	0.08	2.032
9/32	0.28125	7.1437	0.9	0.03543	0.09	2.286
19/64	0.296875	7.5406	1	0.03937	0.1	2.54
5/16	0.3125	7.9375	2	0.07874	0.2	5.08
21/64	0.328125	8.3344	3	0.11811	0.3	7.62
11/32	0.34375	8.7312	4	0.15748	0.4	10.16
23/64	0.359375	9.1281	5	0.19685	0.5	12.70
3/8	0.375	9.5250	6	0.23622	0.6	15.24
25/64	0.390625	9.9219	7	0.27559	0.7	17.78
13/32	0.40625	10.3187	8	0.31496	0.8	20.32
27/64	0.421875	10.7156	9	0.35433	0.9	22.86
7/16	0.4375	11.1125	10	0.39370	1	25.4
29/64	0.453125	11.5094	11	0.43307	2	50.8
15/32	0.46875	11.9062	12	0.47244	3	76.2
31/64	0.484375	12.3031	13	0.51181	4	101.6
1/2	0.5	12.7000	14	0.55118	5	127.0
33/64	0.515625	13.0969	15	0.59055	6	152.4
17/32	0.53125	13.4937	16	0.62992	7	177.8
35/64	0.546875	13.8906	17	0.66929	8	203.2
9/16	0.5625	14.2875	18	0.70866	9	228.6
37/64	0.578125	14.6844	19	0.74803	10	254.0
19/32	0.59375	15.0812	20	0.78740	11	279.4
39/64	0.609375	15.4781	21	0.82677	12	304.8
5/8	0.625	15.8750	22	0.86614	13	330.2
41/64	0.640625	16.2719	23	0.90551	14	365.6
21/32	0.65625	16.6687	24	0.94488	15	381.0
43/64	0.671875	17.0656	25	0.98425	16	406.6
11/16	0.6875	17.4625	26	1.02362	17	431.8
45/64	0.703125	17.8594	27	1.06299	18	457.2
23/32	0.71875	18.2562	28	1.10236	19	482.6
47/64	0.734375	18.6531	29	1.14173	20	508.0
3/4	0.75	19.0500	30	1.18110	21	533.4
49/64	0.765625	19.4469	31	1.22047	22	558.8
25/32	0.78125	19.8437	32	1.25984	23	594.2
51/64	0.796875	20.2406	33	1.29921	24	609.6
13/16	0.8125	20.6375	34	1.33858	25	635.0
53/64	0.828125	21.0344	35	1.37795	26	660.4
27/32	0.84375	21.4312	36	1.41732	27	685.8
55/64	0.859375	21.8281	37	1.4567	28	711.2
7/8	0.875	22.2250	38	1.4961	29	736.6

Fractional sub-divisions of an inch to decimals and to millimeters			Conversion Table Millimeters to Inches		Conversion Table Inches to Millimeters	
Inches	Decimals	Millimeters	mm	Inches	Inches	mm
57/64	0.890625	22.6219	39	1.5354	30	762.0
29/32	0.90625	23.0187	40	1.5748	31	787.4
59/64	0.921875	23.4156	41	1.6142	32	812.8
15/16	0.9375	23.8125	42	1.6535	33	838.2
61/64	0.953125	24.2094	43	1.6929	34	863.6
31/32	0.96875	24.6062	44	1.7323	35	889.0
63/64	0.984375	25.0031	45	1.7717	36	914.4
			46	1.8110	37	939.8
			47	1.8504	38	965.2
			48	1.8898	39	990.6
			49	1.9291	40	1016.0
			50	1.9685	41	1041.4
			51	2.0079	42	1066.8
			52	2.0472	43	1092.2
			53	2.0866	44	1117.6
			54	2.1260	45	1143.0
			55	2.1654	46	1168.4
			56	2.2047	47	1193.8
			57	2.2441	48	1219.2
			58	2.2835	49	1244.6
			59	2.3228	50	1270.0
			60	2.3622	51	1295.4
			61	2.4016	52	1320.8
			62	2.4409	53	1346.2
			63	2.4803	54	1371.6
			64	2.5197	55	1397.0
			65	2.5590	56	1422.4
			66	2.5984	57	1447.8
			67	2.6378	58	1473.2
			68	2.6772	59	1498.6
			69	2.7165	60	1524.0
			70	2.7559	61	1549.4
			71	2.7953	62	1574.8
			72	2.8346	63	1600.2
			73	2.8740	64	1625.6
			74	2.9134	65	1651.0
			75	2.9528	66	1676.4
			76	2.9921	67	1701.8
			77	3.0315	68	1727.2
			78	3.0709	69	1752.6
			79	3.1102	70	1778.0
			80	3.1496	71	1803.4
			81	3.1890	72	1828.8
			82	3.2283	73	1854.2
			83	3.2677	74	1879.6
			84	2.3071	75	1905.0
			85	3.3455	76	1930.4
			86	3.3858	77	1955.8
			87	3.4252	78	1981.2
			88	3.4646	79	2006.6
			89	3.5039	80	2032.0
			90	3.5433	81	2057.4

Inches	Fractional sub-divisions of an inch to decimals and to millimeters: Decimals	Millimeters	Conversion Table Millimeters to Inches: mm	Inches	Conversion Table Inches to Millimeters: Inches	mm
			91	3.5868	82	2082.8
			92	3.6220	83	2108.2
			93	3.6614	84	2133.6
			94	3.7008	85	2159.0
			95	3.7402	86	2184.4
			96	3.7795	87	2209.8
			97	3.8189	88	2235.2
			98	3.8483	89	2260.6
			99	3.8976	90	2286.0
			100	3.937008	91	2311.4
					92	2336.8
					94	2387.6
					95	2413.0
					96	2438.4
					97	2463.8
					98	2489.2
					99	2514.6
					100	2540.0

1 mm = 0.03937008 inches

1 inch = 25.4 millimeters

To CONVERT MILLIMETERS to INCHES, multiply the number of millimeters by 0.03937.

Example: 75.384 mm x 0.03937 = 2.9678″

To CONVERN INCHES to MILLIMETERS, multiply the number of inches by 25.4.

Example: 2.9678″ x 25.4 = 75.384 mm

SECTION 1

ELECTRICAL SYSTEM

CONTENTS

TR96 and TR97

GENERAL ELECTRICAL 1A-1

AIR CONDITIONING ELECTRICAL SYSTEM 1B-1

LIGHT ELECTRICAL SYSTEMS 1C-1

VARIABLE SPEED CONTROL ELECTRICAL SYSTEM 1D-1

ENGINE ELECTRICAL SYSTEM 1E-1

ELECTRONIC STONE TRAP ELECTRICAL SYSTEM 1F-1

ELECTROHYDRAULIC ELECTRICAL SYSTEM 1G-1

WIRING DIAGRAMS 1H-1

INDEX 1I-1

SECTION 1A
ELECTRICAL SYSTEM
GENERAL ELECTRICAL

INTRODUCTION

The electrical system has been divided into the following sections:

1A GENERAL ELECTRICAL

1B AIR-CONDITIONING ELECTRICAL SYSTEM

1C LIGHT ELECTRICAL SYSTEMS

1D VARIABLE SPEED CONTROL ELECTRICAL SYSTEMS

1E ENGINE ELECTRICAL SYSTEMS

1F ELECTRONIC STONE TRAP ELECTRICAL SYSTEM

1G ELECTRO-HYDRAULIC ELECTRICAL SYSTEMS

1H WIRING DIAGRAMS

Each section has a description of the electrical circuit, a schematic of the circuit, and diagnostic test procedures based on the symptom(s) that a system demonstrates.

Read all the introductory information before starting any test procedure. Next, look through the test procedures and locate the correct symptom. Use that test procedure to locate and correct the problem. Follow the steps as instructed. Do not skip steps unless instructed to do so in the test procedures.

Prepare the machine for the test by following the pretest instructions. Perform the test and observe the results. Perform the indicated corrective action. Continue through the test procedure until the problem is corrected, then return the system to an operational condition (replace shields, etc.).

DEFINITION OF TERMS

ALTERNATING CURRENT (A.C.) -- A flow of electrons which reverses its direction of flow at regular intervals in a conductor.

AMMETER -- Measures the flow of electrical current in amperes. Ammeters are connected in series with the circuit to be tested.

AMPERE -- A unit of measure for the flow of current in a circuit. The ampere is used to measure electricity such as "gallons per minute" is used to measure liquid flow.

CIRCUIT -- A continuous, unbroken path along a conductor through which electrical current can flow from a source, through various units, and back to the source.

CIRCUIT BREAKER -- A device to protect an electrical circuit from overloads.

COLD RATING -- The cranking load capacity of a battery at low temperatures.

CONTINUITY -- Unbroken path along a conductor through which electrical current can flow.

CURRENT -- Movement of electricity along a conductor. Current is measured in amperes.

DIODE -- An electrical device that will allow current to pass through itself in one direction only.

DIRECT CURRENT (D.C.) -- A flow of electrons moving in the same direction along a conductor from a point of high potential to one of lower potential.

OHM -- The standard unit for measuring resistance to flow of an electrical current.

OHMMETER -- An instrument for measuring the resistance in ohms of an electrical circuit.

OPEN CIRCUIT -- An open circuit occurs when a circuit is broken interrupting the flow of current through the circuit.

RELAY -- An electrical switch which opens and closes a circuit automatically when activated.

RESISTANCE -- The opposing force offered by a circuit. Resistance is measured in ohms.

SHORT CIRCUIT -- A part of a circuit comes in contact with part of the same circuit or unintentionally touches a metallic object.

SOLENOID -- A circular coil used for producing a magnetic field.

VOLT -- A unit of electrical pressure which caused current to flow in a circuit.

VOLTAGE -- The force which is generated to cause current to flow in an electrical circuit. Voltage is measured in volts.

VOLTMETER -- An instrument for measuring the force in volts of electrical current. Voltmeters are connected in parallel to the points where voltage is to be measured.

ELECTRICAL SYSTEM COMPONENTS

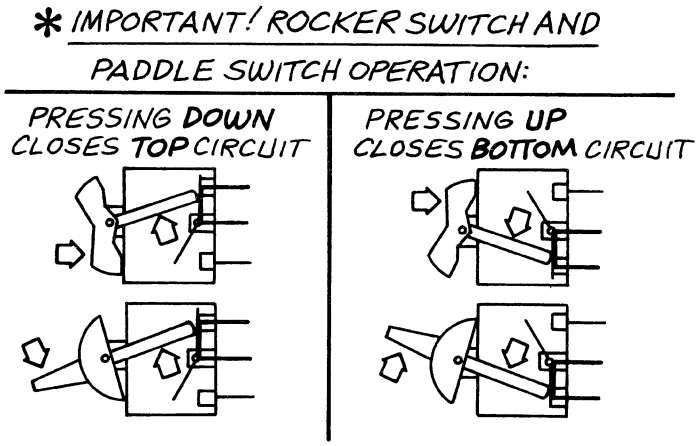

FIGURE 1A-1

MOMENTARY SWITCHES

Figure 1A-1

Momentary switches are used to direct power to circuits. These switches will return to the neutral position when released. Power flow through the switch is shown in the schematic.

CIRCUIT BREAKERS

Circuit breakers are used to protect wires and electrical parts from overload caused by short circuits or circuit overload.

FUSES

Fuses protect electrical parts from overload. Use the correct size fuse, as specified, for the circuits. Use of higher rated or slow-blow fuses could cause damage to components.

DIODES

Diodes permit electrical current to flow in one direction but not the other. Diodes are used in the electro-hydraulic system so that one wire can be used with more than one circuit to control a relay or solenoid. Diodes also prevent arcing at the contact points of the relays and momentary switches.

Two size diodes are used in the electrical system. One amp diodes are used to operate relays and six amp diodes are used to operate solenoids.

A six amp diode may be substituted for a one amp diode, but a one amp should not be used in place of a six amp diode.

One amp diodes are smaller in size than six amp diodes as shown in Figure 1A-2. One amp diodes also have two parallel lines on each side of the diodes while six amp diodes have plain sides.

Diodes can fail in either an open condition, in which no power passes in either direction, or a closed condition in which power flows in both directions. Failures usually occur due to overload or by short circuits. DO NOT SHORT WIRES TO GROUND TO DETERMINE IF POWER IS AVAILABLE (SPARK TEST). THIS WILL CAUSE DIODES TO FAIL.

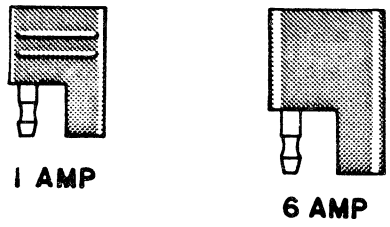

FIGURE 1A-2

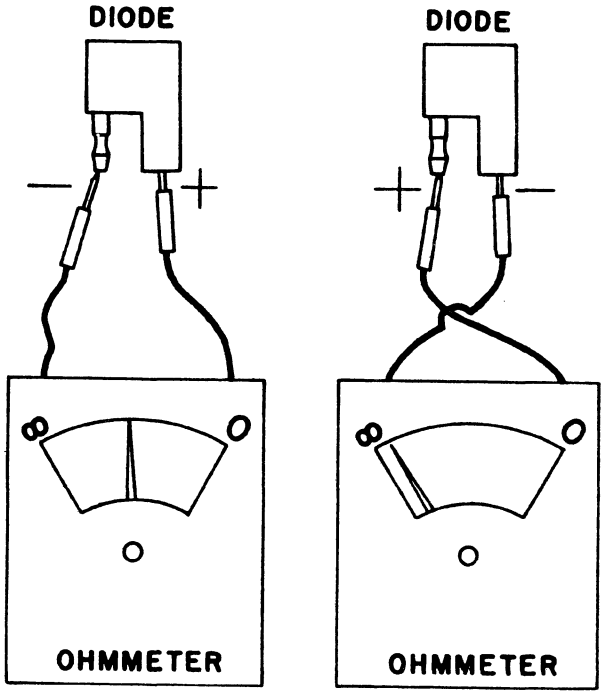

FIGURE 1A-3

DIODE TEST PROCEDURE

Figure 1A-3

To test a diode, use an ohmmeter set to the R X 1 or to the R X 10 scale. Remove the diode and connect the ohmmeter test leads to the ends of the diode. Measure the resistance, then reverse the test leads. In one direction the ohmmeter should show an open circuit (no needle deflection). When the test leads are reversed the ohmmeter should show about half scale deflection. If the two readings are the same, the diode is defective and should be replaced. A known good diode or one from a working circuit can be substituted for a suspected defective diode if an ohmmeter is not available.

DIODE CHART

The chart shows which functions will be affected by a diode that fails open or closed.

The symptoms that the operator will observe are listed first (1). The electrical symptoms that will be observed at the coils of the stack valve(s) are listed second (2).

A circuit may indicate a model and/or serial number range for which it applies. If a circuit does not indicate a model or serial number range, the circuit description applies to all Models TR96 and TR97 combines.

CIRCUIT (applicable model)	DIODE	SYMPTOMS IF DIODE FAILS OPEN	SYMPTOMS IF DIODE FAILS CLOSED
Reel raise/ lower (TR96 below S/N 529779)	D1	(1) Reel will not raise when the reel raise circuit is activated. (2) Power to the master solenoid, no power to reel solenoid when the reel raise circuit is activated.	(1) Reel will raise when the reel lower button is depressed. (2) Power to the master and reel solenoids when the reel lower circuit is activated.
(TR96 above S/N 529778 and TR97)	D1	NOT USED	
Reel raise (TR96 below S/N 529779)	D2	(1) Reel will lower when the reel raise circuit is activated. (2) Power to reel solenoid, no power at master solenoid when the reel raise circuit is activated.	(1) Reel will raise when head is raised or head tilt circuits are activated. (2) Power to reel solenoid when listed systems are activated.
Reel raise (TR96 above S/N 529778 and TR97)	D2	(1) Reel will not raise when the reel raise circuit is activated. (2) Power to reel raise solenoid, no power at master solenoid when the reel raise circuit is activated.	(1) Reel will raise when head is raised or head tilt circuits are activated. (2) Power to reel raise solenoid when listed systems are activated.

CIRCUIT (applicable model)	DIODE	SYMPTOMS IF DIODE FAILS OPEN	SYMPTOMS IF DIODE FAILS CLOSED
Head raise and automatic head height	D3	(1) The head will not raise, and the head raise light does not light, when the manual head raise switch is activated. The head will raise and the head raise light will light when the automatic head height raise switch is activated on the head. (2) No power to the head raise or master solenoids when the manual head raise switch is activated.	(1) The head will not raise, and the head height power on light goes out when the automatic head height control raise switch is activated on the head. The head raises normally when the manual head raise switch is activated. (2) Power at the P/O wire connection at the head height latch off relay base when the relay is removed and the automatic head height control raise switch on the head is activated.
Head raise	D4	(1) Head will not raise, but the head raise indicator light lights when the head raise circuit is activated. (2) Power to the head raise solenoid, no power to the master solenoid when the head raise circuit is activated.	(1) Head will raise when the head raise, reel raise, or head tilt circuits are activated. (2) Power at the head raise solenoid when the listed functions are activated.
Head lower	D5	(1) System works properly until the automatic head height system is activated. Then, the automatic head height control system will not work and the automatic head height control system on light will not light. (2) There is power to the head lower solenoid but no power to the automatic head height and head tilt switches when the head lower switch is depressed.	(1) System works properly until the automatic head height control is activated. Then, the head will continually lower and the head lower light will stay on. When the automatic head raise switch is activated, the head will raise very slowly. Both the head raise and head lower lights will light. (2) There is continual power to the head lower solenoid when the automatic head height system is activated with connector K disconnected.

CIRCUIT (applicable model)	DIODE	SYMPTOMS IF DIODE FAILS OPEN	SYMPTOMS IF DIODE FAILS CLOSED
Head tilt clockwise	D6	(1) Head will not tilt clockwise but the clockwise indicator light will light. (2) Power to clockwise tilt solenoid, but no power to the master solenoid when the clockwise tilt system is activated.	(1) Head tilts clockwise when reel lift and head lift circuits are activated. Head will not tilt when counterclockwise tilt circuit is activated. The clockwise tilt indicator light will light when any of the listed functions are activated. (2) Power to clockwise head tilt solenoid when listed functions are activated.
Head tilt counterclockwise	D7	(1) Head will not tilt counterclockwise but the counterclockwise indicator light will light. (2) Power at counterclockwise tilt solenoid, no power at master solenoid when the counterclockwise tilt system is activated.	(1) Head will tilt counterclockwise when reel lift or head lift circuits are activated. Head will not tilt when clockwise tilt circuit is activated. The counterclockwise tilt indicator light will light when any of the listed functions are activated. (2) Power to counterclockwise head tilt solenoid when listed functions are activated.
	D8	NOT USED	
	D9	NOT USED	
Unloading auger swing out	D10	(1) Unloading auger will not swing out. (2) Power at the swing out solenoid, no power at the master solenoid when the system is activated.	(1) Unloading auger will swing out when the reel raise, head raise, head tilt CW or CCW, feeder reverser, or reel fore-aft systems are activated. The auger will not move when the swing in system is activated. (2) Power to the swing out solenoid when any of the listed functions are activated.

CIRCUIT (applicable model)	DIODE	SYMPTOMS IF DIODE FAILS OPEN	SYMPTOMS IF DIODE FAILS CLOSED
Unloading auger swing in	D11	(1) Unloading auger will not swing in. (2) Power at the swing in solenoid, no power at the master solenoid when the system is activated.	(1) Unloading auger will swing in when the reel raise, head raise, head tilt CW or CCW, feeder reverser, or reel fore-aft systems are activated. The auger will not move when the swing out system is activated. (2) Power to the swing in solenoid when any of the listed functions are activated.
Feeder reverser reverse direction	D12	(1) Reverser will not work in the reverse direction. (2) Power at the reverse solenoid, no power at the master solenoid when the system is activated.	(1) Reverser will operate in the reverse direction when the reel raise, head raise, head tilt CW or CCW, unloading auger swing in or out, or reel fore-aft systems are activated. The reverser will not move when the forward direction system is activated. (2) Power to the reverse solenoid when any of the listed functions are activated.
Feeder reverser forward direction	D13	(1) Reverser will not work in the forward direction. (2) Power at the forward solenoid, no power at the master solenoid when the system is activated.	(1) Reverser will operate in the forward direction when the reel raise, head raise, head tilt CW or CCW, unloading auger swing in or out, or reel fore-aft systems are activated. The reverser will not move when the reverse direction system is activated. (2) Power to the forward solenoid when any of the listed functions are activated.

CIRCUIT (applicable model)	DIODE	SYMPTOMS IF DIODE FAILS OPEN	SYMPTOMS IF DIODE FAILS CLOSED
Automatic head tilt counterclockwise lower switch (located on the head)	D14	(1) Head will not tilt CCW when the automatic CCW lower switch is activated. CCW indicator light does not light. (2) No power at the CCW tilt solenoid or the master solenoid when the automatic CCW lower switch is activated.	(1) Head will not tilt CCW when the automatic CCW raise switch is activated. Both CW and CCW indicator lights light. (2) Power to CW and CCW head tilt solenoids and the master solenoid when the automatic CCW raise switch is activated.
Automatic head tilt clockwise raise switch (located on the head)	D15	(1) Head will not tilt CW when the automatic CW raise switch is activated. CW indicator light does not light. (2) No power at the CW tilt solenoid or the master solenoid when the automatic CW raise switch is activated.	(1) Head will not tilt CW when the automatic CW lower switch is activated. Both CW and CCW indicator lights light. (2) Power to CW and CCW head tilt solenoids and the master solenoid when the automatic CW lower switch is activated.
Automatic head tilt counterclockwise raise switch (located on the head)	D16	(1) Head will not tilt CCW when the automatic CCW raise switch is activated. CCW indicator light does not light. (2) No power at the CCW tilt solenoid or the master solenoid when the automatic CCW raise switch is activated.	(1) Head will not tilt CCW when the automatic CCW lower switch is activated. Both CW and CCW indicator lights light. (2) Power to CW and CCW head tilt solenoids and the master solenoid when the automatic CCW lower switch is activated.
Automatic head tilt clockwise lower switch (located on the head)	D17	(1) Head will not tilt CW when the automatic CW lower switch is activated. CW indicator light does not light. (2) No power at the CW tilt solenoid or the master solenoid when the automatic CW lower switch is activated.	(1) Head will not tilt CW when the automatic CW raise switch is activated. Both CW and CCW indicator lights light. (2) Power to CW and CCW head tilt solenoids and the master solenoid when the automatic CW lower switch is activated.

CIRCUIT (applicable model)	DIODE	SYMPTOMS IF DIODE FAILS OPEN	SYMPTOMS IF DIODE FAILS CLOSED
Rotor speed decrease (TR96, TR97 below S/N 557404)	D18	(1) Rotor speed will not decrease when the rotor speed decrease circuit is activated. (2) Power to rotor speed decrease solenoid on the stack valve but no power to the solenoid on the rotor speed isolation valve when the rotor speed decrease switch is activated.	(1) Rotor speed will not increase or increases very slowly. (2) Power to the master solenoid, rotor speed increase solenoid, rotor speed decrease solenoid on the stack valve and power to the solenoid on the rotor speed isolation valve when the rotor speed increase switch is activated.
(TR97 above S/N 557403)	D18	NOT USED	
Rotor speed increase (TR96, TR97 below S/N 557404)	D19	(1) Rotor speed will not increase when the rotor speed increase circuit is activated. (2) Power to master solenoid and rotor speed increase solenoid on the stack valve but no power to the solenoid on the rotor speed isolation valve when the rotor speed increase switch is activated.	(1) Rotor speed will not increase or increases very slowly. (2) Power to the master solenoid, rotor speed increase solenoid, rotor speed decrease solenoid on the stack valve and power to the solenoid on the rotor speed isolation valve when the rotor decrease switch is activated.
(TR97 above S/N 557403)	D19	NOT USED	
Reel forward (TR97 above S/N 557403)	D20	(1) Reel will not move forward when the reel fore circuit is activated. (2) Power at the reel fore solenoid, no power at the master solenoid when then reel fore circuit is activated.	(1) Reel will move forward when the reel raise, head raise, head tilt CW/CCW, feeder reverser, or unloading auger swing in/out systems are activated. (2) Power to the reel forward solenoid when any of the listed functions are activated.
Reel aft (TR97 above S/N 557403)	D21	(1) Reel will not move aft when the reel aft circuit is activated. (2) Power at the reel aft solenoid, no power at the master solenoid when then reel fore circuit is activated.	(1) Reel will move aft when the reel raise, head raise, head tilt CW/CCW, feeder reverser, or unloading auger swing in/out systems are activated. (2) Power to the reel aft solenoid when any of the listed functions are activated.

SOLENOID COILS

Introduction

Three different styles of coils are used to activate the various solenoids used on the combine.

One style coil is used on the electro-hydraulic stack valve solenoids. This style coil is an intermittent duty coil and is energized only when a stack valve function is activated. This coil has an internal spark suppression diode to prolong the life of the momentary switches. These coils are identified by a dot of red and yellow paint.

All the coils used on the stack valve are the same and can be interchanged.

A second style coil is used on the reel speed control valve. This coil is a continual duty coil and is energized when the reel speed is activated.

A third style coil is used on the powered rear axle control valve. This is a continual duty coil and is energized when the powered rear axle is engaged.

Operation

Power enters the coil through the stud and passes through the coil windings and grounds through the metal ring at the end of the coil. When the coil is energized, an electro-magnetic field is created around the solenoid. The electro-magnetic field causes the armature inside the solenoid to move. The armature moves a poppet which controls oil flow through the electro-hydraulic valve.

COIL TEST PROCEDURE

To test a coil, remove the wire(s) from the coil and attach an ohmmeter as shown in Figure 1A-4. The coil should have the following ohms resistance:

Coil Location	Spark Suppression Diode Test Required	Resistance	Identification
*Stack Valve Coils	yes	3 to 4 ohms	red/yellow paint
Powered Rear Axle Coil	no	7 to 8.5 ohms	none
Reel Speed Coil	no	8 to 10 ohms	none

***NOTE: The spark suppression diode test must be performed in addition to the standard coil test.**

NOTE: The stack valve and powered rear axle coils must be tightly secured to the solenoid body because the coil grounds through the solenoid. All rust and dirt should be removed between the coil and solenoid.

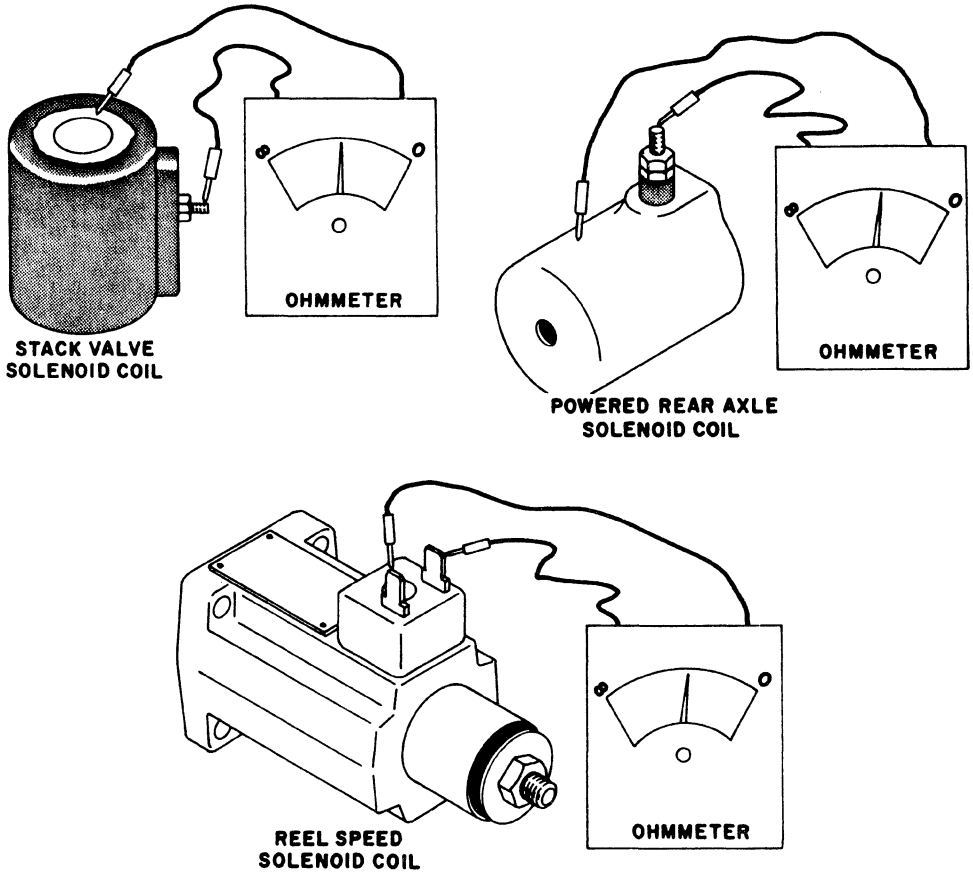

FIGURE 1A-4

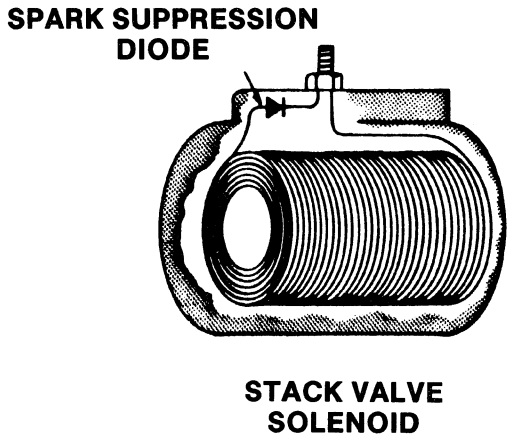

FIGURE 1A-5

SOLENOID OPERATION

An easy way to check if a solenoid is being energized is to place an iron object at the solenoid cover and activate the solenoid by pressing the appropriate switch. If the solenoid receives power, the solenoid will become magnetic and attract the iron object.

If the proper solenoid(s) are being energized when a circuit is activated, the problem is in the solenoid or hydraulic valve.

COIL SPARK SUPPRESSION DIODE TEST

The coils used on the stack valve have a spark suppression diode, Figure 1A-5, built into the coil. The diode prolongs the life of the electro-hydraulic activation switches and assures proper operation of the automatic head height system.

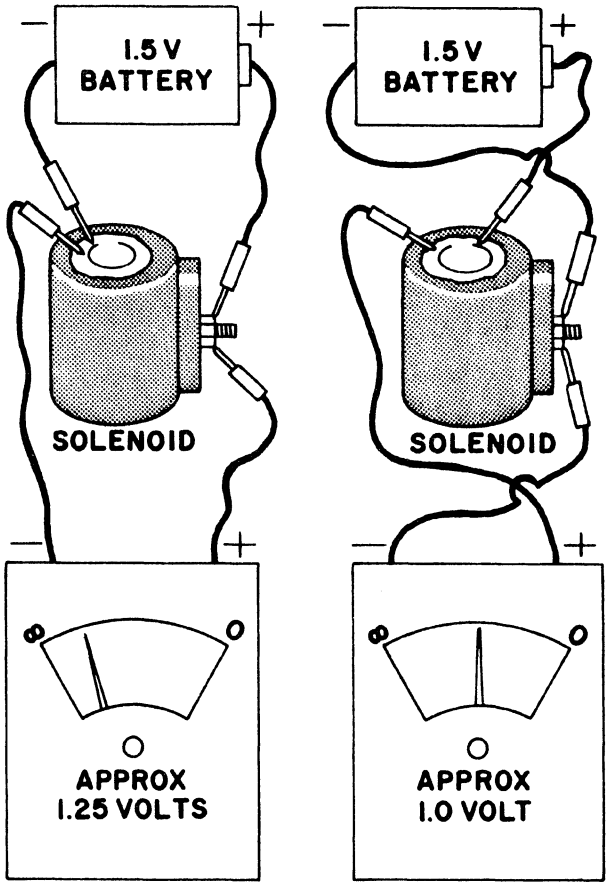

ACTUAL VOLTAGE IS NOT IMPORTANT BUT THERE MUST BE A DIFFERENCE IN VOLTAGE.

CHECKING ARC SUPPRESSION DIODE

FIGURE 1A-6

To test the arc suppression diode, attach a 1½ volt battery and a voltmeter to the coil as shown in Figure 1A-6. The voltmeter should read approximately 1.25 volts when the voltmeter positive lead is attached to the stud.

Reverse the battery and voltmeter leads as shown. The voltmeter should read approximately 1 volt when the negative terminal of the voltmeter is attached to the coil stud.

The actual voltage readings are not important as long as they are different. The difference indicates that the diode is conducting current in only one direction. If the voltages are the same, the suppression diode is defective and the coil must be replaced.

NOTE: Do not use more than a 1½ volt battery for testing purposes or the diode may be damaged.

Product: New Holland TR 96/TR 97/TR 98 Combine Service Repair Manual
Full Download: https://www.arepairmanual.com/downloads/new-holland-tr-96-tr-97-tr-98-combine-service-repair-manual/

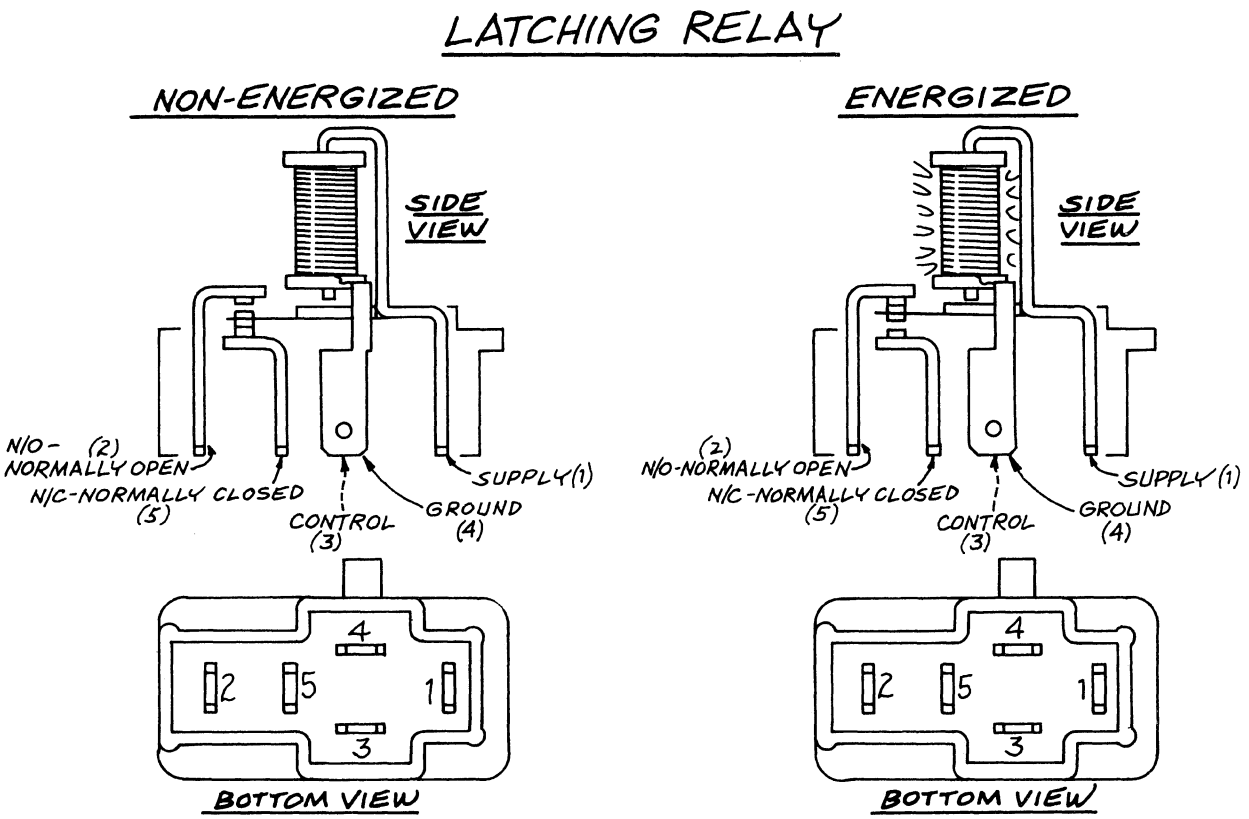

FIGURE 1A-7

RELAYS

Figure 1A-7

Relays are used to control the flow of power to various electrical circuits. A relay can control two different circuits by directing power to one circuit when the relay is not energized. When the relay is energized, power to the first circuit will be discontinued and power will be directed to a second circuit.

The relay controls power flow by activating or not activating the five external terminals on the relay base. Terminal #1 is the common input for electrical current to either terminal #2 or terminal #5. Terminals #3 and #4 are connected to a coil in the relay. The coil determines whether current flows from terminal #1 to #2 or from #1 to #5. When there is no current flow to the coil, the circuit between terminal #1 and #5 is complete. These are the "normally closed" contacts.

When current is available at terminal #3, power goes through the coil to ground at the #4 terminal, and the coil is energized. The energized coil pulls the latch up opening the #1 and #5 circuit while the circuit between terminals #1 and #2 is completed. The #1 to #2 circuit is the "normally open" circuit. Current will only flow between terminals #1 and #2 or terminals #1 and #5, but never through both at the same time.

To remove a relay, pull the locking tab on the relay base away from the relay and remove the relay.

Before installing the relay in the relay base, check the terminals on the relay to be sure they are not bent. A bent terminal may not make contact with the relay base and the circuit will not work.

Sample of manual. Download All 1866 pages at:
https://www.arepairmanual.com/downloads/new-holland-tr-96-tr-97-tr-98-combine-service-repair-manual/