Product: 2006 Harley Davidson Touring Motocycle Service Repair Workshop Manual
Full Download: https://www.arepairmanual.com/downloads/2006-harley-davidson
-touring-motocycle-service-repair-workshop-manual/

MAINTENANCE 1

Table Of Contents

SUBJECT **PAGE NO.**

1.1 General 1-1
1.2 Maintenance Schedule 1-6
1.3 Engine Oil/Filter 1-9
1.4 Air Cleaner 1-11
1.5 Tires 1-13
1.6 Wheel Spokes 1-14
1.7 Primary Chain/Lubricant 1-15
1.8 Clutch Adjustment 1-17
1.9 Transmission Lubricant 1-19
1.10 Drive Belt 1-20
1.11 Throttle Cables 1-23
1.12 Enrichener Control 1-26
1.13 Fuel System 1-27
1.14 Brakes 1-29
1.15 Spark Plugs 1-30
1.16 Engine Idle Speed 1-31
1.17 Front Fork Oil 1-32
1.18 Steering Head Bearings 1-33
1.19 Critical Fasteners 1-34
1.20 Battery 1-36
1.21 Troubleshooting 1-37

Sample of manual. Download All 986 pages at:
https://www.arepairmanual.com/downloads/2006-harley-davidson-touring-motocycle-service-repair-workshop-manual/

Product: 2006 Harley Davidson Touring Motocycle Service Repair Workshop Manual
Full Download: https://www.arepairmanual.com/downloads/2006-harley-davidson
-touring-motocycle-service-repair-workshop-manual/

Sample of manual. Download All 986 pages at:
https://www.arepairmanual.com/downloads/2006-harley-davidson-touring-motocycle-service-repair-workshop-manual/

GENERAL 1.1

REPAIR NOTES

General maintenance practices are given in this section. All special tools and torque values are noted at the point of use and all required parts or materials can be found in the appropriate PARTS CATALOG.

Safety

Safety is always the most important consideration when performing any job. Be sure you have a complete understanding of the task to be performed. Use common sense. Use the proper tools. Don't just do the job – do the job safely.

Removing Parts

Always consider the weight of a part when lifting. Use a hoist whenever necessary. Do not lift heavy parts by hand. A hoist and adjustable lifting beam or sling are needed to remove some parts. The lengths of chains or cables from the hoist to the part should be equal and parallel, and should be positioned directly over the center of the part. Be sure that no obstructions will interfere with the lifting operation. Never leave a part suspended in mid-air.

Always use blocking or proper stands to support the part that has been hoisted. If a part cannot be removed, verify that all bolts and attaching hardware have been removed. Check to see if any parts are in the way of the part being removed.

When removing hoses, wiring or tubes, always tag each part to ensure proper installation.

Cleaning

If you intend to reuse parts, follow good shop practice and thoroughly clean the parts before assembly. Keep all dirt out of parts; the unit will perform better and last longer. Seals, filters and covers are used in this motorcycle to keep out environmental dirt and dust. These items must be kept in good condition to ensure satisfactory operation.

Clean and inspect all parts as they are removed. Be sure all holes and passages are clean and open. After cleaning, cover all parts with clean lint-free cloth, paper or other material. Be sure the part is clean when it is installed.

Always clean around lines or covers before they are removed. Plug, tape or cap holes and openings to keep out dirt, dust and debris.

Always verify cleanliness of blind holes before assembly. Tightening screws with dirt, water or oil in the holes can cause castings to crack or break.

Disassembly and Assembly

Always assemble or disassemble one part at a time. Do not work on two assemblies simultaneously. Be sure to make all necessary adjustments. Recheck your work when finished. Be sure that everything is done.

Operate the motorcycle to perform any final check or adjustments. If all is correct, the motorcycle is ready to go back to the customer.

Checking Torques on Fasteners with Lock Patches

To check the torque on a fastener that has a lock patch:

1. Set the torque wrench for the lowest setting in the specified torque range.
2. Attempt to tighten fastener to set torque. If fastener does not move and lowest setting is satisfied (torque wrench clicks), then the proper torque has been maintained.

REPAIR AND REPLACEMENT PROCEDURES

Hardware and Threaded Parts

Install helical thread inserts when inside threads in castings are stripped, damaged or not capable of withstanding specified torque.

Replace bolts, nuts, studs, washers, spacers and small common hardware if missing or in any way damaged. Clean up or repair minor thread damage with a suitable tap or die.

Replace all damaged or missing lubrication fittings.

Use Teflon tape on pipe fitting threads.

Wiring, Hoses and Lines

Replace hoses, clamps, electrical wiring, electrical switches or fuel lines if they do not meet specifications.

Instruments and Gauges

Replace broken or defective instruments and gauges. Replace dials and glass that are so scratched or discolored that reading is difficult.

Bearings

Anti-friction bearings must be handled in a special way. To keep out dirt and abrasives, cover the bearings as soon as they are removed from the package.

Wash bearings in a non-flammable cleaning solution. Knock out packed lubricant inside by tapping the bearing against a wooden block. Wash bearings again. Cover bearings with clean material after setting them down to dry. Never use compressed air to dry bearings.

Coat bearings with clean oil. Wrap bearings in clean paper.

Be sure that the chamfered side of the bearing always faces the shoulder (when bearings installed against shoulders). Lubricate bearings and all metal contact surfaces before pressing into place. Only apply pressure on the part of the bearing that makes direct contact with the mating part.

Always use the proper tools and fixtures for removing and installing bearings.

Bearings do not usually need to be removed. Only remove bearings if necessary.

Bushings

Do not remove a bushing unless damaged, excessively worn or loose in its bore. Press out bushings that must be replaced.

When pressing or driving bushings, be sure to apply pressure in line with the bushing bore. Use a bearing/bushing driver or a bar with a smooth, flat end. Never use a hammer to drive bushings.

Inspect the bushing and the mated part for oil holes. Be sure all oil holes are properly aligned.

Gaskets

Always discard gaskets after removal. Replace with new gaskets. Never use the same gasket twice (unless instructed otherwise). Be sure that gasket holes match up with holes in the mating part.

If a gasket must be made, be sure to cut holes that match up with the mating part. Serious damage can occur if any flange holes are blocked by the gasket. Use material that is the right type and thickness.

Lip Type Seals

Lip seals are used to seal oil or grease and are usually installed with the sealing lip facing the contained lubricant. Seal orientation, however, may vary under different applications.

Seals should not be removed unless necessary. Only remove seals if required to gain access to other parts or if seal damage or wear dictates replacement.

Leaking oil or grease usually means that a seal is damaged. Replace leaking seals to prevent overheated bearings.

Always discard seals after removal. Do not use the same seal twice.

O-Rings (Preformed Packings)

Always discard O-rings after removal. Replace with new O-rings. To prevent leaks, lubricate the O-rings before installation. Apply the same type of lubricant as that being sealed. Be sure that all gasket, O-ring and seal mating surfaces are thoroughly clean before installation.

Gears

Always check gears for damaged or worn teeth.

Remove burrs and rough spots with a honing stone or crocus cloth before installation. Lubricate mating surfaces before pressing gears on shafts.

Shafts

If a shaft does not come out easily, check that all nuts, bolts or retaining rings have been removed. Check to see if other parts are in the way before using force.

Shafts fitted to tapered splines should be very tight. If shafts are not tight, disassemble and inspect tapered splines. Discard parts that are worn. Be sure tapered splines are clean, dry and free of burrs before putting them in place. Press mating parts together tightly.

Clean all rust from the machined surfaces of new parts.

Part Replacement

Always replace worn or damaged parts with new parts.

CLEANING

Part Protection

Before cleaning, protect rubber parts (such as hoses, boots and electrical insulation) from cleaning solutions. Use a grease-proof barrier material. Remove the rubber part if it cannot be properly protected.

Cleaning Process

Any cleaning method may be used as long as it does not result in parts damage. Thorough cleaning is necessary for proper parts inspection. Strip rusted paint areas to bare metal before repainting.

Rust or Corrosion Removal

Remove rust and corrosion with a wire brush, abrasive cloth, sand blasting, vapor blasting or rust remover. Use buffing crocus cloth on highly polished parts that are rusted.

Bearings

Remove shields and seals from bearings before cleaning. Clean bearings with permanent shields and seals in solution.

Clean open bearings by soaking them in a petroleum cleaning solution. Never use a solution that contains chlorine.

Let bearings stand and dry. Do not dry using compressed air. Do not spin bearings while they are drying.

TOOL SAFETY

AIR TOOLS

- Always use approved eye protection equipment when performing any task using air-operated tools.
- On all power tools, use only recommended accessories with proper capacity ratings.
- Do not exceed air pressure ratings of any power tools.
- Bits should be placed against work surface before air hammers are operated.
- Disconnect the air supply line to an air hammer before attaching a bit.
- Never point an air tool at yourself or another person.
- Protect bystanders with approved eye protection.

WRENCHES

- Never use an extension on a wrench handle.
- If possible, always pull on a wrench handle and adjust your stance to prevent a fall if something lets go.
- Never cock a wrench.
- Never use a hammer on any wrench other than a Striking Face wrench.
- Discard any wrench with broken or battered points.
- Never use a pipe wrench to bend, raise, or lift a pipe.

PLIERS/CUTTERS/PRYBARS

- Plastic or vinyl covered pliers handles are not intended to act as insulation; don't use on live electrical circuits.
- Don't use pliers or cutters for cutting hardened wire unless they were designed for that purpose.
- Always cut at right angles.
- Don't use any prybar as a chisel, punch, or hammer.

HAMMERS

- Never strike one hammer against a hardened object, such as another hammer.
- Always grasp a hammer handle firmly, close to the end.
- Strike the object with the full face of the hammer.
- Never work with a hammer which has a loose head.
- Discard hammer if face is chipped or mushroomed.
- Wear approved eye protection when using striking tools.
- Protect bystanders with approved eye protection.

PUNCHES/CHISELS

- Never use a punch or chisel with a chipped or mushroomed end; dress mushroomed chisels and punches with a file.
- Hold a chisel or a punch with a tool holder if possible.
- When using a chisel on a small piece, clamp the piece firmly in a vise, and chip toward the stationary jaw.
- Wear approved eye protection when using these tools.
- Protect bystanders with approved eye protection.

SCREWDRIVERS

- Don't use a screwdriver for prying, punching, chiseling, scoring, or scraping.
- Use the right type of screwdriver for the job; match the tip to the fastener.
- Don't interchange POZIDRIV®, PHILLIPS®, or REED AND PRINCE screwdrivers.
- Screwdriver handles are not intended to act as insulation; don't use on live electrical circuits.
- Don't use a screwdriver with rounded edges because it will slip – redress with a file.

RATCHETS AND HANDLES

- Periodically clean and lubricate ratchet mechanisms with a light grade oil. Do not replace parts individually; ratchets should be rebuilt with the entire contents of service kit.
- Never hammer or put a pipe extension on a ratchet or handle for added leverage.
- Always support the ratchet head when using socket extensions, but do not put your hand on the head or you may interfere with the action of its reversing mechanism.
- When breaking loose a fastener, apply a small amount of pressure as a test to be sure the ratchet's gear wheel is engaged with the pawl.

SOCKETS

- Never use hand sockets on power or impact wrenches.
- Select the right size socket for the job.
- Never cock any wrench or socket.
- Select only impact sockets for use with air or electric impact wrenches.
- Replace sockets showing cracks or wear.
- Keep sockets clean.
- Always use approved eye protection when using power or impact sockets.

STORAGE UNITS

- Don’t open more than one loaded drawer at a time. Close each drawer before opening up another.
- Close lids and lock drawers and doors before moving storage units.
- Don’t pull on a tool cabinet; push it in front of you.
- Set the brakes on the locking casters after the cabinet has been rolled to your work.

MAINTENANCE SCHEDULE 1.2

GENERAL

The table below lists the maintenance requirements for Touring models. If you are familiar with the procedures, just refer to the table for the recommended service interval. If necessary, see the quick reference table on the next page for the required specifications. If more detailed information is needed, turn to the sections which follow for step-by-step instructions.

Table 1-1. Scheduled Maintenance Intervals

ITEM	PROCEDURE	1000 mi 1600 km	5000 mi 8000 km	10,000 mi 16,000 km	15,000 mi 24,000 km	20,000 mi 32,000 km	25,000 mi 40,000 km	NOTES
Engine oil and filter	Replace	X	X	X	X	X	X	
Oil lines and brake system	Inspect for leaks	X	X	X	X	X	X	1
Air cleaner	Inspect, service as required	X	X	X	X	X	X	
Tires	Check pressure, inspect tread	X	X	X	X	X	X	
Wheel spokes	Check tightness	X	X			X		1, 4
Primary chain tension	Check adjustment	X	X	X	X	X	X	
Primary chaincase lubricant	Replace	X		X		X		
Clutch	Check adjustment	X	X	X	X	X	X	1
Transmission lubricant	Replace	X				X		
Drive belt and sprockets	Inspect, adjust belt	X	X	X	X	X	X	1
Throttle, brake, clutch and enrichener controls	Check, adjust and lubricate	X	X	X	X	X	X	1, 4
Jiffy stand	Inspect and lubricate	X	X	X	X	X	X	1
Fuel valve, lines and fittings	Inspect for leaks	X	X	X	X	X	X	1, 4
Fuel filter	Clean (EFI: replace)						X	1
Brake fluid	Check levels and condition	X	X	X	X	X	X	5
Brake pads and discs	Inspect for wear	X	X	X	X	X	X	
Spark plugs	Inspect	X	X		X		X	
	Replace			X		X		
Electrical equipment and switches	Check operation	X	X	X	X	X	X	
Engine idle speed	Check adjustment	X	X	X	X	X	X	1
Front fork oil	Replace							1, 2
Steering head bearings	Lubricate	X		X		X		2
	Adjust						X	1
Air suspension	Check pressure, operation and leakage	X	X	X	X	X	X	1
Windshield bushings	Inspect			X		X		1
Cruise control	Inspect disengage switch and components	X	X	X	X	X	X	1
Fuel door, Tour-pak, saddlebags	Lubricate hinges and latches	X	X	X	X	X	X	
Critical fasteners	Check tightness	X		X		X		1
Engine mounts and stabilizer links	Inspect			X		X		1
Battery	Check battery and clean connections							3
Road test	Verify component and system functions	X	X	X	X	X	X	

NOTES:

1. Should be performed by an authorized Harley-Davidson dealer, unless you have the proper tools, service data and are mechanically qualified.
2. Disassemble, lubricate and inspect every 50,000 miles (80,000 km).
3. Perform annually.
4. Not all vehicles are equipped with enrichener, fuel valve or spoke wheels.
5. Change DOT 4 brake fluid and flush every two years.

Table 1-2. Quick Reference Data

ITEM	SPECIFICATION	DATA
Engine oil and filter	Drain plug torque	14-21 ft-lbs (19-28 Nm)
	Oil capacity	4 qt. (3.8 L)
	Filter	Hand tighten 1/2-3/4 turn after gasket contact
	Chrome filter part number	63798-99
	Black filter part number	63731-99
Air cleaner	Air cleaner cover bracket screw torque	40-60 **in-lbs** (5-7 Nm)
	Air cleaner cover screw torque	36-60 **in-lbs** (4-7 Nm)
	Air cleaner cover screw threadlocker	Loctite Medium Strength Threadlocker 243 (blue), Part No. 99642-97 (6 ml)
Tire condition and pressure	Pressure: solo rider	Front: 36 psi (2.5 bar), Rear: 36 psi (2.5 bar)
	Pressure: rider with passenger	Front: 36 psi (2.5 bar), Rear: 40 psi (2.8 bar)
	Wear	Replace tire if 1/32 in. (0.8 mm) or less of tread pattern remains
Wheel spokes	Spoke nipple torque	40-50 **in-lbs** (4.5-5.6 Nm)
Primary chain tension	Deflection with engine cold	5/8-7/8 in. (15.9-22.2 mm)
	Deflection with engine hot	3/8-5/8 in. (9.5-15.9 mm)
	Chain tensioner nut torque	21-29 ft-lbs (29-39 Nm)
	Primary chain inspection cover torque	84-108 **in-lbs** (10-12 Nm)
Primary chaincase lubricant	Lubricant capacity	32 oz (946 mL)
	Primary chaincase drain plug torque	36-60 **in-lbs** (4-7 Nm)
	FORMULA+ TRANSMISSION AND PRIMARY CHAINCASE LUBRICANT part number	99851-05 (qt)
Clutch adjustment	Free play at adjuster screw	1/2-1 turn
	Free play at hand lever	1/16-1/8 in. (1.6-3.2 mm)
	Adjuster screw locknut torque	72-120 **in-lbs** (8-14 Nm)
	Clutch inspection cover torque	84-108 **in-lbs** (10-12 Nm)
Transmission lubricant	Lubricant level	Dipstick at FULL with motorcycle level and filler plug resting on threads
	Lubricant capacity	20-24 oz (590-710 mL)
	FORMULA+ TRANSMISSION AND PRIMARY CHAINCASE LUBRICANT part number	99851-05 (qt)
	Transmission drain plug torque	14-21 ft-lbs (19-28 Nm)
	Filler plug torque	25-75 **in-lbs** (3-9 Nm)
Drive belt	Upward force at midpoint of bottom belt strand	10 lb. (4.5 kg)
	Deflection with motorcycle on jiffy stand without rider or luggage and 10 psi (69 kPa) in rear shocks	1/4 - 5/16 in. (6.4-7.9 mm)
	Deflection with motorcycle upright and rear wheel in the air	3/16 - 1/4 in. (4.8-6.4 mm)
Throttle and clutch cables	Lubricant part number	*Super Oil*, 94968-85TV (1/4 fl. oz)
	Handlebar clamp screw torque	60-80 **in-lbs** (6.8-9.0 Nm)
	Handlebar switch housing screw torque	35-45 **in-lbs** (4-5 Nm)
Enrichener control	Hex nut torque	20-35 **in-lbs** (2-4 Nm)
Fuel filter	Hex jam nut torque	15-20 ft-lbs (20-27 Nm)
Brake Fluid Reservoir Level	*DOT 4 Brake Fluid* part number	99953-99A (12 oz)
	Level	1/ 8 inch (3.2 mm) from the top
	Master cylinder reservoir cover torque	6-8 **in-lbs** (0.7-0.9 Nm)

Table 1-2. Quick Reference Data

ITEM	SPECIFICATION	DATA
Brake pad linings and discs	Minimum brake pad thickness	0.04 in. (1.02 mm)
	Minimum brake disc thickness	See stamp on side of disc
Spark plugs	Type	HD-6R12
	Gap	0.038-0.043 in. (0.97-1.09 mm)
	Torque	12-18 ft-lbs (16-24 Nm)
Engine idle speed	Idle speed	950-1050 rpm
Front Fork Oil	*Hydraulic Fork Oil (Type E)* part number	99884-80 (16 oz)
	Amount	See Section 2.15 FRONT FORKS
Steering head bearings	Neck fitting lubricant	*Special Purpose Grease*, 99857-97 (14 oz cartridge)
Critical fasteners, engine mounts and stabilizer links	See Section 1.19 CRITICAL FASTENERS.	
Battery	Lubricant part number	*Electrical Contact Lubricant*, 99861-02 (1 oz)
	Terminal bolt torque	60-96 **in-lbs** (6.8-10.9 Nm)
	Hold-down clamp screw torque	15-20 ft-lbs (20-27 Nm)

ENGINE OIL/FILTER 1.3

GENERAL

See Section 1.2 MAINTENANCE SCHEDULE for the required service interval.

NOTE

If the motorcycle is ridden hard, under dusty conditions, or in cold weather, the engine oil and filter should be changed more often.

PROCEDURE

1. Ride motorcycle until engine is at normal operating temperature.
2. Locate oil filler plug/dipstick on right side of motorcycle at top of transmission case. To remove the oil filler plug, pull steadily while moving plug back and forth.
3. Locate oil drain plug at front left side of the oil pan. Remove the oil drain plug and allow oil to drain completely.
4. Inspect the oil drain plug O-ring for cuts, tears or signs of deterioration. Replace as necessary.
5. Remove the oil filter as follows:
   a. Obtain the OIL FILTER WRENCH (HD-42311). The tool allows easy removal of the oil filter without risk of damage to the CKP sensor or cable.
   b. Place the jaws of the wrench over the oil filter with the tool oriented vertically. See Figure 1-1.
   c. Using a 3/8 inch drive with a 4 inch extension, turn wrench in a counterclockwise direction. Do not use with air tools.

NOTE

Use OIL FILTER WRENCH (HD-44067) if HD-42311 is not available.

6. Clean the oil filter mount flange of any old gasket material.
7. Lubricate gasket with clean engine oil and install **new** oil filter on filter mount. Hand tighten oil filter 1/2-3/4 turn after gasket first contacts filter mounting surface. Do **NOT** use OIL FILTER WRENCH for oil filter installation.

NOTE

Use of the Premium 5 micron synthetic media oil filter is highly recommended, Part No. 63798-99A (Chrome) or 63731-99A (Black).

8. Install engine oil drain plug and tighten to 14-21 ft-lbs (19-28 Nm).

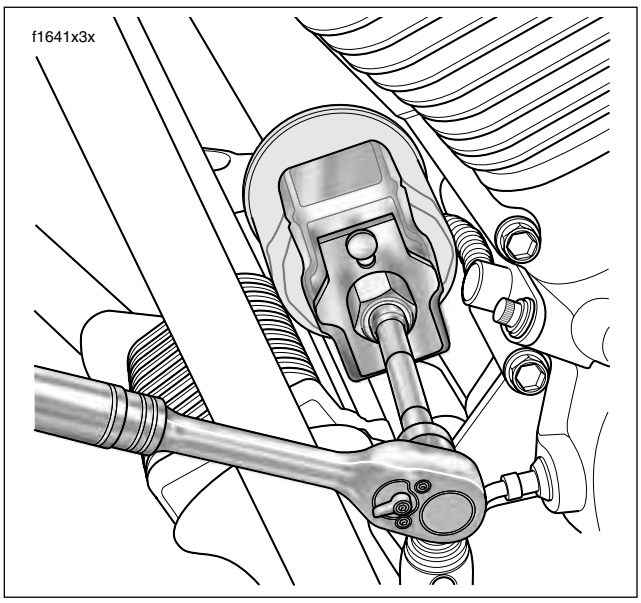

Figure 1-1. Remove Engine Oil Filter

9. With motorcycle resting on jiffy stand, add 3-1/2 quarts (3.3 liters) engine oil as specified in Table 1-3. Use the proper grade of oil for the lowest temperature expected before the next oil change.

Table 1-3. Recommended Engine Oils

Harley-Davidson Type	Viscosity	Harley-Davidson Rating	Lowest Ambient Temperature	Cold Weather Starts Below 50˚F (10˚C)
HD Multi-grade	SAE 10W40	HD 360	Below 40˚F (4˚C)	Excellent
HD Multi-grade	SAE 20W50	HD 360	Above 40˚F (4˚C)	Good
HD Regular Heavy	SAE 50	HD 360	Above 60˚F (16˚C)	Poor
HD Extra Heavy	SAE 60	HD 360	Above 80˚F (27˚C)	Poor

CAUTION

Oil level cannot be accurately measured on a cold engine. For pre-ride inspection, with motorcycle leaning on jiffy stand on level ground, oil should register on dipstick between arrows when engine is cold. Do not add oil to bring the level to the FULL mark on a COLD engine. (00185a)

10. Perform engine oil level **COLD CHECK** as follows:

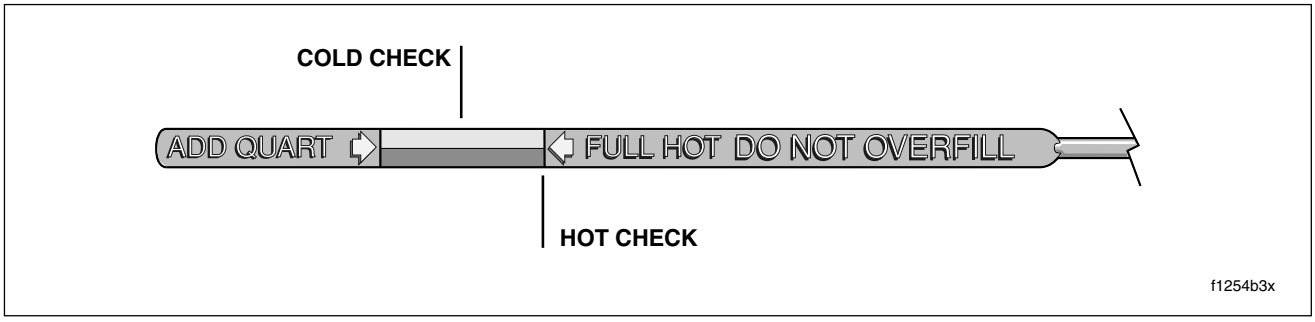

Figure 1-2. Engine Oil Dipstick

a. With the motorcycle resting on the jiffy stand on level ground, wipe off the dipstick and insert it back into the oil pan with the plug pushed completely into the fill spout.

b. Remove the dipstick and note the level of the oil. Oil level should register between the two arrows on the dipstick. See Figure 1-2. If oil level is at or below the lower arrow, add only enough oil to bring the level between the two arrows on the dipstick.

11. Perform engine oil level **HOT CHECK** as follows:

a. Ride motorcycle until engine is at normal operating temperature.

b. With the motorcycle resting on the jiffy stand on level ground, allow engine to idle for 1-2 minutes. Turn engine off.

c. Wipe off the dipstick and insert it back into the oil pan with the plug pushed completely into the fill spout.

d. Remove the dipstick and note the level of the oil. Add only enough oil to bring the level to the FULL mark on the dipstick. See Figure 1-2. Do not overfill.

12. Start engine and carefully check for leaks around hoses, drain plug and oil filter.

AIR CLEANER 1.4

GENERAL

See Section 1.2 MAINTENANCE SCHEDULE for the required service interval.

PROCEDURE

1. Remove large allen head socket screw in center of air cleaner cover. Remove air cleaner cover with rubber seal. See Figure 1-3.
2. Remove three T27 TORX screws to release cover bracket from filter element.

CAUTION

Never run the engine with the filter element removed. The filter prevents dirt and dust from entering the engine.

3. Remove filter element pulling two breather tubes from holes on inboard side.
4. Remove gasket from sleeve on inboard side of filter element. Discard gasket.
5. Remove breather tubes from fittings on two cylinder head breather bolts.
6. Thoroughly clean air cleaner cover, breather tubes and backplate with warm, soapy water.
7. Inspect the breather tubes and rubber seal for cuts, tears, holes or signs of deterioration. Replace as necessary. Direct compressed air through the breather tubes to be sure that they are not plugged.
8. Clean the filter element as follows:
   a. Wash the filter element in warm, soapy water. To remove soot and carbon, soak element for 30 minutes in warm water with mild detergent.

⚠WARNING

Do not use gasoline or solvents to clean filter element. Flammable cleaning agents can cause an intake system fire, which could result in death or serious injury. (00101a)

⚠WARNING

Compressed air can pierce the skin and flying debris from compressed air could cause serious eye injury. Wear safety glasses when working with compressed air. Never use your hand to check for air leaks or to determine air flow rates. (00061a)

   b. Dry the filter element using low pressure compressed air (32 psi/221 kPa maximum). Rotate the element while moving air nozzle up and down the element interior. Do not rap the element on a hard surface.

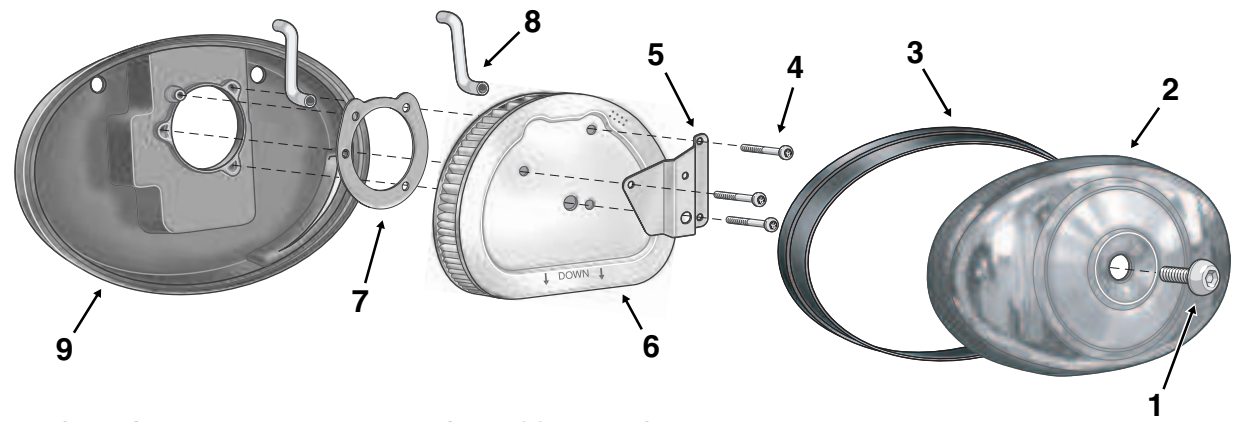

1. Cover Screw
2. Air Cleaner Cover
3. Rubber Seal
4. T27 Torx Screw (3)
5. Cover Bracket
6. Filter Element
7. Gasket
8. Breather Tube (2)
9. Backplate

f1721x4x

Figure 1-3. Air Cleaner Assembly

c. Hold the filter element up to a strong light source. The element can be considered sufficiently clean if light is uniformly visible through the media.

NOTE

Replace the filter element if damaged or if filter media cannot be adequately cleaned.

9. Slide **new** gasket over sleeve on inboard side of filter element. Be sure holes in gasket are aligned with those in filter.
10. Insert breather tubes about 1/4 inch (6.4 mm) into holes on inboard side of filter element.
11. Install breather tubes onto fittings of two cylinder head breather bolts.

NOTE

Air cleaner mounting without installation of the breather tubes allows crankcase vapors to be vented into the atmosphere in violation of legal emissions standards.

12. Place filter element onto backplate with the flat side down, so that hole on inboard side of element fits over molded boss in backplate.
13. Align holes in cover bracket with those in filter element and start three T27 TORX screws. Stamp on cover bracket points to downside. Alternately tighten screws to 40-60 **in-lbs** (4.5-6.8 Nm) in a crosswise pattern.
14. Verify that rubber seal is properly seated around perimeter of air cleaner cover.
15. Fit air cleaner cover into backplate. Apply a small dab of Loctite Medium Strength Threadlocker 243 (blue) to threads of large allen head socket screw. Install screw in center of air cleaner cover. Tighten screw to 36-60 **in-lbs** (4.1-6.8 Nm).

TIRES 1.5

GENERAL

See Section 1.2 MAINTENANCE SCHEDULE for the required service interval.

PROCEDURE

1. Inspect for wear as follows:
   a. Locate the arrows on the tire sidewalls. The arrows point to location of the tread wear indicator bars. See upper frame of Figure 1-4.
   b. Immediately replace tires if any tread wear indicator bar is on the tire tread surface, indicating that 1/32 inch (0.8 mm) or less of tire tread pattern remains. See lower frame of Figure 1-4.

NOTE

Harley-Davidson recommends that the tires be replaced ***BEFORE*** *the tread wear indicator bars are on the tire tread surface.*

2. Inspect for damage. Replace tires if:
   - Cords or fabric become visible through cracked sidewalls, snags or deep cuts.
   - Bump, bulge or split line is observed.
   - Puncture, deep cut or other damage is present that is not repairable.
3. Check tire pressure.

Table 1-4. Tire Pressure (Cold)

DUNLOP TIRES ONLY	FRONT		REAR	
	PSI	BARS	PSI	BARS
Solo Rider	36	2.5	36	2.5
Rider & One Passenger	36	2.5	40	2.8

⚠WARNING

Do not inflate tire beyond maximum pressure as specified on sidewall. Over inflated tires can blow out, which could result in death or serious injury. (00027a)

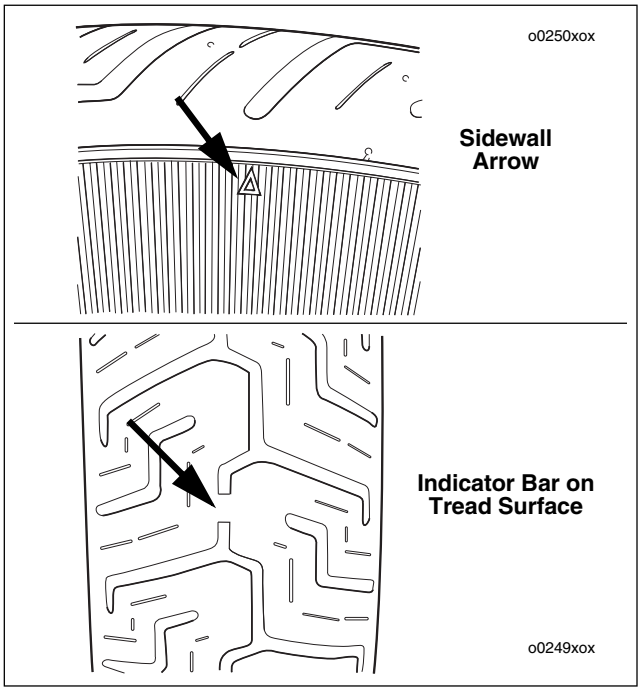

Figure 1-4. Tread Wear Indicator Bars

WHEEL SPOKES 1.6

GENERAL

See Section 1.2 MAINTENANCE SCHEDULE for the required service interval.

PROCEDURE

1. Raise wheel off the ground.

CAUTION

If nipples require more than one full turn to tighten spoke, remove tire to check that spoke protrusion has not damaged tube.

2. Lightly tap each spoke with a spoke wrench. Loose spokes will sound dull and must be tightened. Tighten spokes to 40-50 **in-lbs** (4.5-5.6 Nm). If more than a few spokes are loose, true the entire wheel following the procedure under Section 2.7 TRUING LACED WHEEL.

PRIMARY CHAIN/LUBRICANT 1.7

GENERAL

See Section 1.2 MAINTENANCE SCHEDULE for the required service interval.

PROCEDURE

PRIMARY CHAIN ADJUSTMENT

1. Remove seat. See Section 2.25 SEAT, REMOVAL.

WARNING

To prevent accidental vehicle start-up, which could cause death or serious injury, disconnect negative (-) battery cable before proceeding. (00048a)

2. Unthread bolt and remove battery negative cable (black) from battery negative (-) terminal.

3. See Figure 1-5. Remove four T27 TORX screws to free the primary chain inspection cover from the primary chaincase cover.

4. Check the primary chain tension. Push on the upper strand to verify that it has free up and down movement midway between the engine compensating sprocket (front) and the clutch sprocket (rear).

5. Measure the free play to be sure that it falls within the range specified for a hot or cold engine. Refer to Table 1-5.

Table 1-5. Primary Chain Adjustment

(Free Play)	Inches	Millimeters
COLD ENGINE	5/8-7/8 inch	15.9-22.2 mm
HOT ENGINE	3/8-5/8 inch	9.5-15.9 mm

6. If the chain is too tight or too loose, then adjust as follows:

   a. Locate the primary chain tensioner assembly and loosen the top center nut a maximum of two turns. See Figure 1-6.

   b. Raise or lower the chain tensioner assembly as necessary to obtain the specified free play.

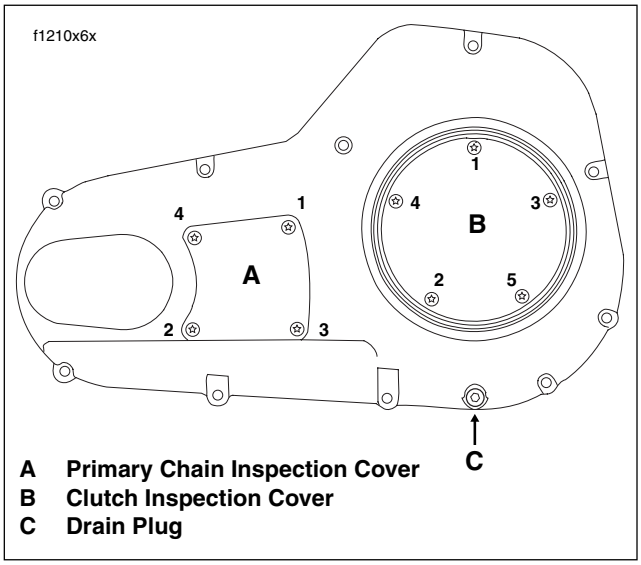

A Primary Chain Inspection Cover
B Clutch Inspection Cover
C Drain Plug

Figure 1-5. Primary Chaincase Cover

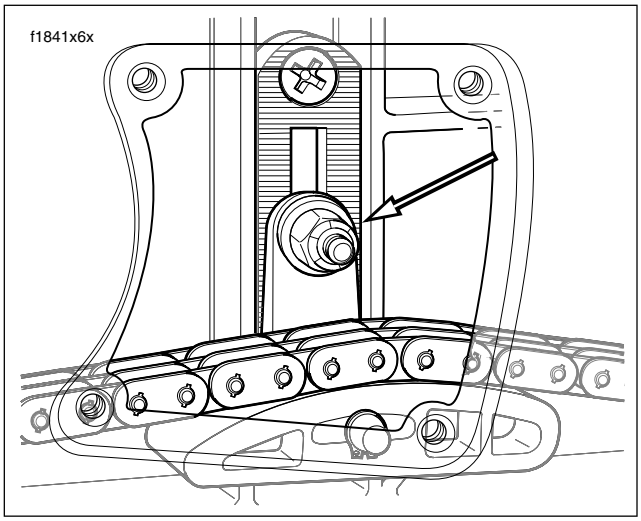

Figure 1-6. Primary Chain Tensioner Assembly

NOTE

As chains stretch and wear, they run tighter at one spot than another. Always adjust the free play at the tightest spot in the chain. Replace the primary chain if it is worn to the point where it cannot be properly adjusted.

CAUTION

Always keep the primary chain properly adjusted. Allowing the chain to run too tight or too loose will result in excessive chain and sprocket wear.

c. Tighten the top center nut of the chain tensioner assembly to 21-29 ft-lbs (29-39 Nm).

7. Align holes in **new** gasket with holes in the primary chaincase cover. Install four T27 TORX screws to secure primary chain inspection cover to primary chaincase cover. Alternately tighten screws to 84-108 **in-lbs** (10-12 Nm) in a crosswise pattern. See Figure 1-5.

8. Insert bolt through battery negative cable (black) into threaded hole of battery negative (-) terminal. Tighten bolt to 60-96 **in-lbs** (6.8-10.9 Nm).

9. Install seat. See Section 2.25 SEAT, INSTALLATION.

PRIMARY CHAIN LUBRICANT

1. Remove five T27 TORX screws (with captive washers) to free clutch inspection cover from primary chaincase cover.

2. Remove magnetic drain plug at bottom of primary chaincase cover. Drain lubricant into suitable container. See Figure 1-5.

3. Clean drain plug. If plug has accumulated a lot of debris, inspect the condition of chaincase components.

4. Inspect drain plug O-ring for cuts, tears or signs of deterioration. Replace as necessary.

5. Install drain plug back into primary chaincase cover. Tighten plug to 36-60 **in-lbs** (4.1-6.8 Nm).

CAUTION

Do not overfill the primary chaincase with lubricant. Overfilling can cause rough clutch engagement, incomplete disengagement, clutch drag and/or difficulty in finding neutral at engine idle. (00199b)

⚠WARNING

Be sure that no lubricant gets on tires, wheels or brakes when changing fluid. Traction can be adversely affected, which could result in loss of control of the motorcycle and death or serious injury. (00047c)

6. Pour 32 ounces (946 ml) of Harley-Davidson FORMULA+ TRANSMISSION AND PRIMARY CHAINCASE LUBRICANT through the clutch inspection cover opening, Part No. 99851-05 (quart). See Figure 1-7.

7. To avoid punching holes in the clutch inspection cover gasket or enlarging existing holes, install clutch inspection cover and **new** gasket as follows:

   a. Align the triangular shaped hole in the gasket with the top hole in the clutch inspection cover. Be sure the rubber molding and the words “towards clutch” face the motorcycle.

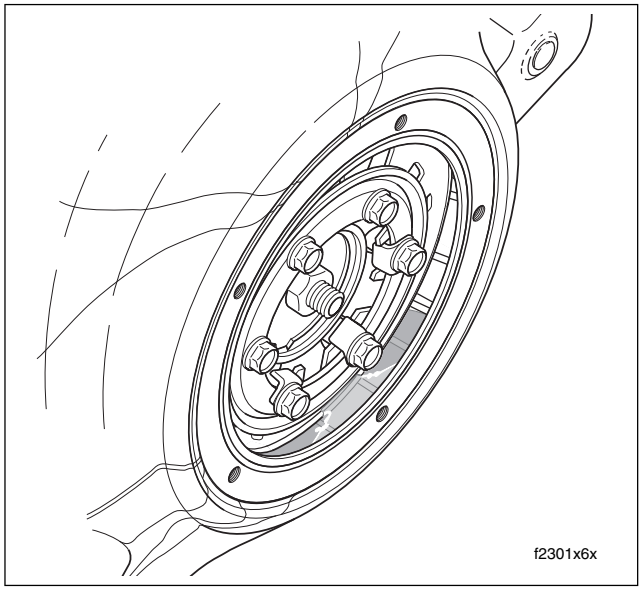

Figure 1-7. Add Primary Chaincase Lubricant

   b. Insert screw (with captive washer) through clutch inspection cover and carefully thread it all the way through triangular shaped hole in gasket. Do not push screw through hole.

   c. Hang the clutch inspection cover on the primary chaincase cover flange by starting the top cover screw.

   d. Start the remaining four screws (with captive washers).

   e. Using a T27 TORX drive head, alternately tighten screws to 84-108 **in-lbs** (10-12 Nm) in the pattern shown in Figure 1-5.

CLUTCH ADJUSTMENT 1.8

GENERAL

See Section 1.2 MAINTENANCE SCHEDULE for the required service interval.

PROCEDURE

CAUTION

Perform the clutch adjustment with the motorcycle at room temperature. The clearance at the adjuster screw will increase as the powertrain temperature increases. If adjuster screw is adjusted while the powertrain is hot, clearance at push rod bearing could be insufficient with powertrain cold and clutch slippage could occur.

NOTE

Perform adjustment procedure whenever any clutch components are replaced. Then repeat adjustment after first 500 miles (800 km) of use.

1. Stand motorcycle upright and level.
2. Remove five T27 TORX screws (with captive washers) to free clutch inspection cover from primary chaincase cover.
3. See Figure 1-8. Slide rubber boot off cable adjuster. Holding cable adjuster with 1/2 inch wrench, loosen jam nut using a 9/16 inch wrench. Back jam nut away from cable adjuster. Move adjuster toward jam nut to introduce a large amount of free play at hand lever.

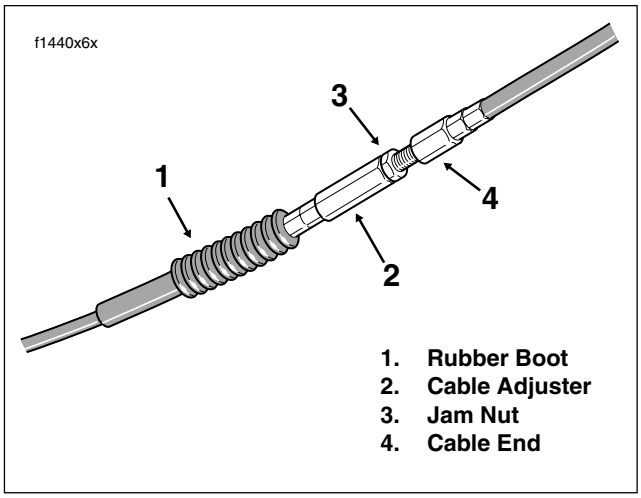

Figure 1-8. Clutch Cable Adjuster Mechanism

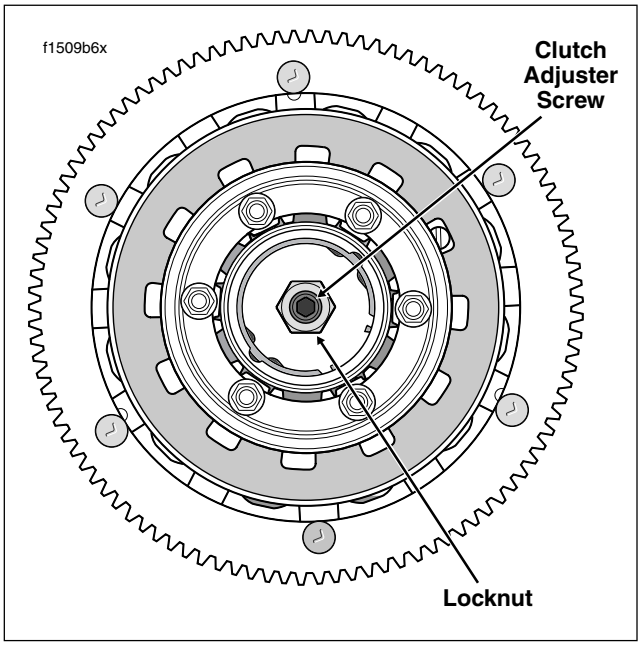

Figure 1-9. Clutch Assembly

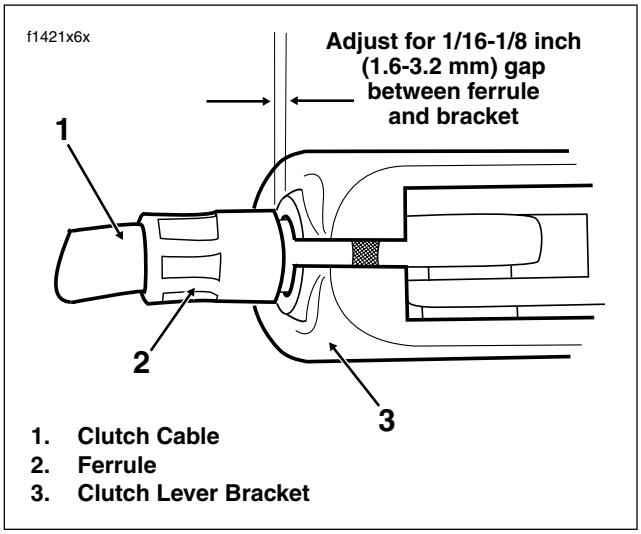

Figure 1-10. Adjust Clutch Free Play

4. See Figure 1-9. Loosen locknut on clutch adjuster screw. To take up all free play in push rods, turn screw inward (clockwise) until lightly seated.
5. Back out adjuster screw 1/2 to 1 turn. While holding adjuster screw with an allen wrench, tighten locknut to 72-120 **in-lbs** (8-14 Nm).
6. Squeeze clutch lever to maximum limit three times to set ball and ramp release mechanism.

7. Turn cable adjuster away from jam nut until slack is eliminated at hand lever. Pull clutch cable ferrule away from clutch lever bracket to check free play. Turn cable adjuster as necessary to obtain 1/16 to 1/8 inch (1.6-3.2 mm) free play between end of cable ferrule and clutch lever bracket, as shown in Figure 1-10.

8. Hold adjuster with 1/2 inch wrench. Using 9/16 inch wrench, tighten jam nut against cable adjuster. Cover cable adjuster mechanism with rubber boot.

9. To avoid punching holes in the clutch inspection cover gasket or enlarging existing holes, install clutch inspection cover and **new** gasket as follows:

   a. Align the triangular shaped hole in the gasket with the top hole in the clutch inspection cover. Be sure the rubber molding and the words “towards clutch” face the motorcycle.

   b. Insert screw (with captive washer) through clutch inspection cover and carefully thread it all the way through triangular shaped hole in gasket. Do not push screw through hole.

   c. Hang the clutch inspection cover on the primary chaincase cover flange by starting the top cover screw.

   d. Start the remaining four screws (with captive washers).

   e. Using a T27 TORX drive head, alternately tighten screws to 84-108 **in-lbs** (10-12 Nm) in the pattern shown in Figure 1-5.

TRANSMISSION LUBRICANT 1.9

GENERAL

See Section 1.2 MAINTENANCE SCHEDULE for the required service interval.

PROCEDURE

1. Remove the filler plug from the clutch release cover on the right side of the transmission case. See Figure 1-11. Check the O-ring for tears, cuts or general deterioration. Replace as necessary. See Figure 1-12.
2. Locate transmission drain plug on the right side of the oil pan. Remove the magnetic plug and drain the transmission lubricant into a suitable container.
3. Remove any foreign material from the drain plug. Check the O-ring on the drain plug for tears, cuts or general deterioration. Replace as necessary.
4. Install the transmission lubricant drain plug and tighten to 14-21 ft-lbs (19-28 Nm).

WARNING

When adding lubricant, do not allow dirt, debris or other contaminants to enter the transmission case. Exercise caution so that lubricant does not contact rear wheel, tire and brake components. Such contact can adversely affect traction and may lead to loss of vehicle control, which could result in death or serious injury.

5. Fill the transmission with 20-24 oz. (590-710 ml) of transmission lubricant or until the lubricant level on the dipstick of the filler plug is at the F(ULL) mark with the motorcycle in a level, upright position and the filler plug resting on the threads.

   Use only Harley-Davidson FORMULA+ TRANSMISSION AND PRIMARY CHAINCASE LUBRICANT, Part No. 99851-05 (quart).

6. Install the transmission filler plug/dipstick in the clutch release cover. Tighten the plug to 25-75 **in-lbs** (2.8-8.5 Nm).

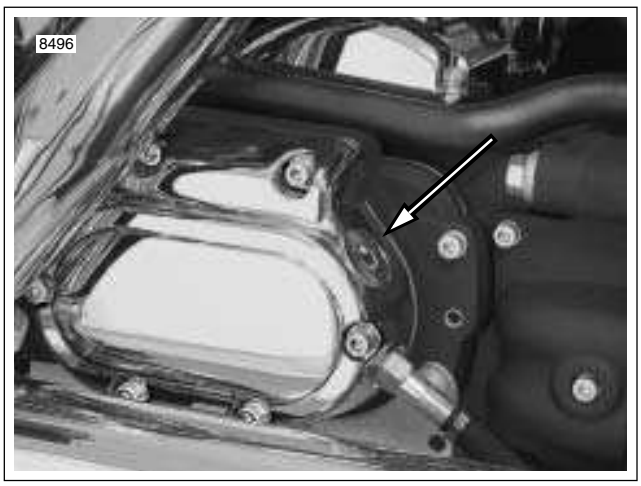

Figure 1-11. Clutch Release Cover

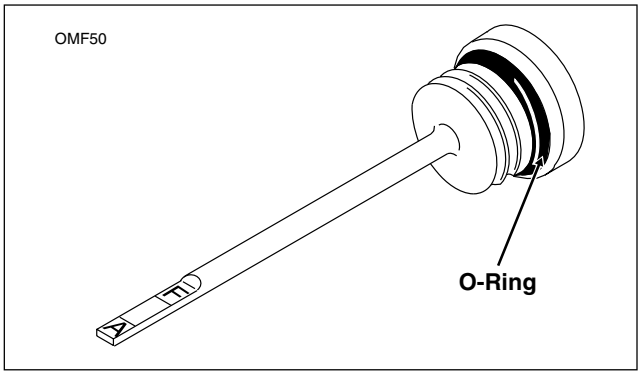

Figure 1-12. Transmission Lubricant Filler Plug/Dipstick

DRIVE BELT 1.10

GENERAL

See Section 1.2 MAINTENANCE SCHEDULE for the required service interval.

PROCEDURE

1. Remove left side saddlebag. See Section 2.26 SADDLEBAG, REMOVAL.
2. Obtain BELT TENSION GAUGE (HD-35381A), or install adapter (HD-35381-3) on old style gauge. See Figure 1-13.
3. Apply 10 lbs. (4.5 kg) of force at the midpoint of the bottom belt strand. See Figure 1-14. Check deflection at the loosest spot in the belt with the transmission in neutral and the motorcycle cold. Belt deflection should be as follows:

Table 1-6. Belt Deflection

Orientation	Inches	Millimeters
On Jiffy Stand Without Rider or Luggage 10 psi (69 kPa) in Rear Shocks	1/4 - 5/16	6.4 - 7.9
Motorcycle Upright With Rear Wheel in the Air	3/16 - 1/4	4.8 - 6.4

If belt deflection is within specification, install left side saddlebag. If adjustment is necessary, move to step 4.

4. Remove right side saddlebag. See Section 2.26 SADDLEBAG, REMOVAL.
5. Standing on right side of motorcycle, remove E-clip from groove at end of axle.
6. Obtain torque wrench with 1/2 inch drive head and AXLE NUT TORQUE ADAPTER (HD-47925). Proceed as follows:

NOTE

The Axle Nut Torque Adapter simplifies the belt adjustment procedure by allowing the cone nut to be properly tightened without having to remove the right side muffler. The tool also can be used to loosen the cone nut, as well as rotate the weld nut on the left side.

a. Install torque adapter perpendicular to torque wrench as shown in Figure 1-15.

b. Insert tool up between rear wheel and muffler to capture cone nut. For best clearance with muffler, be sure torque adapter is on the outboard side.

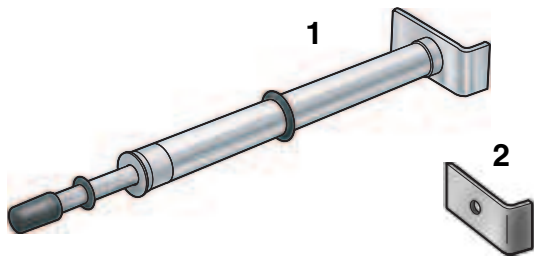

1. **Belt Tension Gauge (Part No. HD-35381A)**
2. **Belt Tension Gauge Adapter (Part No. HD-35381-3)**

Figure 1-13. Obtain Belt Tension Gauge

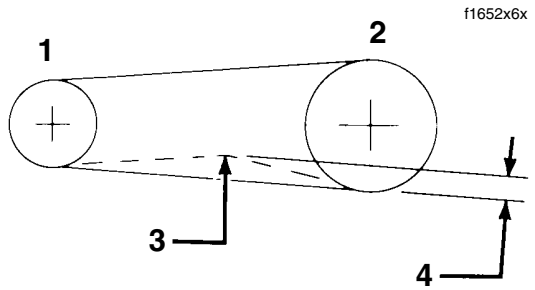

1. **Transmission Sprocket**
2. **Rear Wheel Sprocket**
3. **10 lbs. (4.5 kg) of Force**
4. **Refer to Table 1-6.**

Figure 1-14. Check and Adjust Belt Deflection

CAUTION

Since any extension can act as a torque multiplier, the torque wrench must be perpendicular to the torque adapter when the cone nut is tightened. The 90 degree orientation between the tools cancels the multiplier effect and prevents the cone nut from being over-tightened. If the torque adapter is kept inline with the torque wrench, the multiplier effect is in force and parts damage will occur.

c. Loosen cone nut, and then snug to 15-20 ft-lbs (20-27 Nm). See Figure 1-16.

7. If belt is too tight, move to step 8 to increase belt deflection. If belt is too loose, reduce belt deflection as follows:

a. Rotate weld nut on left side of axle in a clockwise direction.

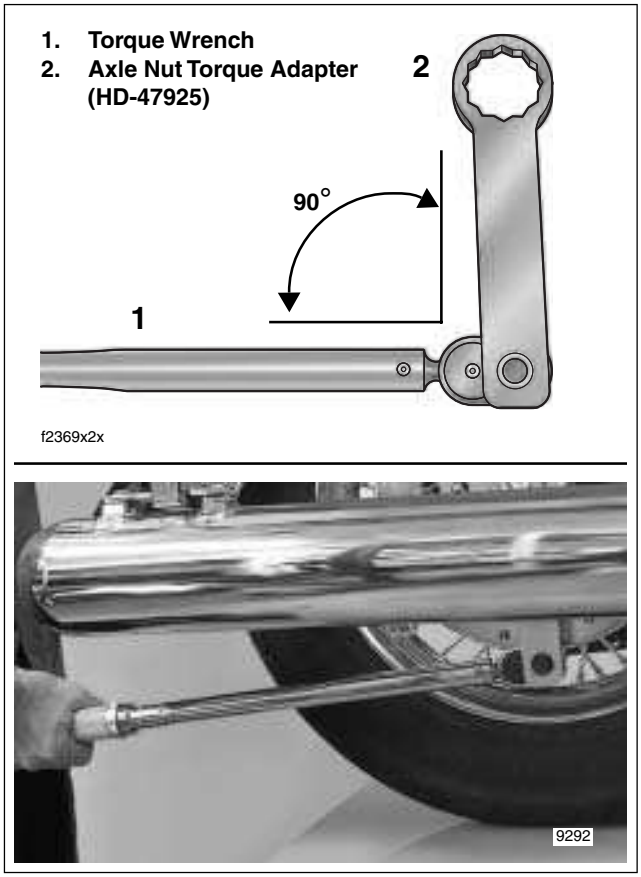

Figure 1-15. Install Tool Perpendicular to Torque Wrench

b. Check belt deflection. Apply 10 lbs. (4.5 kg) of force at the midpoint of the bottom belt strand. Belt deflection should be within the range specified in Table 1-6.

c. If belt is still too loose, repeat steps 7(a) through 7(b). If belt is now too tight, move to step 8.

8. If belt is too tight, increase belt deflection as follows:

a. Using a hydraulic center stand, raise motorcycle so that the rear wheel is off the ground.

b. Rotate weld nut on left side of axle in a counter-clockwise direction.

c. Push wheel forward slightly so that adjuster cam just contacts weld nub on both sides of rear swing-arm. See Figure 1-16.

d. Check belt deflection. Apply 10 lbs. (4.5 kg) of force at the midpoint of the bottom belt strand. Belt deflection should be within the range specified in Table 1-6.

e. If belt is still too tight, repeat steps 8(b) through 8(d). If belt is now too loose, move to step 7.

9. **Holding** weld nut on left side of axle, tighten cone nut on right side to 95-105 ft-lbs (128.8-142.4 Nm).

NOTE

If the axle moves during tightening of the cone nut, then the belt deflection procedure must be restarted.

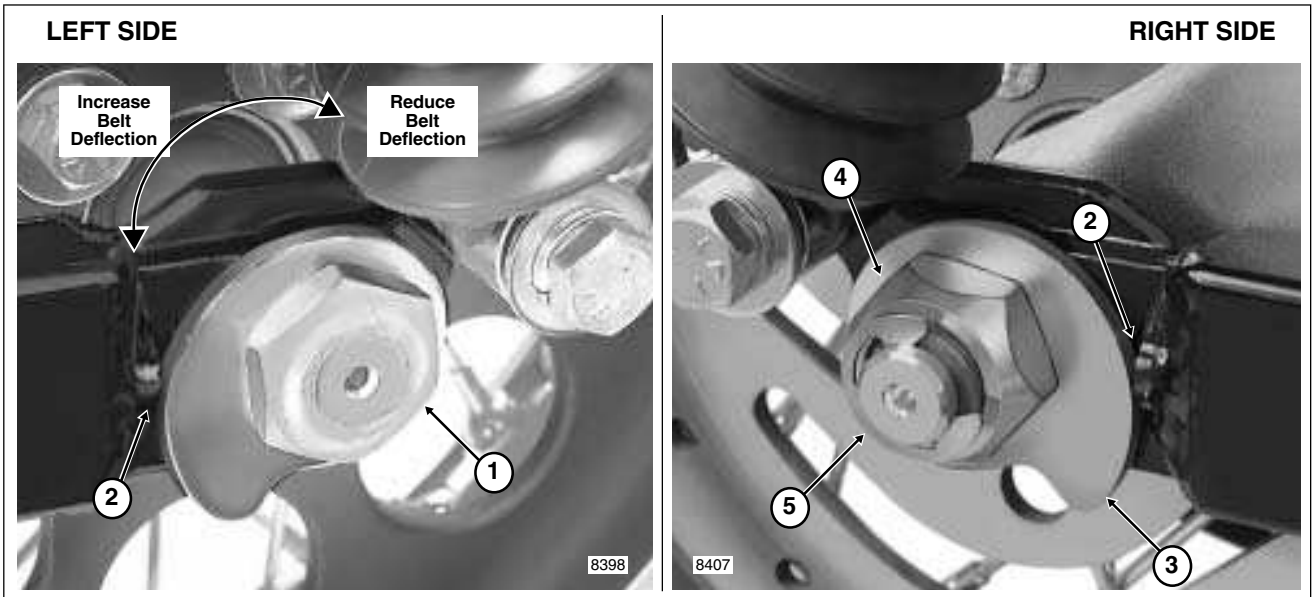

1. Weld Nut
2. Weld Nub
3. Adjuster Cam
4. Cone Nut
5. E-Clip

Figure 1-16. Move Rear Wheel Forward Until Adjuster Cams Just Contact Weld Nubs

10. Recheck belt deflection to verify that it is still within specification.

    If the belt deflection is not within specification, loosen cone nut and then snug to 15-20 ft-lbs (20-27 Nm) before returning to step 7.

11. With the flat side out, install **new** E-clip in groove on right side of axle.

12. Install saddlebags. See Section 2.26 SADDLEBAG, INSTALLATION.

THROTTLE CABLES 1.11

GENERAL

See Section 1.2 MAINTENANCE SCHEDULE for the required service interval.

PROCEDURE

LUBRICATION

CAUTION

Do not remove the switch housing assembly without first placing the 5/32 inch (4.0 mm) cardboard insert between the brake lever and lever bracket. Removal without the insert may result in damage to the rubber boot and plunger of the Front Stoplight Switch.

NOTE

Use the eyelet of an ordinary cable strap if the cardboard insert is not available.

1. Place the cardboard insert between the brake lever and lever bracket. See Figure 1-17.
2. Using a T25 TORX drive head, remove the upper and lower switch housing screws.
3. Using a T27 TORX drive head, loosen the upper screw securing the handlebar clamp to the master cylinder housing. Remove the lower clamp screw with flat washer.
4. Remove the brass ferrules from the notches on the inboard side of the throttle grip. Remove the ferrules from the cable end fittings. See Figure 1-18.

NOTE

On non cruise equipped models, remove the friction shoe from the end of the tension adjuster screw. The friction shoe is a loose fit and may fall out or become dislodged if the lower switch housing is turned upside down or shaken.

5. Remove the throttle grip from the end of the handlebar.
6. Move upper switch housing to the side in order to access lower housing.

⚠CAUTION

Lubit-8 Tufoil Chain and Cable Lube contains detergents. Avoid contact with eyes. Keep out of reach of children.

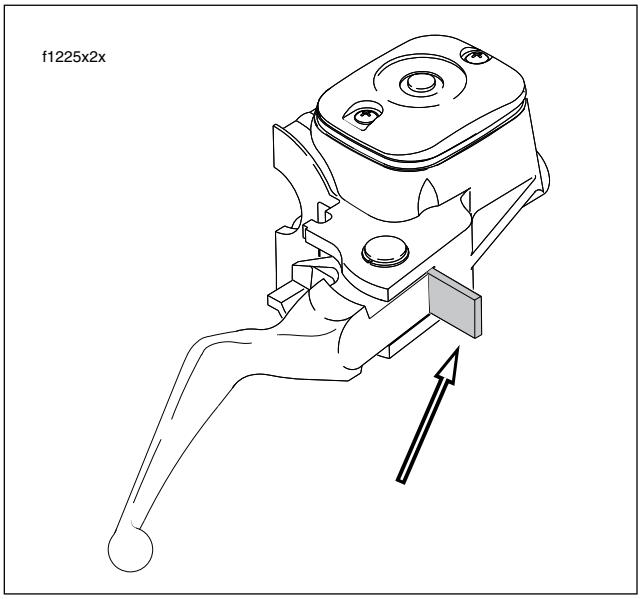

Figure 1-17. Install Cardboard Insert

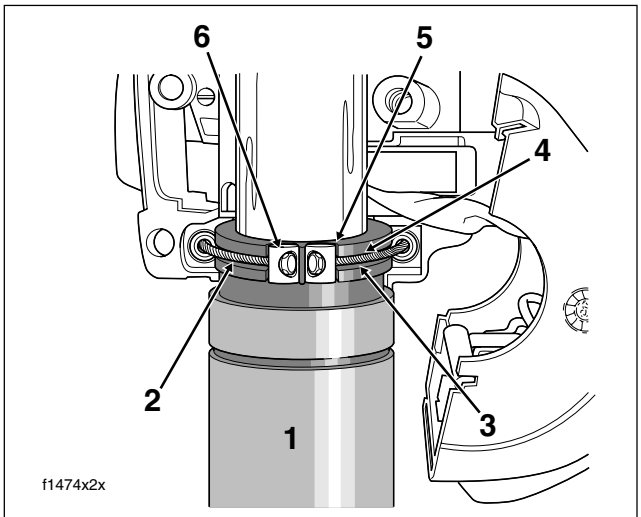

1.	Throttle Grip	4.	Groove
2.	Idle Cable	5.	Notch
3.	Throttle Cable	6.	Ferrule

Figure 1-18. Remove Throttle/Idle Cables

7. Obtain tube of Lubit-8 Tufoil Chain and Cable Lube (HD Part No. 94968-85TV- 1/4 fl. oz.). Insert pin of tube between throttle cable and cable housing inside lower switch housing. Squeeze tube to squirt a quantity of lubricant into cable housing moving pin around cable OD. See Figure 1-19.

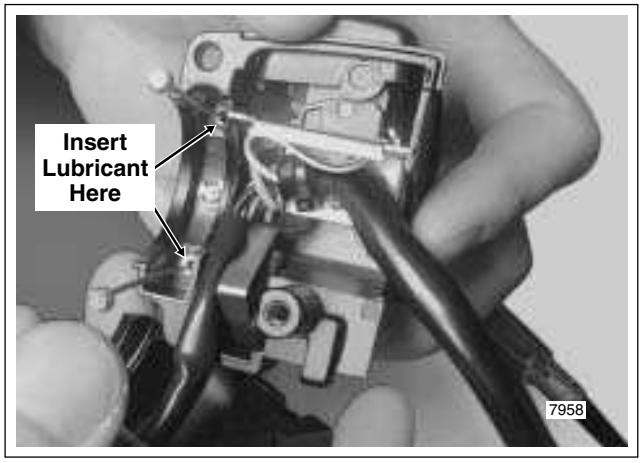

Figure 1-19. Lubricate Throttle/Idle Cables

8. Repeat the procedure squirting a quantity of lubricant between the idle cable and cable housing.

NOTE

On non cruise equipped models, install the friction shoe with the concave side up so that the pin hole is over the point of the adjuster screw. The friction shoe is a loose fit and may fall out or become dislodged if the lower switch housing is turned upside down or shaken.

9. Apply a light coating of graphite to the handlebar.
10. Slide the throttle grip over the end of the right handlebar until it bottoms against the closed end. Rotate the grip so that the ferrule notches are at the top. To prevent binding, pull the grip back about 1/8 inch (3.2 mm).
11. Position the lower switch housing beneath the throttle grip. Install the brass ferrules onto the cables so that the end fittings seat in the ferrule recess. Seat the ferrules in their respective notches on the throttle grip. Verify that the cables are captured in the grooves molded into the grip. See Figure 1-18.
12. Position the upper switch housing over the handlebar and lower switch housing. Verify that the wire harness conduit runs in the depression at the bottom of the handlebar.
13. Start the upper and lower switch housing screws, but do not tighten.
14. Position the brake lever/master cylinder assembly inboard of the switch housing assembly engaging the tab on the lower switch housing in the groove at the top of the brake lever bracket.
15. Align the holes in the handlebar clamp with those in the master cylinder housing and start the lower screw (with flat washer). Position for rider comfort. Beginning with the top screw, tighten the screws to 60-80 **in-lbs** (6.8-9.0 Nm) torque using a T27 TORX drive head.
16. Using a T25 TORX drive head, tighten the lower and upper switch housing screws to 35-45 **in-lbs** (4-5 Nm).

NOTE

Always tighten the lower switch housing screw first so that any gap between the upper and lower housings is at the front of the switch assembly.

17. Remove the cardboard insert between the brake lever and lever bracket.
18. Turn the Ignition/Light Key Switch to IGNITION and apply brake lever to test operation of brake lamp.

ADJUSTMENT

NOTE

For throttle and idle cable adjustment on cruise equipped models, see Section 8.31 CRUISE CONTROL (FLHRC, FLHTCU, FLTR).

1. Slide rubber boot off throttle cable adjuster mechanism. See Figure 1-20. Holding cable adjuster with a 3/8 inch wrench, loosen jam nut turning in a clockwise direction. Back jam nut away from cable adjuster until it stops. Turn cable adjuster clockwise until it contacts jam nut. Repeat procedure on idle cable adjuster.
2. Point the front wheel straight ahead. Gently turn the throttle grip so that the throttle is wide open (fully counterclockwise) and then hold in position. Now turn the cable adjuster counterclockwise until the throttle cam stop just touches the stop plate on the carburetor/induction module. See Figure 1-21. Release the throttle grip, turn cable adjuster counterclockwise an additional 1/2-1 full turn, and then tighten the jam nut against the cable adjuster. Cover cable adjuster mechanism with rubber boot.

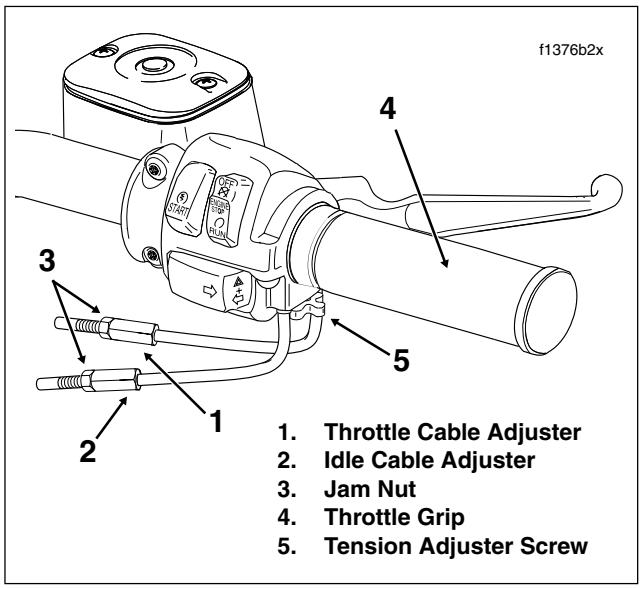

Figure 1-20. Throttle Cable Assembly - Throttle Side (FLHR/S)

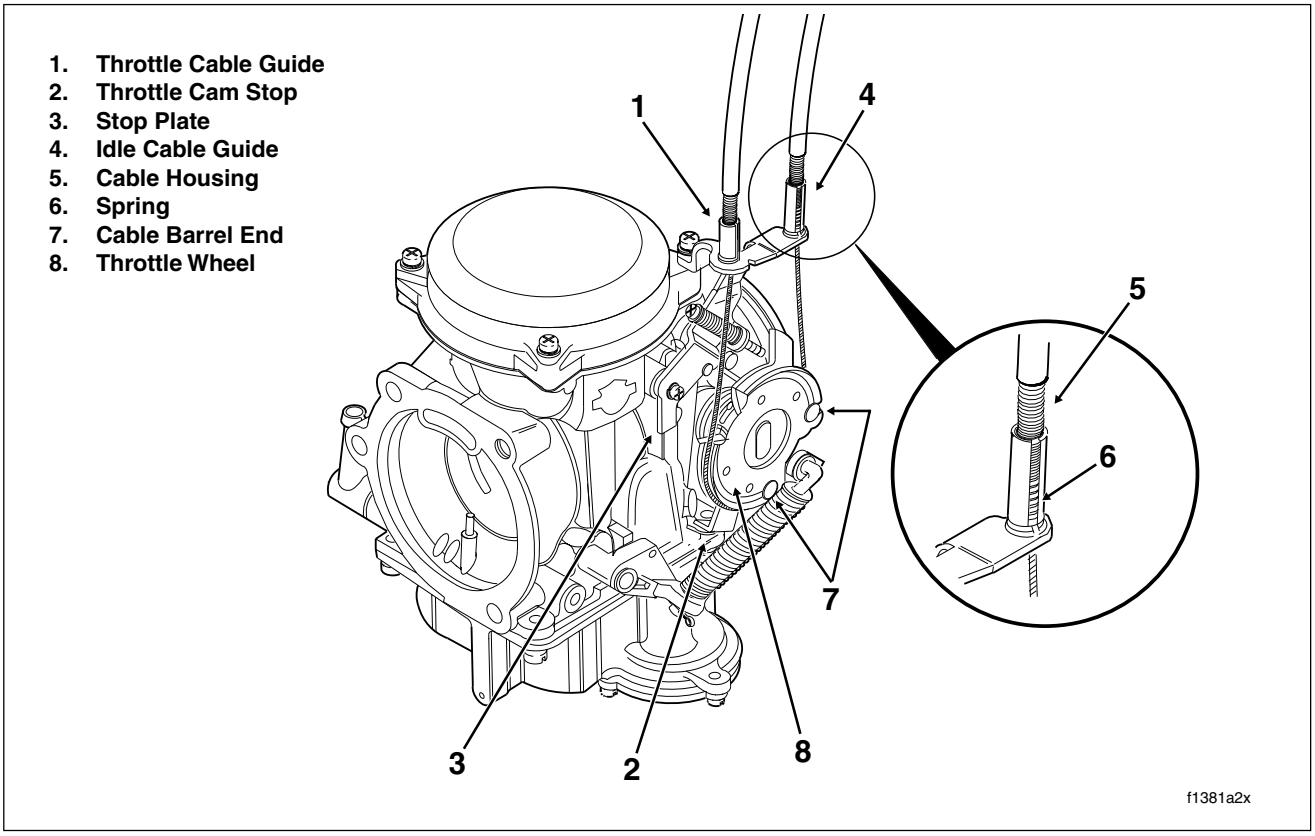

Figure 1-21. Throttle Cable Assembly - Carburetor Side

3. Turn the front wheel full right. Turn the idle cable adjuster counterclockwise until the cable housing just touches the spring in the cable guide (as seen through slot). Work the throttle grip to verify that the throttle cable returns to the idle position when released. If the cable does not return to idle, turn the cable adjuster clockwise slightly until the correct response is achieved. Tighten jam nut against the cable adjuster and cover cable adjuster mechanism with rubber boot.

4. Verify that the throttle control operates freely without binding. With the tension adjuster screw backed off, the throttle grip must freely return to the closed (idle) position. The throttle control also must open and close freely when the front wheel is turned to both the right and left fork stops. If the throttle grip does not return to the idle position freely, check the adjuster screw tension (if present). If the adjuster screw is backed off, inspect the cables for short bends.

ENRICHENER CONTROL 1.12

GENERAL

See Section 1.2 MAINTENANCE SCHEDULE for the required service interval.

PROCEDURE

NOTE

The fuel enrichener knob should open, remain open and then close without binding. The knurled plastic nut next to the enrichener knob controls the ease at which the cable slides within the conduit.

If adjustment is needed, proceed as follows:

1. See Figure 1-22. Loosen hex nut at backside of mounting bracket.
2. Move cable assembly free of slot in mounting bracket.
3. Hold cable assembly at flat with adjustable wrench. Hand turn knurled nut counterclockwise to reduce sliding resistance until knob slides inward unaided.
4. Turn knurled nut clockwise to increase sliding resistance until knob remains fully out without holding and then closes with relative ease.
5. Slide enrichener cable into slot of mounting bracket. Flat on threads must face rear of motorcycle for script on enrichener knob to be right side up. With external tooth lockwasher and hex nut positioned on the inboard side of the mounting bracket, tighten hex nut to 20-35 **in-lbs** (2.3-4.0 Nm).

CAUTION

Do not lubricate the cable or inside of conduit. The cable must have sliding resistance to work properly.

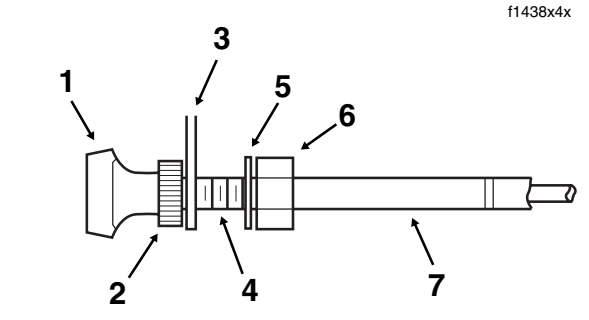

1. **Enrichener Knob**
2. **Knurled Nut**
3. **Mounting Bracket**
4. **Flat**
5. **Lockwasher**
6. **Hex Nut**
7. **Enrichener Cable**

Figure 1-22. Enrichener Control

FUEL SYSTEM 1.13

GENERAL

See Section 1.2 MAINTENANCE SCHEDULE for the required service interval.

PROCEDURE

LINES AND FITTINGS

Carefully inspect fuel system lines and fittings for leaks or damage.

FUEL FILTER (CARBURETED)

WARNING

When servicing the fuel system, do not smoke or allow open flame or sparks in the vicinity. Gasoline is extremely flammable and highly explosive, which could result in death or serious injury. (00330a)

1. Turn handle of fuel valve to OFF.

WARNING

Gasoline can drain from the carburetor fuel line when disconnected from fuel valve fitting. Gasoline is extremely flammable and highly explosive, which could result in death or serious injury. Wipe up spilled fuel immediately and dispose of rags in a suitable manner. (00256a)

2. Using a side cutters, cut clamp and remove hose from fuel outlet fitting at front of fuel valve. See Figure 1-23. Drain free end of hose into a suitable container.
3. Remove elbow of intake manifold vacuum tube from fitting on inboard side of fuel valve.
4. Attach a length of fuel hose to the fuel outlet fitting. The hose must be long enough to reach a suitable gasoline container.
5. Turn handle of fuel valve to RES(ERVE).
6. Using the correct hose adapter, connect the Mity-Vac® Hand Pump (HD-23738A) to vacuum fitting.

CAUTION

To avoid damage to the diaphragm of the fuel valve, do not apply a vacuum greater than 25 inches of Mercury (Hg) to vacuum fitting.

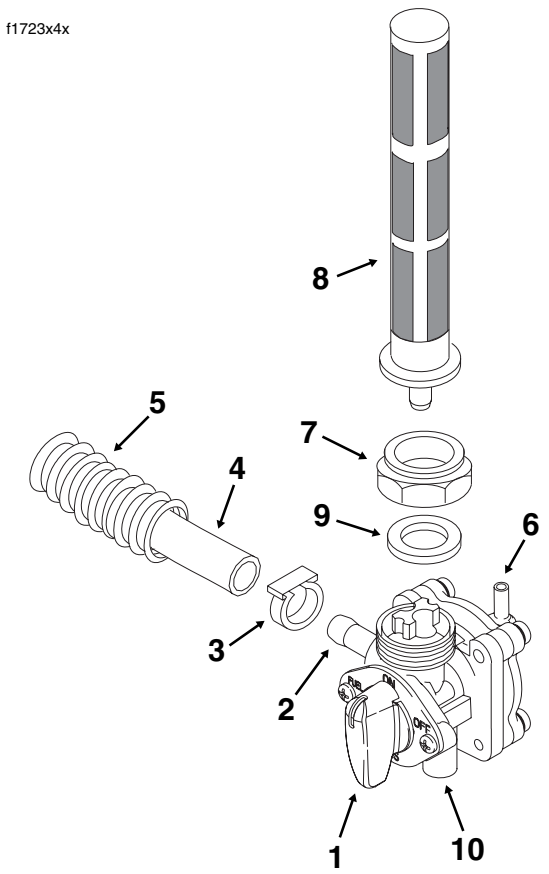

1. **Valve Handle**
2. **Fuel Outlet Fitting**
3. **Hose Clamp**
4. **Carburetor Fuel Inlet Hose**
5. **Convoluted Tubing**
6. **Vacuum Fitting**
7. **Jam Nut**
8. **Filter Strainer**
9. **Gasket**
10. **Atmospheric Pressure Port**

Figure 1-23. Vacuum Operated Fuel Valve

7. Gently apply a vacuum of 1-10 inches of Mercury (Hg) to vacuum fitting to get a good flow of gasoline through the valve.
8. When fuel tank is completely drained, remove Mity-Vac® Hand Pump from the vacuum fitting.
9. Holding fuel tank adapter, turn the hex jam nut in a clockwise direction to remove fuel valve assembly.
10. Remove fuel filter strainer from the valve head. Clean or replace.

Product: 2006 Harley Davidson Touring Motocycle Service Repair Workshop Manual
Full Download: https://www.arepairmanual.com/downloads/2006-harley-davidson-touring-motocycle-service-repair-workshop-manual/

11. Remove hex jam nut from the fuel valve.

12. Remove gasket from the valve head. Discard the gasket.

13. Install a **new** gasket on the valve head.

14. Install the fuel filter strainer fitting the internal tube into the larger hole in the valve head.

15. Clean threads and sealing surface of fuel tank adapter and inspect for damage. Replace if necessary.

16. With hex side down, turn jam nut two full turns in a counterclockwise direction to thread onto fuel tank adapter.

17. Insert fuel filter strainer into fuel tank. Holding hex jam nut to prevent rotation, turn fuel valve two full turns in a clockwise direction to thread onto hex jam nut.

⚠WARNING

Do not thread fuel valve onto hex jam nut more than two turns or nut may "bottom" on valve, a condition which may result in a gasoline leak. Any gasoline leak is a potential fire hazard that could result in death or serious injury.

18. Holding fuel valve to prevent rotation, turn hex jam nut in a counterclockwise direction until snug. Tighten hex jam nut to 15-20 ft-lbs (20.3-27.1 Nm).

CAUTION

Do not allow dirt or fluids to get into the vacuum tube that connects the fuel valve to the intake manifold. Contaminants can block the vacuum signal which could cause the fuel valve to malfunction.

19. Connect elbow of intake manifold vacuum tube to fitting on inboard side of fuel valve.

20. Slide **new** clamp onto free end of carburetor fuel inlet hose. Install hose onto fuel outlet fitting at front of fuel valve. Crimp clamp using HOSE CLAMP PLIERS (HD-97087-65B).

21. Turn handle of fuel valve to OFF and fill the fuel tank. Carefully inspect for leaks at fitting.

22. Turn valve handle to ON and start engine. No priming or special procedures are required to start fuel flow. Carefully inspect for leaks at fitting.

23. Stop engine and return valve to the OFF position.

FUEL FILTER CANISTER (FUEL INJECTED)

See Section 9.4 FUEL TANK (FUEL INJECTED), FUEL FILTER CANISTER, for replacement procedure.

Sample of manual. Download All 986 pages at:
https://www.arepairmanual.com/downloads/2006-harley-davidson-touring-motocycle-service-repair-workshop-manual/