Product: KOMATSU HD1500-5 Rigid Dump Truck Service Repair Workshop Manual(CEBM010701)
Full Download: https://www.arepairmanual.com/downloads/komatsu-hd1500-5-rigid-dump-truck-service-repair-workshop-manualcebm010701/

CEBM010701

Shop Manual

HD1500-5

DUMP TRUCK

SERIAL NUMBERS **A30049 - A30069**

KOMATSU®

Sample of manual. Download All 1248 pages at:
https://www.arepairmanual.com/downloads/komatsu-hd1500-5-rigid-dump-truck-service-repair-workshop-manualcebm010701/

Product: KOMATSU HD1500-5 Rigid Dump Truck Service Repair Workshop Manual(CEBM010701)
Full Download: https://www.arepairmanual.com/downloads/komatsu-hd1500-5-rig
id-dump-truck-service-repair-workshop-manualcebm010701/

Sample of manual. Download All 1248 pages at:
https://www.arepairmanual.com/downloads/komatsu-hd1500-5-rigid-dump-truck-service-repair-workshop-manualcebm010701/

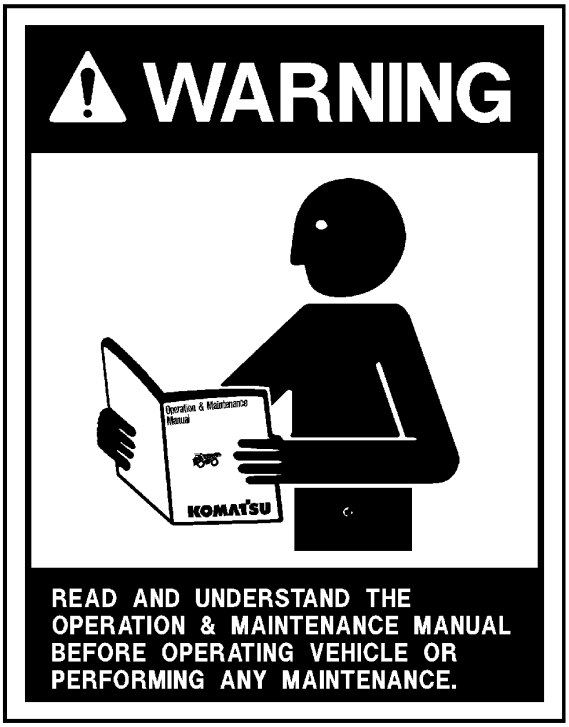

Unsafe use of this machine may cause serious injury or death. Operators and maintenance personnel must read and understand this manual before operating or maintaining this machine.

This manual should be kept in or near the machine for reference, and periodically reviewed by all personnel who will come into contact with it.

This material is proprietary to Komatsu America Corp (KAC), and is not to be reproduced, used, or disclosed except in accordance with written authorization from KAC.

It is the policy of the Company to improve products whenever it is possible and practical to do so. The Company reserves the right to make changes or add improvements at any time without incurring any obligation to install such changes on products sold previously.

Because of continuous research and development, periodic revisions may be made to this publication. Customers should contact their local Komatsu distributor for information on the latest revision.

CALIFORNIA
Proposition 65 Warning

Diesel engine exhaust, some of its constituents, and certain vehicle components contain or emit chemicals known to the State of California to cause cancer, birth defects or other reproductive harm.

CALIFORNIA
Proposition 65 Warning

Battery posts, terminals and related accessories contain lead and lead compounds, chemicals known to the State of California to cause cancer and birth defects or other reproductive harm. Wash hands after handling.

⚠WARNING

NON-OEM PARTS IN CRITICAL SYSTEMS

For safety reasons, Komatsu America Corp. strongly recommends against the use of non-OEM replacement parts in critical systems of all Komatsu equipment. Critical systems include but are not limited to steering, braking and operator safety systems.

Replacement parts manufactured and supplied by unauthorized sources may not be designed, manufactured or assembled to Komatsu's design specifications; accordingly, use of such parts may compromise the safe operation of Komatsu products and place the operator and others in danger should the part fail.

Komatsu is also aware of repair companies that will rework or modify an OEM part for reuse in critical systems. Komatsu does not generally authorize such repairs or modifications for the same reasons as noted above.

Use of non-OEM parts places full responsibility for the safe performance of the Komatsu product on the supplier and user. Komatsu will not in any case accept responsibility for the failure or performance of non-OEM parts in its products, including any damages or personal injury resulting from such use.

FOREWORD

This manual is written for use by the operator and/or the service technician and is designed to help these persons to become fully knowledgeable of the truck and all its systems in order to keep it operating safely and efficiently.

All operators and maintenance personnel must understand the content in this manual before maintaining or performing operational checks on the truck. All safety notices, warnings and cautions must be understood before repairing the truck.

This manual shows dimensioning of metric and (U.S. standard) units throughout. All references to right, left, front, or rear are made with respect to the operator's normal seated position, unless specifically stated otherwise.

Standard torque requirements are shown in torque charts in the Introduction section and individual torques are provided in the text in bold face type, such as **135 N·m (100 ft lb)**. All torque specifications have ±10% tolerance unless otherwise specified.

The illustrations used in this manual are typical of the component shown and may not be an exact reproduction of what is found on the truck.

A product identification plate is located on the frame in front of the right side front wheel and designates the truck model number, product identification number (vehicle serial number), and maximum Gross Vehicle Weight (GVW) rating.

The product identification number (vehicle serial number) contains information which will identify the original manufacturing bill of material for this unit. This complete number will be necessary for proper ordering of many service parts and/or warranty consideration.

The GVW is what determines the load on the drive train, frame, tires, and other components. The vehicle design and application guidelines are sensitive to the total maximum GVW. GVW is the total truck weight. This is equal to the empty vehicle weight + the fuel & lubricants + the payload.

To determine allowable payload: Service all lubricants to the proper level including the fuel tank. Weigh the empty truck. This includes all accessories, body liners, tailgates, etc. Record this value and subtract from the GVW rating. The result is the allowable payload.

NOTE: Accumulations of mud, frozen material, etc. become a part of the GVW and reduces allowable payload. To maximize payload and to keep from exceeding the GVW rating, these accumulations must be removed as often as practical.

⚠CAUTION

Exceeding the allowable payload will reduce expected life of truck components.

⚠WARNING

Unsafe use of this machine may cause serious injury or death. Operators and maintenance personnel must read this manual before operating or maintaining this machine. This manual should be kept in or near the machine for reference and periodically reviewed by all personnel who come in contact with it.

This alert symbol is used with the signal words, "caution", "danger", and "warning" in this manual to alert the reader to hazards arising from improper operating and maintenance practices.

DANGER

Danger identifies a specific potential hazard which will result in either injury or death if proper precautions are not used.

WARNING

Warning identifies a specific potential hazard which could result in either injury or death if proper precautions are not used.

CAUTION

Caution is used for general reminders of proper safety practices or to direct the reader's attention to avoid unsafe or improper practices which may result in damage to the equipment.

TABLE OF CONTENTS

SUBJECT . . . . . SECTION

GENERAL INFORMATION . . . . . A

STRUCTURES . . . . . B

ENGINE. C

ELECTRICAL SYSTEM AND POWERTRAIN MANAGEMENT CONTROL SYSTEM . . . . . D

TRANSMISSION AND TORQUE CONVERTER. . . . . F

DRIVE AXLE, SPINDLES AND WHEELS. . . . . G

SUSPENSIONS. . . . . H

BRAKE SYSTEM. . . . . J

HYDRAULIC SYSTEM L

OPTIONS AND SPECIAL TOOLS. . . . . M

OPERATOR CAB . . . . . N

LUBRICATION AND SERVICE . . . . . P

SYSTEM SCHEMATICS . . . . . R

KOMATSU HD1500-5 TRUCK

SECTION A
GENERAL INFORMATION
INDEX

MAJOR COMPONENTS & SPECIFICATIONS A2

SAFETY AND OPERATION A3

WARNINGS AND CAUTIONS. A4

STANDARD TABLES. A5

STORAGE PROCEDURES. A7

NOTES

MAJOR COMPONENTS AND SPECIFICATIONS

Engine

The Komatsu HD1500-5 dump truck is powered by a Komatsu SDA12V160 diesel engine.

Transmission

The Torqflow transmission consists of a 3-element, single-stage, two-phase torque converter and a planetary gear, multiple disc clutch transmission which is hydraulically actuated and force-lubricated for optimum heat dissipation.

The Torqflow transmission is capable of seven forward speeds and one reverse gear. Automatic shifting is controlled by an electronic shift control system with automatic clutch modulation in all gears. A lockup system consisting of a wet, double-disc clutch, is activated in F1-F7 gears for increased fuel savings.

Final Drive Assembly

The final drive consists of a plug-in differential with planetary wheel drive.

Operator’s Cab

The operator's cab has been engineered for operator comfort and to allow for efficient and safe operation of the truck.

The cab provides for wide visibility, with an integral 4-post ROPS/FOPS structure, and an advanced analog operator environment. It includes a tinted safety-glass windshield and power-operated side windows, a deluxe interior with a fully adjustable seat with lumbar support, a fully adjustable/tilt steering wheel, controls mounted within easy reach of the operator, and an electronic display/monitoring panel to keep the operator informed of the truck's operating circuits. Audible alarms and indicator lights warn the operator of system malfunctions.

Power Steering

The truck is equipped with a full time power steering system which provides positive steering control with a minimum of effort by the operator. The system includes nitrogen-charged accumulators which automatically provide emergency power if the steering hydraulic pressure is reduced below an established minimum.

Brake System

Depressing the brake pedal, or operating the retarder lever on the RH side of the steering wheel, actuates the hydraulic front and rear service brakes. Both front and rear service brakes are oil-cooled, multiple-disc brakes. These brakes are automatically activated when the engine speed exceeds the rated revolutions of the shift position. The system includes two nitrogen-charged accumulators for quick response, and to provide emergency braking if a problem occurs in the primary braking circuit.

Retarder

The operator can manually apply both the front and rear oil-cooled, multiple-disc brakes by moving the retarder control lever which is mounted on the steering column, or by using the foot-operated brake pedal.

Suspension

Hydro-pneumatic suspension cylinders are used at each wheel to reduce shock and provide riding comfort for the operator and machine stability.

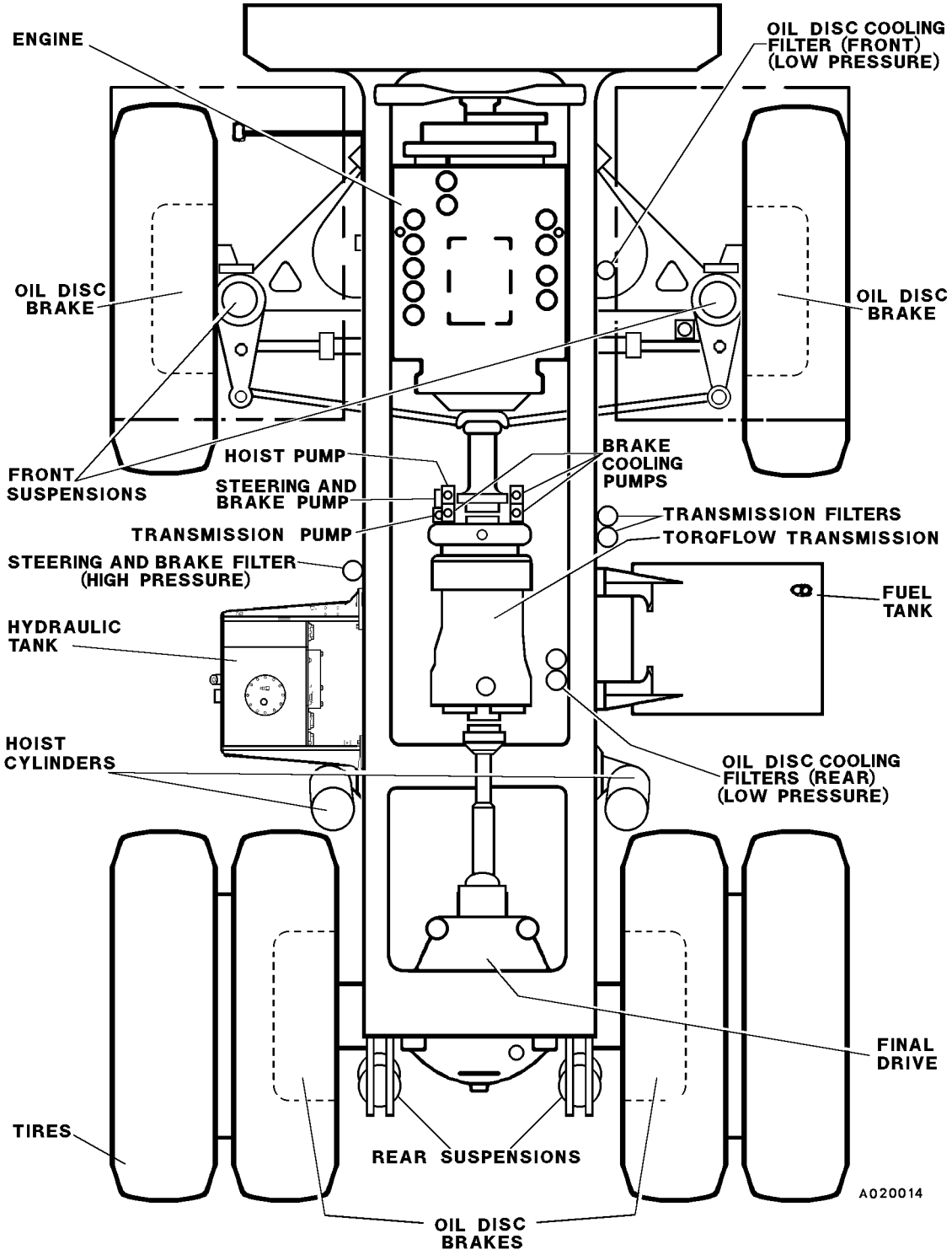

HD1500-5 MAJOR COMPONENTS

SPECIFICATIONS

Engine

Komatsu SDA12V160
Number of Cylinders 12
Operating Cycle (diesel) 4-Stroke
Rated . 1108 kW (1486 SAE Brake HP) @ 1900 rpm
Flywheel . . . 1048 kW (1406 SAE HP) @ 1900 rpm
Weight (dry) . . . . . .5813 kg (12,815 lbs)

TRANSMISSION

Automatic Electronic Shift Control with Automatic Clutch Modulation In All Gears.

Torque Converter . . . . . 3-Element, Single-stage, ... Two-phase
Lockup Clutch . . . . . Wet, Double-disc, ... Activated in F1-F7 gears.
Transmission . . . . . 7 Forward Speeds, 1 Reverse . . . . . .Planetary Gear, Multiple Disc Clutch, ... Hydraulically Actuated, Force-lubricated

Gear	kph	mph
1	11.0	6.8
2	14.6	9.1
3	19.5	12.1
4	24.5	15.2
5	32.6	20.3
6	44.2	27.5
7	58.0	36.0
Rev	10.6	6.6

Final Drive Assembly

Final Drive . . . . . Plug-in Differential . . . . . with Planetary Wheel Drive

Reduction Ratios:
Bevel Set 2.647:1
Planetary Final Drive 7.235:1
Total Reduction 19.151:1

Electric System

Batteries (series-parallel). . 4 x 12V / 220 Amp-Hour
Alternator . . . . . 24 Volt, 240 Ampere Output
Lighting . . . . . 24 Volt
Cranking Motors . . . . . Two - 24 Volt Electric

Steering

Turning Circle Diameter (SAE) . . . . . 24.4 m (80 ft)
Automatic Emergency Steering . . . .2 Accumulators

Service Capacities

	Liters	U.S Gallons
Engine (Includes Lube Oil Filters)	193	(51)
Cooling System	532	(140.6)
Fuel Tank	2120	(560.0)
Transmission And Torque Converter	153	(40.5)
Hydraulic System (Includes Retarder Cooling)	900	(238)
Differential	300	(79.0)
Final Drive (each planetary)	120	(31.7)

Hydraulic System

Hydraulic Pumps (3)
Hoist (Tandem Gear)
. . . . 805 l/min. (213 gpm) @ 18 960 kPa (2,750 psi)
Steering (Piston Pump)
. . . 221 l/min. (58.5 gpm) @ 18 960 kPa (2,750 psi)
Brakes (Tandem Gear) . . . . 1512 l/min. (400 gpm)

Hoist Control Valve . . . . . Spool Type
Positions . . . . . Raise, Hold, Float, and Lower

Hydraulic Cylinders
Hoist . . . . . 3-Stage Telescoping Piston
Steering . . . . . Twin - Double Acting Piston

Relief Valve Setting . . . . . .18 960 kPa (2,750 psi)
Filtration . . . . . In-line Replaceable Elements
Suction . . . . . .Single, Full Flow, 100 Mesh
Hoist & Steering . . . . . Dual, Full Flow, In-line . . . . . High Pressure. Beta 12 Rating = 200
Transmission . . . . . .Dual, High Pressure

Service Brakes

Actuation: . . . . . All-Hydraulic
Front . . . . . Oil-Cooled, Multiple-Disc
Rear . . . . . Oil-Cooled, Multiple-Disc
. . . . Both Act as both Service and Retarder Brakes

Retarder Brakes:
Normally Applied . . . . . Manually By Operator.
Automatically Actuated . . . . . when engine speed exceeds the rated revolutions of the shift position for the transmission.

Parking Brake: . . . . . Spring-Applied, Oil Released . . . . Dry Caliper Disc Actuates On Rear Drive Shaft

Emergency Brakes:
An emergency brake valve actuates the brakes automatically, if hydraulic pressure drops below a pre-set value. Manual operation is also possible.

Tires

Rock Service (E-3) . . . . . Tubeless
Standard 33.00 R51
Rim Size . . . . . 61x 12.95 x 12.7 cm (24 x 51 x 5 in.)
Phase II Generation™ . . . . . Separable Tire Rims

Dump Body Capacity (Standard)

Struck . . . . . 54 m^3 (71 yds^3)
Heaped @ 2:1 (SAE) . . . . . 78 m^3 (102 yds^3)

Overall Truck Dimensions

Loading Height . . . . . 4.965 m (16' 3")
Minimum Clearance Height . . . . . 5.85 m (19' 2")
Overall Length . . . . . 11.37 m (37' 4")
Maximum Width . . . . . 6.62 m (21' 9")

Weight Distribution

Based on SAE 2:1 Heaped . . . . . 78 m^3 (102 yds^3)
(w/Komatsu Engine; and . . . . . 33.00 R51 Tires)

Empty	**Kilograms**	**Pounds**
Front Axle	49 025	108,082
Rear Axle	51 437	113,399
Total	100 462	221,481

Loaded (100 Ton Payload)

	Kilograms	**Pounds**
Front Axle	82 327	181,500
Rear Axle	167 149	368,500
Total *	249 475	550,000

*Not to Exceed 249 475 kg (550,000 lbs).
Including Options, Fuel & Payload

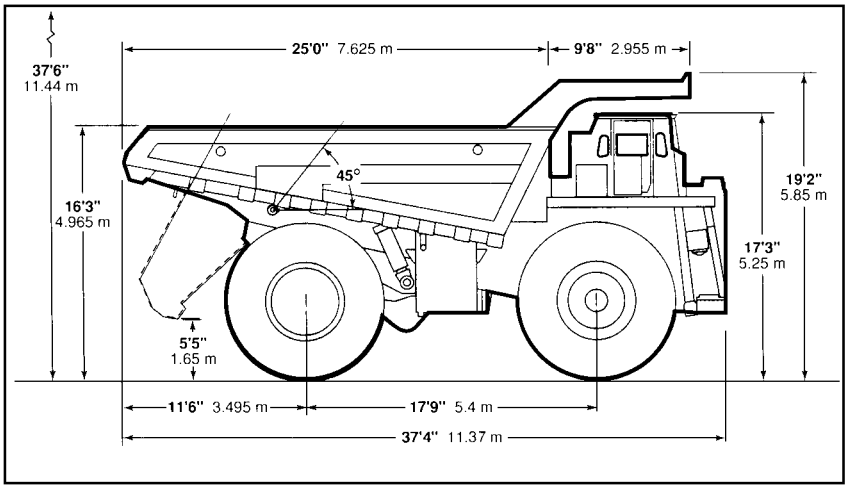

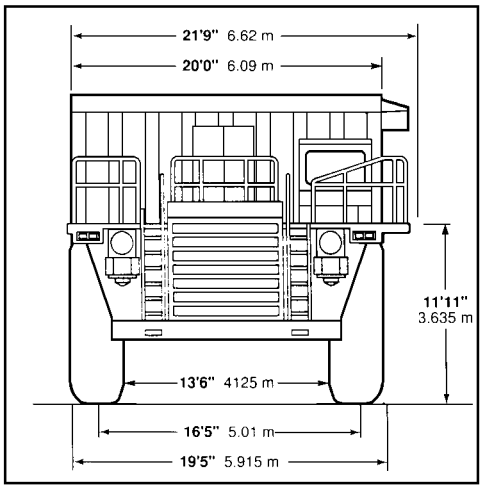

All dimensions are with **71/102 yd.**³ 54/78 m³ body.
Vertical dimensions are for standard empty vehicle — subtract **4"**/100 mm for vehicle loaded to max. GVW.
Minimum ground clearance (at max. GVW)..... **2'9"** 838 mm

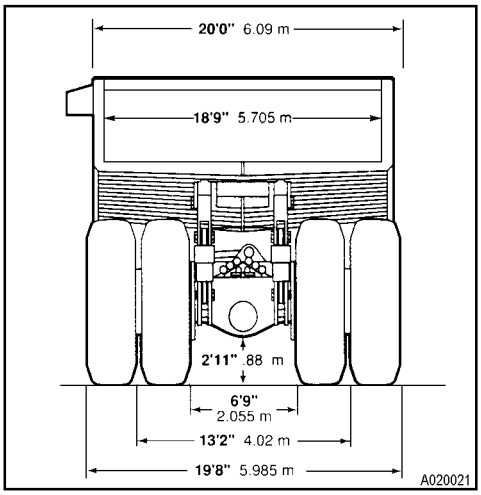

SECTION A3
SAFETY & OPERATING INSTRUCTIONS
INDEX

SAFETY A3-3
Safety Rules A3-3
Safety Features A3-3
Clothing And Personal Items A3-3
Unauthorized Modification A3-3
Leaving The Operator's Seat A3-3
Mounting And Dismounting A3-4
Fire Prevention For Fuel And Oil A3-4
Precautions With High Temperature Fluids A3-4
Asbestos Dust Hazard Prevention A3-5
Prevention Of Injury By Work Equipment A3-5
Fire Extinguisher And First Aid Kit A3-5
Precautions For ROPS A3-5
Precautions For Attachments A3-5
PRECAUTIONS DURING OPERATION A3-6
Safety Is Thinking Ahead A3-6
BEFORE STARTING THE ENGINE A3-6
Safety At The Work Site A3-6
Fire Prevention A3-6
Preparing For Operation A3-6
Ventilation In Enclosed Areas A3-6
In Operator's Cab - Before Starting The Engine A3-7
Mirrors, Windows, And Lights A3-7
OPERATING THE MACHINE A3-7
When Starting The Engine A3-7
Precautions For Starting Machine A3-7
Truck Operation - General A3-7
Traveling A3-8
Traveling In Reverse A3-8
Traveling On Slopes A3-9
Ensure Good Visibility A3-9
Operate Carefully On Snow A3-9
Avoid Damage To Dump Body A3-9
Driving Near High Voltage Cables A3-9
When Dumping A3-10
Working On Loose Ground A3-10
Loading The Body A3-10
Parking The Machine A3-10
TOWING A3-10
WORKING NEAR BATTERIES A3-11
Battery Hazard Prevention A3-11
Starting With Booster Cables A3-11
PRECAUTIONS FOR MAINTENANCE A3-12
BEFORE PERFORMING MAINTENANCE A3-12
Warning Tag A3-12
Proper Tools A3-12

Stopping The Engine Before Service A3-12
Securing The Dump Body A3-12
DURING MAINTENANCE A3-14
Personnel A3-14
Attachments A3-14
Working Under The Machine A3-14
Keep The Machine Clean A3-14
Rules To Follow When Adding Fuel Or Oil A3-14
Radiator Water Level A3-14
Use Of Lighting A3-14
Precautions With The Battery A3-15
Handling High Pressure Hoses A3-15
Precautions With High Pressure Oil A3-15
Precautions When Performing Maintenance Near High Temperature Or High Pressure A3-15
Rotating Fan And Belts A3-15
Waste Materials A3-15
TIRES A3-16
Handling Tires A3-16
Tire Maintenance A3-16
Storing Tires After Removal A3-16
WHEN REPAIRS ARE NECESSARY A3-17
ADDITIONAL JOB SITE RULES A3-18
OPERATING INSTRUCTIONS A3-19
PREPARING FOR OPERATION A3-19
Safety Is Thinking Ahead A3-19
Walk Around Inspection A3-19
ENGINE START-UP SAFETY PRACTICES A3-22
Cold Weather Starting A3-23
Jump Starting A3-23
EMERGENCY STEERING SYSTEM A3-24
Operation A3-24
Pre-Operation Testing A3-24
AFTER THE ENGINE HAS STARTED A3-25
MACHINE OPERATION SAFETY PRECAUTIONS A3-27
LOADING A3-28
HAULING A3-29
RETARDER OPERATION A3-29
PASSING A3-30
DUMPING A3-30
Raising the Dump Body A3-31
Lowering The Dump Body A3-31
SAFE PARKING PROCEDURES A3-32
SHUTTING THE ENGINE OFF A3-32
SUDDEN LOSS OF ENGINE POWER A3-32
Secondary Steering And Braking A3-32
DISABLED TRUCK DUMPING PROCEDURE A3-33
Hookup A3-33
Raising the Body A3-34
Lowering the Body A3-34
DISABLED TRUCK STEERING AND BRAKING A3-35
TOWING A3-37

SAFETY

Safety records from most organizations will show that the greatest percentage of accidents are caused by unsafe acts performed by people. The remainder are caused by unsafe mechanical or physical conditions. Report all unsafe conditions to the proper authority.

The following safety rules are provided as a guide for the operator. However, local conditions and regulations may add many more to this list.

WARNING

Read and follow all safety precautions. Failure to do so may result in serious injury or death.

Safety Rules

- Only trained and authorized personnel can operate and maintain the machine.
- Follow all safety rules, precautions and instructions when operating or performing maintenance on the machine.
- Ensure all personnel understand all hand signals that are to be used during machine travel and maintenance.

Safety Features

- Ensure all guards and covers are in their proper position. Repair damaged guards and covers. Refer to Operating Instructions - Walk-Around Inspection, later in this chapter.
- Learn the proper use of safety features such as safety locks, safety pins, and seat belts. Use these safety features properly.
- Never remove any safety features. Always keep safety features in good operating condition.
- Improper use, or failure to maintain safety features could result in serious bodily injury or death.

Clothing And Personal Items

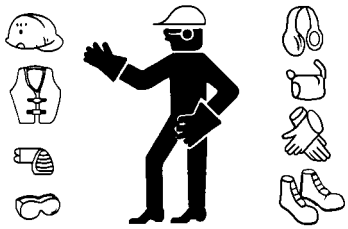

- Avoid loose clothing, jewelry, and loose long hair. Loose items can catch on controls or in moving parts and cause serious injury or death.
- Never wear oily clothes as they are flammable.
- Wear a hard hat, safety glasses, safety shoes, mask and gloves when operating or maintaining a machine. Always wear safety goggles, hard hat and heavy gloves if your job involves scattering metal chips or minute materials--particularly when driving pins with a hammer or when cleaning air cleaner elements with compressed air. Also, ensure that the work area is free from other personnel during such tasks.

Unauthorized Modification

- Any modification made to this vehicle without authorization from Komatsu America Corp. can possibly create hazards.
- Before making any modification, consult the authorized regional Komatsu America Corp. distributor. Komatsu will not be responsible for any injury or damage caused by any unauthorized modification.

Leaving The Operator’s Seat

- When preparing to leave the operator's seat, DO NOT touch any control lever that is not locked. Unexpected machine movement may result in serious bodily injury or death. To prevent accidental machine movement from occurring, always perform the following:

  Move the shift control lever to NEUTRAL and apply the parking brake.

  Lower the dump body, set the dump lever to the FLOAT position.

  Stop the engine. When exiting the machine, always lock compartments, and take the keys with you.

Mounting And Dismounting

- Never jump on or off the machine. Never climb on or off a machine while it is moving.
- When climbing on or off a machine, face the machine and use the hand-hold and steps.
- Never hold any control levers when getting on or off a machine.
- Always maintain three-point contact with the hand-holds and steps to ensure proper support and balance.
- When bringing tools into the operator's compartment, always pass them by hand or pull them up by rope.
- If there is any oil, grease, or mud on the hand-holds or steps, wipe them clean immediately. Always keep these areas clean. Repair any damage and tighten any loose bolts.
- Properly use the handrails and steps when getting on or off the machine.

Precautions With High Temperature Fluids

- Immediately after machine operation, fluids are at high temperatures and are pressurized. If a machine system is opened, there is danger of serious burns. Allow heat and pressure to dissipate before performing such tasks and follow proper procedures as outlined in the service manual.

To prevent hot coolant from spraying:

1. Stop the engine.
2. Wait for the coolant temperature to decrease.
3. Depress the pressure release button on the cap to vent cooling system pressure.
4. Turn the radiator cap slowly to release the pressure before removing.

To prevent hot engine oil spray:

1. Stop the engine.
2. Wait for the oil temperature to cool down.
3. Turn the cap slowly to release the pressure before removing the cap.

Fire Prevention For Fuel And Oil

- Fuel, oil, and antifreeze can be ignited by a flame. Fuel is extremely flammable and can be hazardous.
- Keep flames away from flammable fluids.
- Stop the engine. Never smoke when refueling.
- Tighten all fuel and oil tank caps securely.
- Refueling and oiling must be done in well ventilated areas.
- Keep oil and fuel in a designated location and DO NOT allow unauthorized persons to enter.

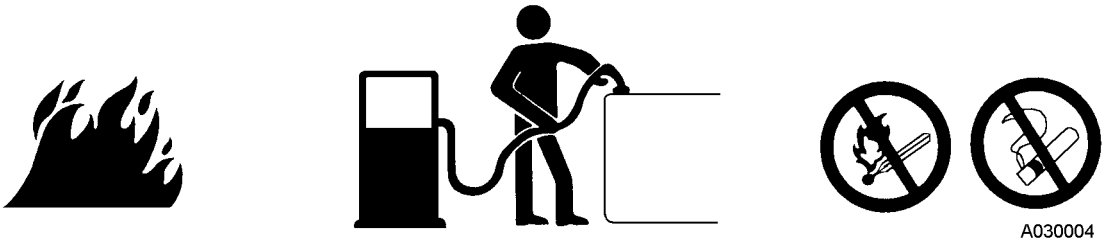

Asbestos Dust Hazard Prevention

Asbestos dust is hazardous to your health when inhaled. If you handle materials containing asbestos fibers, follow the guidelines below:

- Never use compressed air for cleaning.
- Use water for cleaning to control dust.
- Operate the machine or perform tasks with the wind to your back, whenever possible.
- Use an approved respirator when necessary.

Prevention Of Injury By Work Equipment

- Never enter or put your hand, arm or any other part of your body between movable parts such as the dump body, chassis or cylinders. If the work equipment is operated, clearances will change and may lead to serious bodily injury or death.

Fire Extinguisher And First Aid Kit

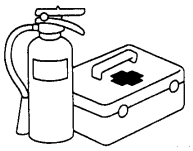

- Ensure fire extinguishers are accessible and proper usage techniques are known.
- Provide a first aid kit at the storage point.
- Know what to do in the event of a fire.
- Keep the phone numbers of persons you should contact in case of an emergency on hand.

Precautions For ROPS

- The Rollover Protection Structure (ROPS) must be properly installed for machine operation.
- The ROPS is intended to protect the operator if the machine should roll over. It is designed not only to support the load of the machine, but also to absorb the energy of the impact.
- ROPS structures installed on equipment manufactured and designed by Komatsu America Corp. fulfills all of the regulations and standards for all countries. If it is modified or repaired without authorization from Komatsu, or is damaged when the machine rolls over, the strength of the structure will be compromised and will not be able to fulfill its intended purpose. Optimum strength of the structure can only be achieved if it is repaired or modified as specified by Komatsu.
- When modifying or repairing the ROPS, always consult your nearest Komatsu distributor.
- Even with the ROPS installed, the operator must always use the seat belt when operating the machine.

Precautions For Attachments

- When installing and using optional equipment, read the instruction manual for the attachment and the information related to attachments in this manual.
- DO NOT use attachments that are not authorized by Komatsu America Corp., or the authorized regional Komatsu distributor. Use of unauthorized attachments could create a safety problem and adversely affect the proper operation and useful life of the machine.
- Any injuries, accidents, and product failures resulting from the use of unauthorized attachments will not be the responsibility of Komatsu America Corp., or the authorized regional Komatsu distributor.

PRECAUTIONS DURING OPERATION

Safety Is Thinking Ahead

Prevention is the best safety program. Prevent a potential accident by knowing the employer's safety requirements and all necessary job site regulations. In addition, know the proper use and care of all the safety equipment on the truck. Only qualified operators or technicians should attempt to operate or maintain a Komatsu machine.

Safe practices start before the operator gets to the equipment!

BEFORE STARTING THE ENGINE

Safety At The Work Site

- When walking to and from a truck, maintain a safe distance from all machines even when the operator is visible.
- Before starting the engine, thoroughly check the area for any unusual conditions that could be dangerous.
- Examine the road surface at the job site and determine the best and safest method of operation.
- Choose an area where the ground is as horizontal and firm as possible before performing the operation.
- If it is necessary to operate the machine on or near a public road, protect pedestrians and cars by designating a person for work site traffic duty or by installing fences around the work site.
- The operator must personally check the work area, the roads to be used, and existence of obstacles before starting operations.
- Always determine the travel roads at the work site. Maintain roads to ensure machine and operator safety.
- If travel through wet areas is necessary, check the depth and flow of water before crossing the shallow parts. Never drive through water which exceeds the permissible water depth.

Fire Prevention

- Thoroughly remove wood chips, leaves, paper and other flammable items accumulated in the engine compartment. Failure to do so could result in a fire.
- Check fuel, lubrication, and hydraulic systems for leaks. Repair any leaks. Clean any excess oil, fuel or other flammable fluids, and dispose of properly.
- Ensure a fire extinguisher is present and in proper working condition.
- DO NOT operate the machine near open flames.

Preparing For Operation

- Always mount and dismount while facing the truck. Never attempt to mount or dismount the truck while it is in motion. Always use handrails and ladders when mounting or dismounting the truck.
- Check the deck areas for debris, loose hardware, and tools.
- Check for people and objects that might be in the area. Remove any obstructions and wait for any personnel in the area to disperse.
- Become familiar with and use all protective equipment devices on the truck and ensure that these items (anti-skid material, grab bars, seat belts, etc.) are securely in place.

Ventilation In Enclosed Areas

- If it is necessary to start the engine within an enclosed area, provide adequate ventilation. Exhaust fumes from the engine can kill.

In Operator's Cab - Before Starting The Engine

- DO NOT leave tools or spare parts lying around or allow trash to accumulate in the cab of the truck. Keep all unauthorized reading material out of the truck cab.
- Keep the cab floor, controls, steps, and handrails free of oil, grease, snow, and excess dirt.
- Check the seat belt, buckle and hardware for damage or wear. Replace any worn or damaged parts. Always use the seat belts when operating a machine.
- Read and understand the contents of this manual pertaining to safety and operating instructions with special attention. Become thoroughly acquainted with all gauges, instruments and controls before attempting operation of the truck.
- Read and understand the warning and caution decals in the operator's cab.
- Ensure the steering wheel, horn, controls and pedals are free of any oil, grease or mud.
- Check operation of the windshield wiper, condition of wiper blades, and check the washer fluid reservoir level.
- Be familiar with all steering and brake system controls, warning devices, road speeds and loading capabilities, before operating the truck.

Mirrors, Windows, And Lights

- Remove any dirt from the surface of the windshield, cab windows, mirrors and lights. Good visibility may prevent an accident.
- Adjust rear view mirrors to a position where the operator can see best from the operator's seat.
- Replace broken windows, mirrors, or lights with new parts.
- Verify the headlights, work lights and taillights are in proper working order. Ensure that the machine is equipped with the proper work lamps needed for the operating conditions.

OPERATING THE MACHINE

When Starting The Engine

- Never start the engine if a warning tag is attached to the controls.
- When starting the engine, sound the horn as an alert.
- Start and operate the machine only while seated in the operator's seat.
- DO NOT allow unauthorized persons in the operator's compartment or any other place on the machine.

Precautions For Starting Machine

- Start the engine from the operator's seat, only.
- Never attempt to start the engine by shorting across the starter terminals. This may cause fire, or serious injury or death to anyone in machine's path.

Truck Operation - General

- Wear seat belt at all times.
- Only authorized persons are allowed to ride in the truck. Riders must be in the cab and belted in the passenger seat.
- DO NOT allow anyone to ride on the decks or steps of the truck.
- DO NOT allow anyone to get on or off the truck while it is in motion.
- DO NOT move the truck in or out of a building without a signal person present.
- Know and obey the hand signal communications between operator and spotter. Use the direction of a signal person to travel near buildings, obstacles, people, etc. Courtesy at all times is a safety precaution!
- Immediately report any hazardous conditions at the haul road, pit or dump area.

- Check for flat tires periodically during a shift. If the truck has been operating on a flat tire, DO NOT park the machine inside of a building until the tire cools. DO NOT stand in front of the rim and locking ring when inflating a tire mounted on the machine. DO NOT allow observers in the area during tiring inflation and service.

⚠ DANGER

The tire and rim assembly may explode if subjected to excessive heat. Move personnel to a remote or protected location if there is evidence of excessive heat in the wheel, brake and tire area.

If the truck must be approached to extinguish a fire, those personnel should do so only while facing the tread area of the tire (front or back), unless protected by use of large heavy equipment as a shield. Stay at least 15 m (50 ft) from the tread of the tire.

In the event of fire in the tire and wheel area (including brake fires), stay away from the truck for at least eight hours or until the tire and wheel are cool.

- Keep serviceable fire fighting equipment on hand. Report empty extinguishers for replacement or refilling.
- Always have the parking brake applied when the truck is parked and unattended. DO NOT leave the truck unattended while the engine is running.
- Park the truck a safe distance away from other vehicles as determined by the supervisor.
- Stay alert at all times! In the event of an emergency, be prepared to react quickly and avoid accidents. If an emergency arises, know where to get prompt assistance.

Traveling

- Lower the dump body and set the dump lever to the FLOAT position before traveling.
- When traveling on rough ground, travel at low speeds. When changing direction, avoid turning suddenly.
- If the engine should stop while the machine is in motion, secondary steering and braking enable the truck to be steered and stopped. A fixed amount of reserve oil provides temporary steering and braking to briefly allow machine travel to a safe area. Apply the brakes immediately and stop the machine as quickly and safely as possible (off of the haul road, if possible).

⚠ CAUTION

DO NOT move the shift lever to the N position while the truck is in motion. If the selector is shifted to N while in motion or while descending a hill the following may occur:

- ***Steering may be more difficult.***
- ***A lack of cooling oil may cause the braking system to overheat and fail.***
- ***Damage to the transmission may occur.***

The engine cannot provide braking when the transmission is not in gear.

Traveling In Reverse

Before operating the machine or work equipment, observe the following:

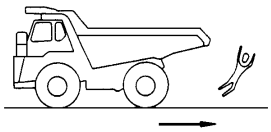

- Sound the horn to warn people in the area. For machines equipped with a back-up alarm, ensure the alarm works properly.
- Check for personnel near the machine. Be particularly careful to check behind the machine.
- When necessary, designate a person to watch the area near the truck and signal the operator. This is particularly necessary when traveling in reverse.

- When operating in areas that may be hazardous or have poor visibility, designate a person to direct work site traffic.
- DO NOT allow anyone to enter the line of travel of the machine. This rule must be strictly observed even with machines equipped with a back-up alarm or rear view mirror.

Traveling On Slopes

- Traveling on slopes could result in the machine tipping over or slipping.
- DO NOT turn the truck around on a slope. To ensure safety, drive to level ground before turning around.
- DO NOT travel up and down on grass, fallen leaves, or wet steel plates. These materials may make the machine slip on even the slightest slope. Avoid traveling sideways, and always keep travel speed low.
- When traveling downhill, use the retarder or service brake pedal to reduce truck speed. Bring the truck to a halt using the brake pedal and then apply the parking brake. Use caution when using the brake pedal. Excessive force when applying the service brakes may cause a loss of control of the truck.
- When making turns, rotate the steering wheel gradually to avoid losing control of the truck.
- If the engine should fail while on a slope, apply the service brakes and bring the truck to a halt. Move the transmission range selector to NEUTRAL and apply the parking brake.

Ensure Good Visibility

- When working in dark places, install work lamps and head lamps. Set up extra lighting in the work area if necessary.
- Discontinue operations if visibility is poor, such as in mist, snow, or rain. Wait for the weather to improve to allow the operation to be performed safely.

Operate Carefully On Snow

- When working on snowy or icy roads, there is danger that the machine may slip to the side on even the slightest slope. Always travel slowly and avoid sudden starting, turning, or stopping in these conditions.
- Be extremely careful when clearing snow. The road shoulder and other objects are buried in the snow and cannot be seen. When traveling on snow-covered roads, always install tire chains.

Avoid Damage To Dump Body

- Always use extreme caution when working in tunnels, on bridges, under electric cables, or any other place where there are height limits. The dump body must be completely lowered before driving the machine.

Driving Near High Voltage Cables

- Driving near high-voltage cables can cause electric shock. Always maintain safe distances between the machine and electric cables, as listed below.

Voltage	Minimum Safety Distance	
6.6 kv	3 m	10 ft
33.0 kv	4 m	14 ft
66.0 kv	5 m	17 ft
154.0 kv	8 m	27 ft
275.0 kv	10 m	33 ft

The following actions are effective in preventing accidents while working near high voltages:

- Wear shoes with rubber or leather soles.
- Use a signalman to give warning if the machine approaches an electric cable.
- If the work equipment should touch an electric cable, the operator must remain in the cab.
- When performing operations near high voltage cables, DO NOT allow anyone to approach the machine.
- Check with the electrical maintenance department about the voltage of nearby cables before operating.

When Dumping

- Before dumping, check that there is no person or objects behind the machine.
- Stop the machine in the desired location. Check again for persons or objects behind the machine. Give the determined signal, then slowly operate the dump body. If necessary, use blocks for the wheels or position a flagman.
- When dumping on slopes, machine stability is poor and there is danger of tip over. Always perform such operations using extreme care.
- Never travel with the dump body raised.

Working On Loose Ground

- Avoid operating the machine near cliffs, overhangs, and deep ditches. If these areas collapse, the machine could fall or tip over, resulting in serious injury or death. Remember that ground surfaces in these areas may be weakened after heavy rain or blasting.
- Freshly laid soil and the soil near ditches is loose. It can collapse under the weight or vibration of the machine. Avoid these areas whenever possible.

Loading The Body

- Check that the surrounding area is safe, stop the machine in the correct loading position, then evenly load the body.
- DO NOT leave the operator's seat during loading.

Parking The Machine

- Choose a horizontal road surface to park the machine. If the machine must be parked on a slope, always put blocks under all the wheels to prevent the machine from moving.
- When parking on public roads, provide signals, such as flags or lights, to warn pedestrians and other vehicles. Ensure the machine, flags, or lights do not obstruct the traffic.
- Before leaving the machine, fully lower the dump body, activate the parking brake, stop the engine, and lock everything. Always take the key with you.

TOWING

- Improper towing methods may lead to serious personal injury and/or damage.
- Use a towing device with ample strength for the weight of this machine.
- Never tow a machine on a slope.
- Inspect all towing apparatus for damage. DO NOT use tow rope that has kinks or is twisted.
- DO NOT stand near the towing cable during towing.
- When connecting a machine that is to be towed, DO NOT allow anyone to go between the tow machine and the machine that is being towed.
- Set the coupling of the machine being towed in a straight line with the towing portion of the tow machine, and secure it in position.

  For towing methods, refer to Operating Instructions - Towing later in this chapter.

WORKING NEAR BATTERIES

Battery Hazard Prevention

- Battery electrolyte contains sulfuric acid and can quickly burn the skin and eat holes in clothing. If acid comes in contact with any part of the body, immediately flush the area with water.
- Battery acid can cause blindness if splashed into the eyes. If acid gets into the eyes, flush them immediately with large quantities of water and see a doctor at once.
- If acid is accidentally ingested, drink a large quantity of water, milk, beaten eggs or vegetable oil. Call a doctor or poison prevention center immediately.
- When working with batteries always wear safety glasses or goggles.
- Batteries generate hydrogen gas. Hydrogen gas is very explosive and is easily ignited with a small spark of flame.
- Before working with batteries, stop the engine and turn the key switch to the OFF position.
- Avoid short-circuiting the battery terminals through accidental contact with metallic objects, such as tools across the terminals.
- When removing or installing, check which is the positive (+) terminal and negative (-) terminal.
- Tighten battery caps securely.
- Tighten the battery terminals securely. Loose terminals can generate sparks and lead to an explosion.

Starting With Booster Cables

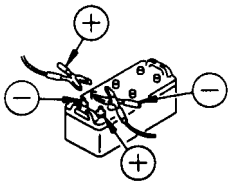

- Always wear safety glasses or goggles when starting the machine with booster cables.
- When starting from another machine, DO NOT allow the two machines to touch.
- Connect the positive (+) cable first when installing booster cables. Disconnect the ground or negative (-) cable first during removal.
- If any tool touches between the positive (+) terminal and the chassis, it will cause sparks. Always use caution when using tools near the battery.
- Connect the batteries in parallel: positive to positive and negative to negative.
- When connecting the ground cable to the frame of the machine to be started, connect it away from the battery to minimize the risk of explosion.

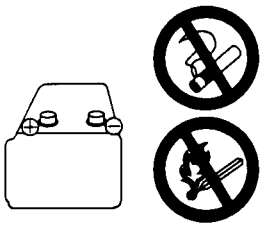

A030005

PRECAUTIONS FOR MAINTENANCE

BEFORE PERFORMING MAINTENANCE

Warning Tag

- Starting the engine or operating the controls while others are performing maintenance on the truck can lead to serious injury and/or death.

- Always attach the warning tag to the steering wheel in the operator's cab to alert others that you are working on the machine. Attach additional warning tags around the machine, if necessary.
- Tags are available from your Komatsu distributor.
- Warning tag part number (09963-03000)

Proper Tools

- Use only tools suited to the task. Using damaged, low quality, faulty, or makeshift tools can cause personal injury.

Stopping The Engine Before Service

- Before performing inspections or maintenance, stop the machine on firm, flat ground. Lower the dump body, stop the engine and apply the parking brake.
- If the engine must be operated during service, such as when cleaning the radiator, always move the transmission control lever to the NEUTRAL position and apply the parking brake. Always perform this work with two people. One person must sit in the operator's seat to stop the engine, if necessary. Never move any controls not related to the task at hand during these situations.
- When servicing the machine, DO NOT touch any moving parts. Never wear loose clothing or jewelry.
- Put wheel blocks under the wheels to prevent machine movement.
- When performing service with the dump body raised, always place the dump lever in the HOLD position. Install the body-up retention cable, securely.

Securing The Dump Body

WARNING

Any time personnel are required to perform maintenance on the vehicle with the dump body in the raised position, the body-up retention cable must be installed.

The Komatsu body-up retention cable can only be used with a Komatsu body. Non-OEM dump bodies may not accommodate the Komatsu body-up retention cable. The end user must ensure that a proper cable/sling is used.

1. To hold the dump body in the raised position, raise the body to it's maximum height. Refer to Figure 3-1.

2. Remove cable (2) from its stored position on the body and install between dump body (1) and the axle housing ear.
3. Secure the cable clevis pins with cotter pins.

WARNING

It is very important to ensure that the cable is taut before the dump body can be considered secure. Perform the following step in order to remove any slack from the body retention cable.

4. Gently move the hoist control lever to the DOWN position until the dump body moves, and then release the lever. The lever will now default to the FLOAT position where the dump body will be allowed to lower and pull the cable tight. When the cable is tight, the dump body is secure, and maintenance can be performed.
5. After maintenance work has been completed, slightly raise the dump body to remove the tension in the body retention cable. Disconnect the cable from the axle and place it in the stored position.

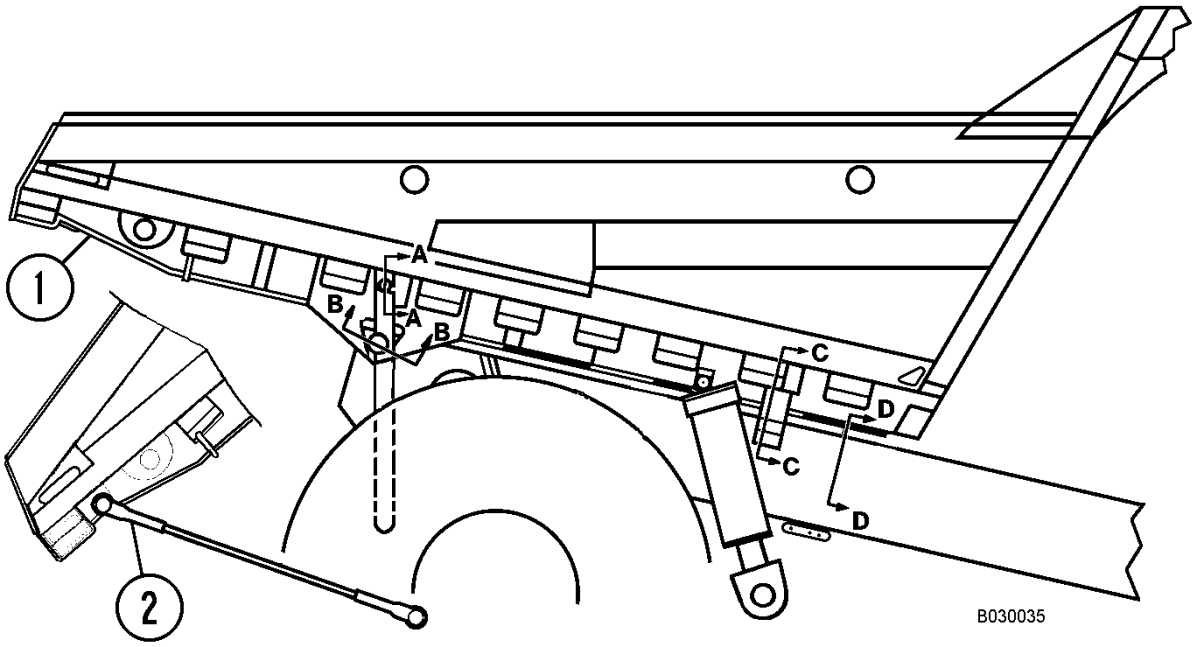

FIGURE 3-1. SECURING THE DUMP BODY

1. Dump Body 2. Body Retention Cable

DURING MAINTENANCE

Personnel

- Only authorized personnel may service and repair the machine.

Attachments

- Place attachments that have been removed from the machine in a safe place and manner to prevent them from falling.

Working Under The Machine

- Always lower all movable work equipment to the ground or to their lowest position before performing service or repairs under the machine.
- Always block the tires of the machine securely.
- Never work under the machine if the machine is poorly supported.

Keep The Machine Clean

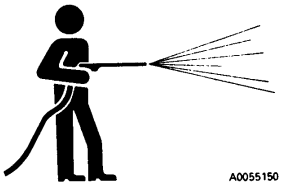

- Spilled oil or grease, scattered tools, etc. can cause you to slip or trip. Always keep the machine clean and tidy.
- If water gets into the electrical system, there is danger that the machine may move unexpectedly and/or damage to components may occur. DO NOT use water or steam to clean any sensors, connectors, or the inside of the operator's compartment.

Rules To Follow When Adding Fuel Or Oil

- Spilled fuel and oil may cause slipping. Always clean up spills, immediately. Failure to clean up fuel or oil spills may lead to fires.
- Always tighten the cap of the fuel and oil fillers securely.
- Never use fuel to wash parts.
- Always add fuel and oil in a well-ventilated area.

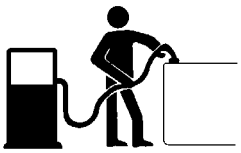

Radiator Water Level

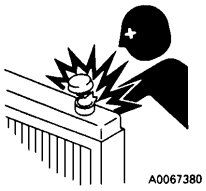

- If it is necessary to add coolant to the radiator, stop the engine, and allow the engine and radiator to cool.
- Depress the pressure release button on the cap to vent cooling system pressure.
- Slowly loosen the cap to relieve any remaining pressure during removal.

Use Of Lighting

- When checking fuel, oil, coolant, etc., always use lighting with anti-explosion specifications. If such lighting equipment is not used, there is danger of explosion.

Precautions With The Battery

- When repairing the electrical system or when performing electrical welding, remove the negative (-) terminal of the battery to stop the flow of current.

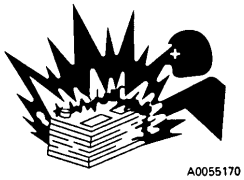

Handling High Pressure Hoses

- DO NOT bend high-pressure hoses or hit with hard objects. DO NOT use any bent or cracked piping, tubes or hoses. They may burst during use.
- Always repair any loose or broken hoses. Fuel or oil leaks may result in a fire.

Precautions With High Pressure Oil

- Work equipment circuits are always under pressure.
- DO NOT add oil, drain oil, or perform maintenance or inspections before completely releasing the internal pressure.
- Small, high pressure pin-hole leaks are extremely dangerous. The jet of high-pressure oil can pierce the skin and eyes. Always wear safety glasses and thick gloves. Use a piece of cardboard or a sheet of wood to check for oil leakage.
- If you are hit by a jet of high-pressure oil, consult a doctor immediately for medical attention.

Precautions When Performing Maintenance Near High Temperature Or High Pressure

- Immediately after stopping operation, engine coolant and operating oils are at high temperature and under high pressure. In these conditions, if the cap is removed, the oil or water drained, or the filters are replaced, it may result in burns or other injury. Wait for the temperature to cool and pressure to subside, before performing the inspection and/or maintenance as outlined in the service manual.

Rotating Fan And Belts

- Stay away from all rotating parts such as the radiator fan and fan belts. Serious bodily injury may result from direct or indirect contact with rotating parts and flying objects.

Waste Materials

- Never dump waste oil into a sewer system, river, etc.
- Always put used oil in appropriate containers. Never drain oil directly onto the ground.
- Obey appropriate laws and regulations when disposing of harmful objects such as oil, fuel, coolant, solvent, filters, batteries, etc.

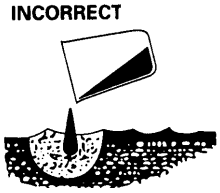

Product: KOMATSU HD1500-5 Rigid Dump Truck Service Repair Workshop Manual(CEBM010701)
Full Download: https://www.arepairmanual.com/downloads/komatsu-hd1500-5-rigid-dump-truck-service-repair-workshop-manualcebm010701/

Handling Tires

If tires are not used under the specified conditions, they may overheat and burst, or be cut and burst by sharp stones on rough road surfaces. This may lead to serious injury or damage.

To maintain tire safety, always adhere to the following conditions:

- Inflate the tires to the specified pressure. Abnormal heat is generated particularly when the inflation pressure is too low.

  To prevent injury from wheel rims during tire inflation, use one of the following:

  1. A wheel cage or other restraining device that will constrain all wheel rim components during an explosive separation of a multi-piece wheel rim, or during the sudden release of air.
  2. A stand-off inflation device which permits a person to stand outside of the potential trajectory of wheel components. Use the specified tires.
- Use the specified tires.

The tire inflation pressure and permissible speeds are general values. The actual values may differ depending on the type of tire and operating conditions. For details, please consult the tire manufacturer.

When tires become hot, a flammable gas is produced inside the tire, and may ignite. It is particularly dangerous if the tires become overheated while the tires are pressurized. If the gas generated inside the tire ignites, the internal pressure will suddenly rise, and the tire will explode, resulting in danger to personnel in the area. Explosions differ from punctures or tire bursts because the destructive force is extremely high. Therefore, the following actions are strictly prohibited when the tire is pressurized:

- Welding the rim
- Welding near the wheel or tire.
- Smoking or creating open flames

Tire Maintenance

If the proper maintenance procedures are not used, the tire may burst and cause serious injury or damage. When performing tire/wheel maintenance, consult your authorized regional Komatsu distributor, or the tire manufacturer.

Refer to the Society of Automotive Engineers (SAE), SAE J1337, “Off-Road Rim Maintenance Procedures and Service Precautions”, Section 4.2 for additional information on demounting tires and rim assemblies.

Also, refer to Section 4.4 of SAE J1337 for assembly and inflation recommendations. The U.S. Department of Labor Mine Safety and Health Administration (MSHA) addresses tire repairs in its Title 30 Code of Federal Regulations, 30 CFR 57.14104.

Storing Tires After Removal

- As a basic rule, store the tires in a warehouse that unauthorized persons cannot enter. If the tires are stored outside, erect a barrier around the tires. Install a “No Entry” sign and other warning signs that young children can understand.
- Stand the tire on level ground. Block the tire securely so that it cannot roll or fall over.
- If the tire should fall over, flee the area quickly. Tires for mining equipment are extremely heavy. Never attempt to hold or support the tire. Attempting to hold or support a tire may lead to serious injury.

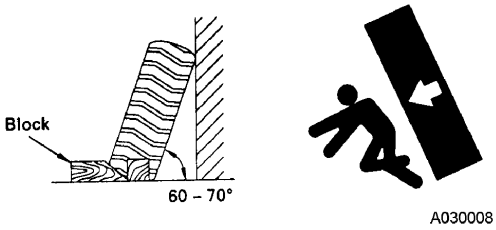

Sample of manual. Download All 1248 pages at:
https://www.arepairmanual.com/downloads/komatsu-hd1500-5-rigid-dump-truck-service-repair-workshop-manualcebm010701/