Product: KOMATSU 930E-3SE Rigid Dump Truck Service Repair Workshop Manual(CEBM015801)
Full Download: https://www.arepairmanual.com/downloads/komatsu-930e-3se-rigid-dump-truck-service-repair-workshop-manualcebm015801/

CEBM015801

Shop Manual

930E-3SE

DUMP TRUCK

SERIAL NUMBERS **A30366 & UP**

KOMATSU®

Sample of manual. Download All 1030 pages at:
https://www.arepairmanual.com/downloads/komatsu-930e-3se-rigid-dump-truck-service-repair-workshop-manualcebm015801/

Product: KOMATSU 930E-3SE Rigid Dump Truck Service Repair Workshop Manual(CEBM015801)
Full Download: https://www.arepairmanual.com/downloads/komatsu-930e-3se-rig
id-dump-truck-service-repair-workshop-manualcebm015801/

Sample of manual. Download All 1030 pages at:
https://www.arepairmanual.com/downloads/komatsu-930e-3se-rigid-dump-truck-service-repair-workshop-manualcebm015801/

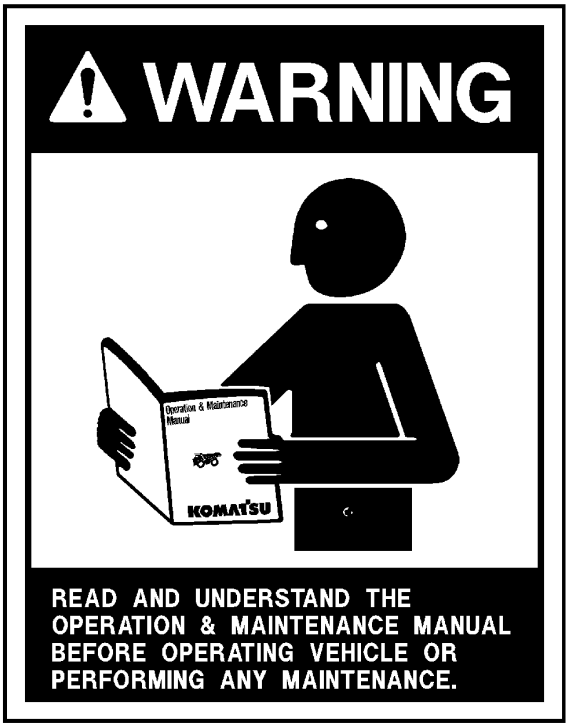

Unsafe use of this machine may cause serious injury or death. Operators and maintenance personnel must read and understand this manual before operating or maintaining this machine.

This manual should be kept in or near the machine for reference, and periodically reviewed by all personnel who will come into contact with it.

This material is proprietary to Komatsu America Corp (KAC), and is not to be reproduced, used, or disclosed except in accordance with written authorization from KAC.

It is the policy of the Company to improve products whenever it is possible and practical to do so. The Company reserves the right to make changes or add improvements at any time without incurring any obligation to install such changes on products sold previously.

Because of continuous research and development, periodic revisions may be made to this publication. Customers should contact their local Komatsu distributor for information on the latest revision.

CALIFORNIA
Proposition 65 Warning

Diesel engine exhaust, some of its constituents, and certain vehicle components contain or emit chemicals known to the State of California to cause cancer, birth defects or other reproductive harm.

CALIFORNIA
Proposition 65 Warning

Battery posts, terminals and related accessories contain lead and lead compounds, chemicals known to the State of California to cause cancer and birth defects or other reproductive harm. Wash hands after handling.

⚠WARNING

NON-OEM PARTS IN CRITICAL SYSTEMS

For safety reasons, Komatsu America Corp. strongly recommends against the use of non-OEM replacement parts in critical systems of all Komatsu equipment. Critical systems include but are not limited to steering, braking and operator safety systems.

Replacement parts manufactured and supplied by unauthorized sources may not be designed, manufactured or assembled to Komatsu's design specifications; accordingly, use of such parts may compromise the safe operation of Komatsu products and place the operator and others in danger should the part fail.

Komatsu is also aware of repair companies that will rework or modify an OEM part for reuse in critical systems. Komatsu does not generally authorize such repairs or modifications for the same reasons as noted above.

Use of non-OEM parts places full responsibility for the safe performance of the Komatsu product on the supplier and user. Komatsu will not in any case accept responsibility for the failure or performance of non-OEM parts in its products, including any damages or personal injury resulting from such use.

FOREWORD

This Shop Manual is written for use by the service technician and is designed to help the technician become fully knowledgeable of the truck and all its systems in order to keep it running and in production. All maintenance personnel should read and understand the materials in this manual before performing maintenance and/or operational checks on the truck. All safety notices, warnings and cautions should be understood and followed when accomplishing repairs on the truck.

The first section covers component descriptions, truck specifications and safe work practices, as well as other general information. The major portion of the manual pertains to disassembly, service and reassembly. Each major serviceable area is dealt with individually. For example: The disassembly, service and reassembly of the radiator group is discussed as a unit. The same is true of the engine and engine accessories, and so on through the entire mechanical detail of the truck. Disassembly should be carried only as far as necessary to accomplish needed repairs.

The illustrations used in this manual are, at times, typical of the component shown and may not necessarily depict a specific model.

This manual shows dimensioning of U.S. standard and metric (SI) units throughout and all references to "Right", "Left", "Front", or "Rear" are made with respect to the operator's normal seated position, unless specifically stated otherwise.

Standard torque requirements are shown in torque charts in the general information section and individual torques are provided in the text in bold face type, such as **100 ft.lbs. (135 N.m)** torque. All torque specifications have æ10% tolerance unless otherwise specified.

A Product Identification plate is normally located on the truck frame in front of the right side front wheel and designates the Truck Model Number, Product Identification Number (vehicle serial number), and Maximum G.V.W. (Gross Vehicle Weight) rating.

The KOMATSU Truck Model designation consists of three numbers and one letter (i.e. 930E). The three numbers represent the basic truck model. The letter "M" designates a Mechanical drive and the letter "E" designates an Electrical propulsion system.

The Product Identification Number (vehicle serial number) contains information which will identify the original manufacturing bill of material for this unit. This complete number will be necessary for proper ordering of many service parts and/or warranty consideration.

The Gross Vehicle Weight (GVW) is what determines the load on the drive train, frame, tires, and other components. The vehicle design and application guidelines are sensitive to the **total maximum Gross Vehicle Weight (GVW)** and this **means the total weight**: the Empty Vehicle Weight + the fuel & lubricants + the payload.

To determine allowable payload: Service all lubricants for proper level and fill fuel tank of empty truck (which includes all accessories, body liners, tailgates, etc.) and then weigh truck.Record this value and subtract from the GVW rating. The result is the allowable payload.

NOTE: Accumulations of mud, frozen material, etc. become a part of the GVW and reduces allowable payload. To maximize payload and to keep from exceeding the GVW rating, these accumulations should be removed as often as practical.

Exceeding the allowable payload will reduce expected life of truck components.

⚠WARNING

Unsafe use of this machine may cause serious injury or death. Operators and maintenance personnel must read this manual before operating or maintaining this machine. This manual should be kept in or near the machine for reference and periodically reviewed by all personnel who come in contact with it.

This "ALERT" symbol is used with the signal words, "DANGER", "WARNING", and "CAUTION" in this manual to alert the reader to hazards arising from improper operating and maintenance practices.

DANGER

"DANGER" identifies a specific potential hazard WHICH WILL RESULT IN EITHER INJURY OR DEATH if proper precautions are not taken.

WARNING

"WARNING" identifies a specific potential hazard WHICH MAY RESULT IN EITHER INJURY OR DEATH if proper precautions are not taken.

CAUTION

"CAUTION" is used for general reminders of proper safety practices OR to direct the reader's attention to avoid unsafe or improper practices which may result in damage to the equipment.

TABLE OF CONTENTS

SUBJECT	SECTION
GENERAL INFORMATION	A
STRUCTURES	B
ENGINE SYSTEMS	C
ELECTRIC SYSTEM (24 VDC. NON-PROPULSION)	D
ELECTRIC PROPULSION AND CONTROL	E
DRIVE AXLE, SPINDLES AND WHEELS	G
HYDRAIR® II SUSPENSIONS	H
BRAKE CIRCUIT	J
HYDRAULIC SYSTEM	L
OPTIONS AND SPECIAL TOOLS	M
OPERATOR'S CAB	N
LUBRICATION AND SERVICE	P
ALPHABETICAL INDEX	Q
SYSTEM SCHEMATICS	R

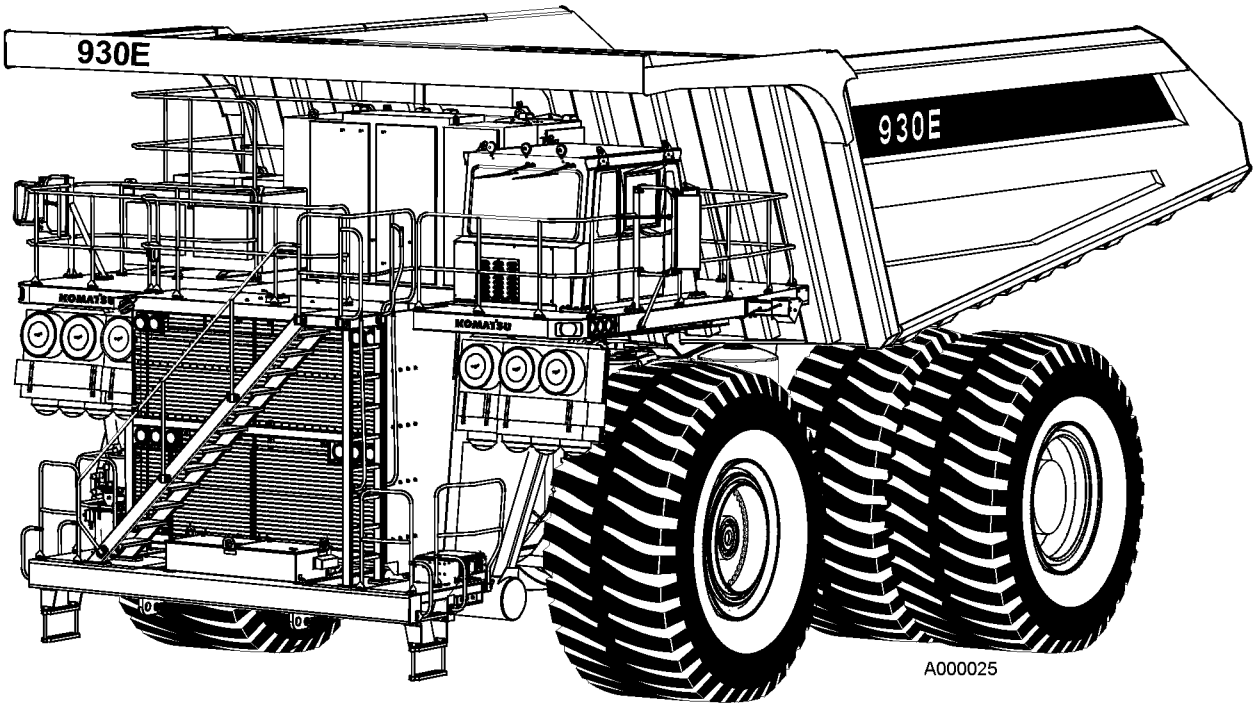

KOMATSU MODEL 930E-3SE DUMP TRUCK

SECTION A
GENERAL INFORMATION
INDEX

MAJOR COMPONENTS & SPECIFICATIONS A2

GENERAL SAFETY AND OPERATION A3

WARNINGS AND CAUTIONS. A4

STANDARD TORQUE CHARTS AND CONVERSION TABLES. A5

STORAGE PROCEDURES. A7

NOTES

TRUCK COMPONENTS AND SPECIFICATIONS

Truck And Engine

The 930E-3SE Dump Truck is an off-highway, rear dump truck with AC Electric Drive. The gross vehicle weight is 1,112,000 lbs. (504 395 kg). The engine is a Komatsu SSDA18V170 rated @ 3500 HP (2611 kW).

Alternator (GE-GTA39)

The diesel engine drives an in-line alternator at engine speed. The alternator produces AC current which is rectified to DC within the main control cabinet. The rectified DC power is converted back to AC by groups of devices called “inverters”, also within the main control cabinet. Each inverter consists of six “phase modules” under the control of a “gate drive unit” (GDU). The GDU controls the operation of each phase module.

Each phase module contains an air-cooled solid-state switch referred to as a “gate turn-off thyristor” (GTO). The GTO cycles on and off at varying frequencies to create an AC power signal from the DC supply.

The AC power signal produced by each inverter is a variable-voltage, variable-frequency signal (VVVF). Frequency and voltage are changed to suit the operating conditions.

Cooling air for the control / power group and wheel motors, as well as the alternator itself, is provided by dual fans mounted on the alternator shaft.

AC Induction Traction Motorized Wheels

The alternator output supplies electrical energy to the two wheel motors attached to the rear axle housing. The motorized wheels use three-phase AC induction motors with full-wave AC power.

The two wheel motors convert electrical energy back to mechanical energy through built-in geartrains within the wheel motor assembly. The direction of the wheel motors is controlled by a forward or reverse hand selector switch located on a console to the right side of the operator.

Suspension

HYDRAIR®II suspension cylinders located at each wheel provide a smooth and comfortable ride for the operator and dampens shock loads to the chassis during loading and operation.

Operator's Cab

The Operator's Cab has been engineered for operator comfort and to allow for efficient and safe operation of the truck. The cab provides for wide visibility, with an integral 4-post ROPS/FOPS structure, and an advanced analog operator environment. It includes a tinted safety-glass windshield, power-operated side windows, a deluxe interior with a fully adjustable seat and lumbar support, a fully adjustable tilt/telescope steering wheel, controls mounted within easy reach of the operator, and an analog instrument panel which provides the operator with all instruments and gauges which are necessary to control and/or monitor the truck's operating systems.

Power Steering

The truck is equipped with a full time power steering system which provides positive steering control with minimum operator effort. The system includes nitrogen-charged accumulators which automatically provide emergency power if the steering hydraulic pressure is reduced below an established minimum.

Dynamic Retarding

The dynamic retarding is used to slow the truck during normal operation or control speed coming down a grade. The dynamic retarding ability of the electric system is controlled by the operator through the activation of the retarder pedal (or by operating a lever on the steering column) in the operators cab and by setting the RSC (Retarder Speed Control). Dynamic retarding is automatically activated, if the truck speed goes to a preset overspeed setting.

Brake System

Service brakes at each wheel are oil-cooled multiple disc brakes applied by an all-hydraulic actuation system. Depressing the brake pedal actuates both front and rear brakes, after first applying the retarder. All wheel brakes will be applied automatically, if system pressure decreases below a preset minimum.

The parking brake is a dry disc type, mounted inboard on each rear wheel motor, and is spring-applied and hydraulically-released with wheel speed application protection (will not apply with truck moving).

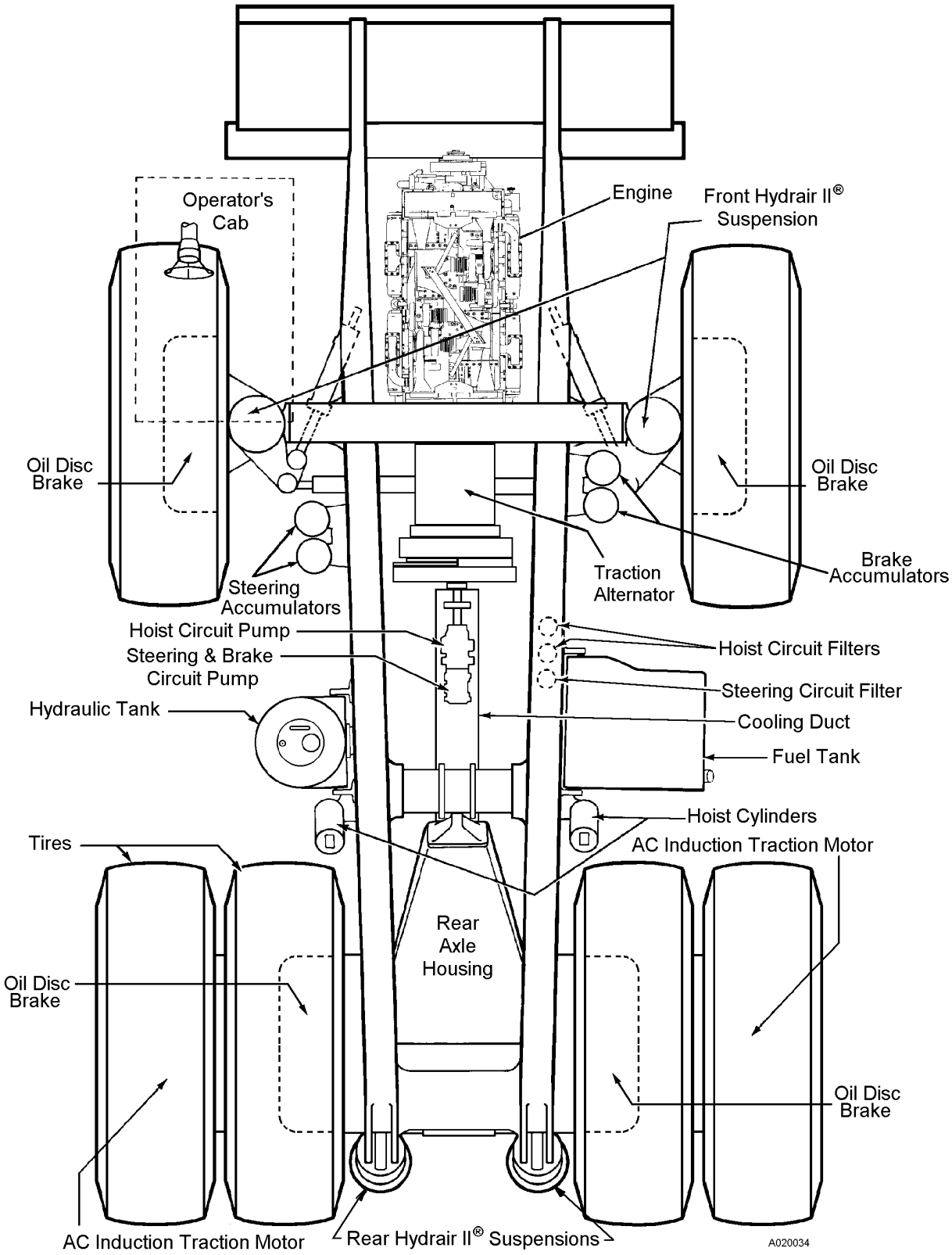

930E-3 MAJOR COMPONENTS

SPECIFICATIONS

These specifications are for the standard Komatsu 930E-3SE Truck. Customer Options may change this listing.

ENGINE

Komatsu SSDA18V170
No. of Cylinders 18
Operating Cycle 4-Stroke
Low Idle . . . . . 750 rpm
High Idle . . . . . 1910 rpm
Rated Full Load . . . . . 1900 rpm
Rated Brake HP. . . 3500HP (2611kW) @ 1900 RPM
Flywheel HP . . . . 3429HP (2558 kW) @ 1900 RPM
Weight* (Wet) . . . . . 22,266 lbs (10 000 kg)
* Weight does not include Radiator, Sub-frame, or Alternator

AC ELECTRIC DRIVE SYSTEM

(AC/DC Current)
Alternator . . . . . General Electric GTA - 39
Dual Impeller, In-Line Blower. . . . . .
. . . . . 16,000 cfm (453 m³/ min)
Motorized Wheels . . GDY106 AC Induction Traction
Standard Gear Ratio*. 32.62:1
Maximum Speed . . . . . 40 MPH (64.5 km/h)
*NOTE: Wheel motor application depends upon GVW, haul road grade and length, rolling resistance, and other parameters. Komatsu & G.E. must analyze each job condition to assure proper application.

DYNAMIC RETARDING

Electric Dynamic Retarding . . . . . Standard
Maximum Rating . . . . . 5400 HP (4026 kW)
Continuous . . . . . 3900 HP (2909 kW)
Continuously rated high-density blown grids with retard at engine idle and retard in reverse propulsion.

BATTERY ELECTRIC SYSTEM

Batteries 4 x 8D 1450CCA, 12 volt, in series/parallel,
. . . . and 2x30H 800CCA, 220-ampre-hour batteries,
. . . . . bumper mounted with disconnect switch
Alternator . . . . . 24 Volt, 260 Ampere Output
Lighting . . . . . .24 Volt
Cranking Motors (2). . . . . 24 Volt

SERVICE CAPACITIES

	U.S. Gallons	Liters
Crankcase *	90	341
* Includes Lube Oil Filters		
Cooling System	190	719
Fuel	1200	4542
Hydraulic System	350	1325
Wheel Motor Gear Box	25/Wheel	95/Wheel

HYDRAULIC SYSTEMS

Hoist & Brake Cooling Pump:. . . . . .Tandem Gear
Rated @ . . . . . 270 GPM (1022 l/min.) @ 1900 RPM
. . . . . .and 2500 psi (17 237 kPa)
Steering/Brake Pump:Pressure Compensated Piston
Rated @ . . . . . 65 GPM (246 l/min.) @ 1900 RPM
. . . . . .and 2750 psi (18 961 kPa)
Relief Pressure-Hoist . . . . . 2500 psi (17 237 kPa)
Relief Pressure-Steering . . . . 4000 psi (27 579 kPa)
Hoist Cylinders (2) . . . . . 3-Stage Hydraulic
Tank (Vertical/Cylindrical) . . . . . Non-Pressurized
Tank Capacity . . . . . 250 US Gal. (947 Liters)
Filtration . . . . . In-line replaceable elements
Suction . . . . . .Single, Full Flow, 100 Mesh
Hoist & Steering Filters . . . . . .Beta $_{12}$ Rating =200
. . . . . .Dual In-Line, High Pressure

SERVICE BRAKES

All Hydraulic Actuation . . . . . with Traction System
. . . . . Wheel Slip / Slide Control
Front and Rear Oil-Cooled Multiple Discs-each wheel
Total Friction Area / Brake . . 15,038 in² (97 025 cm²)
Maximum Apply Pressure . . . 2500 psi (17 237 kPa)

STEERING

Turning Circle (SAE). . . . . .97 ft. 7 in. (29.7 m)
Twin hydraulic cylinders with accumulator assist to provide constant rate steering.

STANDARD DUMP BODY CAPACITIES AND DIMENSIONS

Capacity,

Heaped @ 2:1 (SAE) . . . . . .276 yd^3 (211 m^3)

Struck . . . . . .224 yd^3 (171 m^3)

Width (Inside) . . . . . 26 ft. 9 in. (8.15 m)

Depth . . . . . 10 ft. 7 in. (3.2 m)

Loading Height . . . . . 23 ft. 2in. (7.06 m)

Dumping Angle . . . . . 45°

*OPTIONAL capacity dump bodies are available.

TIRES

Radial Tires (standard) 53/80 R63

Rock Service, Deep Tread . . . . . Tubeless

Rims . . . .(patented Phase I New Generation™ rims)

WEIGHT DISTRIBUTION

Empty Vehicle	**Pounds**	**(Kilograms)**
Front Axle (49.3%)	234,385	106 316
Rear Axle (50.7%)	235,324	106 742
Total EVW	469,709	213 058
Standard Komatsu body	66,936	30 362
Standard tire weight	57,600	26 127

Loaded Vehicle	**Pounds**	**(Kilograms)**
Front Axle (33.0%)	366,960	166 452
Rear Axle (67.0%)	745,040	337 948
Total *	1,112,000	504 400
Nominal Payload*	642,291	291 341

* Nominal payload is as defined within Komatsu America Corporation's payload policy documentation. Nominal payload must be adjusted should the weight of any customized body or tires fitted vary from that of the standard Komatsu body and tires as shown above. Nominal payload must also be adjusted to take into account the additional weight of any custom/optional extras fitted to the truck which are not stated within the Standard Features list of the applicable specification sheet.

OVERALL TRUCK DIMENSIONS

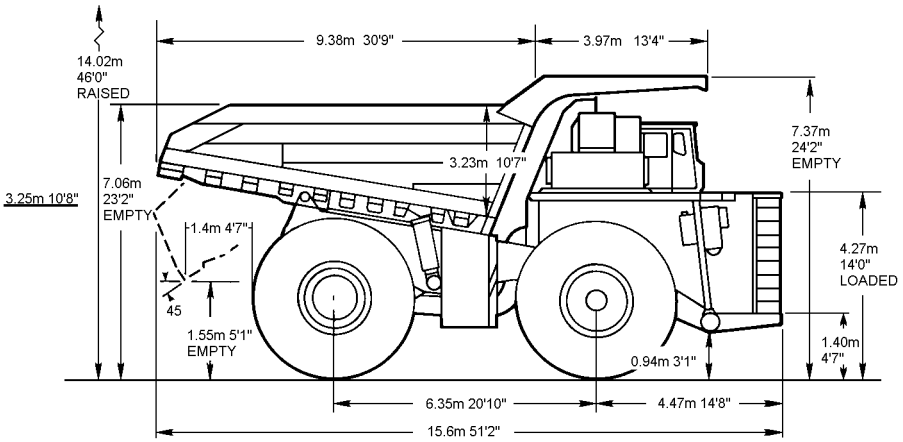

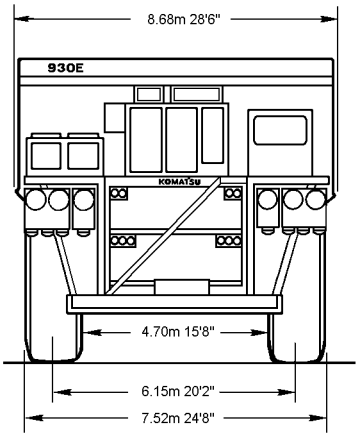

All Dimensions with 171/211m³ 224/276 yd³ Body

BODIES	Struck		2:1 Heap		Loading Height	
	M³	Yd³	M³	Yd³	M	Feet
Standard	171	224	211	276	7.06	23'2"

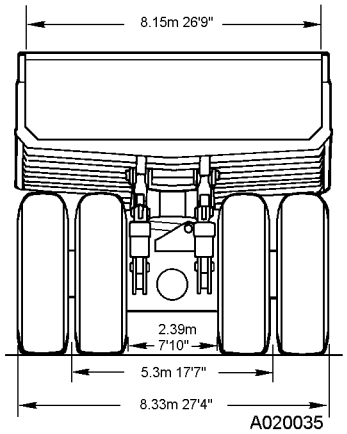

SECTION A3
GENERAL SAFETY AND OPERATING INSTRUCTIONS
INDEX

GENERAL SAFETY A3-3
- PRECAUTIONS FOR TRUCK OPERATION A3-6
- OPERATING THE MACHINE A3-7
- TOWING A3-10
- WORKING NEAR BATTERIES A3-10

PRECAUTIONS FOR MAINTENANCE A3-11
- BEFORE PERFORMING MAINTENANCE A3-11
- DURING MAINTENANCE A3-12
- TIRES A3-14

ADDITIONAL JOB SITE RULES A3-15

WHEN REPAIRS ARE NECESSARY A3-16

SPECIAL PRECAUTIONS FOR WORKING ON A 930E TRUCK A3-17

TRUCK OPERATION A3-19
- PREPARING FOR OPERATION A3-19
- WALK AROUND INSPECTION A3-19
- ENGINE START-UP SAFETY PRACTICES A3-23
- EMERGENCY STEERING SYSTEM A3-24
- AFTER STARTING THE ENGINE A3-25
- MACHINE OPERATION SAFETY PRECAUTIONS A3-25
- MACHINE OPERATION ON THE HAUL ROAD A3-25
- DYNAMIC RETARDING OPERATION A3-26
- STARTING ON A GRADE WITH A LOADED TRUCK A3-27
- PASSING A3-27
- LOADING A3-28
- DUMPING A3-28
- TOWING A3-30
- SAFE PARKING PROCEDURES A3-30
- NORMAL ENGINE SHUTDOWN PROCEDURE A3-31
- DELAYED ENGINE SHUTDOWN PROCEDURE A3-31
- SUDDEN LOSS OF ENGINE POWER A3-32

NOTES

GENERAL SAFETY

Safety records of most organizations will show that the greatest percentage of accidents are caused by unsafe acts of persons. The remainder are caused by unsafe mechanical or physical conditions. Report all unsafe conditions to the proper authority.

The following safety rules are provided as a guide for the operator. However, local conditions and regulations may add many more to this list.

⚠WARNING

Read and follow all safety precautions. Failure to do so may result in serious injury or death.

Safety Rules

- Only trained and authorized personnel can operate and maintain the machine.
- Follow all safety rules, precautions and instructions when operating or performing maintenance on the machine.
- When working with another operator or a person on work site traffic duty, ensure all personnel understand all hand signals that are to be used.

Truck Safety Features

- Ensure all guards and covers are in their proper position. Repair any damaged guards and covers. (See Walk-Around Inspection, later in this section.)
- Learn the proper use of safety features such as safety locks, safety pins, and seat belts. Always use these safety features, properly.
- Never remove any safety features. Always keep safety features in good operating condition.
- Improper use of safety features may result in serious bodily injury or death.

Clothing And Personal Items

- Avoid wearing loose clothing, jewelry, and loose long hair. They can catch on controls or in moving parts and cause serious injury or death. Additionally, never wear oily clothes as they are flammable.

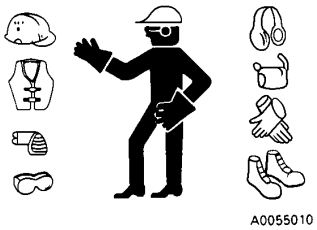

- Wear a hard hat, safety glasses, safety shoes, a mask and gloves when operating or maintaining a machine. Always wear safety goggles, a hard hat and heavy gloves if your job involves scattering metal chips or minute materials--particularly when driving pins with a hammer or when cleaning air cleaner elements with compressed air. Also, ensure that the work area is free of other personnel during such tasks.

Unauthorized Modification

- Any modification made to this vehicle without authorization from Komatsu America Corp. can possibly create hazards.
- Before making any modification, consult your authorized regional Komatsu America Corp. distributor. Komatsu will not be responsible for any injury or damage caused by any unauthorized modification.

Leaving The Operator’s Seat

- While leaving the operator's seat, DO NOT touch any controls. To prevent accidental operations from occurring, always perform the following:
- Move the shift control lever/switch to NEUTRAL and apply the parking brake.
- Lower the dump body, and move the hoist control lever to the FLOAT position.
- Stop the engine. When exiting the machine, always lock compartments, and take the keys with you to prevent entry from unauthorized persons.

Mounting And Dismounting

- Never jump on or off the machine. Never climb on or off a machine while it is moving.
- When climbing on or off a machine, face the machine and use the hand-hold and steps.
- Never hold any control levers when getting on or off a machine.
- Always maintain three-point contact with the hand-holds and steps to ensure that you support yourself.
- When bringing tools up to the operating deck, always pass them by hand or pull them up by rope.
- If there is any oil, grease, or mud on the hand-holds or steps, wipe them clean immediately. Always keep these components clean. Repair any damage and tighten any loose bolts.

- Use the handrails and steps marked by arrows in the diagram below when getting on or off the machine.

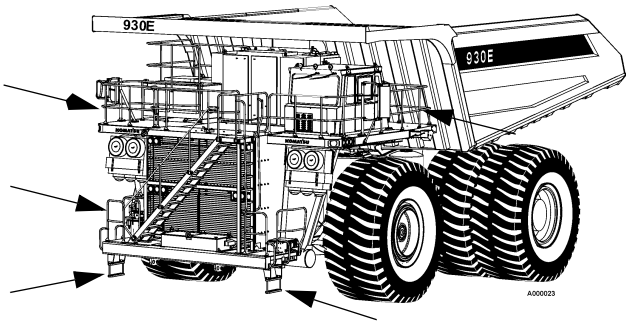

Fire Extinguishers And First Aid Kits

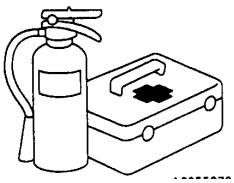

- Ensure fire extinguishers are accessible and proper usage techniques are known.
- Provide a first aid kit at the storage point.
- Know what to do in the event of a fire.
- Keep the phone numbers of persons you should contact in case of an emergency on hand.

Precautions For High Temperature Fluids

- Immediately after machine operation, engine coolant, engine oil, and hydraulic oil are at high temperatures and are pressurized. If the cap is removed, the fluids drained, the filters are replaced, etc., there is danger of serious burns. Allow heat and pressure to dissipate before performing such tasks and follow proper procedures as outlined in the service manual.
- To prevent hot coolant from spraying:
  1. Stop the engine, and wait for the coolant temperature to decrease.
  2. Depress the pressure relief button on the radiator cap.
  3. Turn the radiator cap slowly to allow pressure to dissipate.
- To prevent hot engine oil spray:
  1. Stop the engine.
  2. Wait for the oil temperature to cool down.
  3. Turn the cap slowly to allow pressure to dissipate.

Asbestos Dust Hazard Prevention

Asbestos dust is hazardous to your health when inhaled. If you handle materials containing asbestos fibers, follow the guidelines below:

- Never use compressed air for cleaning.
- Use water for cleaning and to control dust.
- Operate the machine or perform tasks with the wind to your back, whenever possible.
- Use an approved respirator, when necessary.

Fire Prevention For Fuel And Oil

- Fuel, oil, and antifreeze can be ignited by a flame. These fluids are extremely flammable and hazardous.
- Keep flames away from flammable fluids.
- Stop the engine while refueling.
- Never smoke while refueling
- Tighten all fuel and oil tank caps securely.
- Refuel and maintain oil in well ventilated areas.
- Keep oil and fuel in a designated location. DO NOT allow unauthorized persons to enter.

ROPS Precautions

- The Rollover Protection Structure (ROPS) must be properly installed for machine operation.
- The ROPS is intended to protect the operator if the machine should roll over. It is designed not only to support the load of the machine, but also to absorb the energy of the impact.
- ROPS structures installed on equipment manufactured and designed by Komatsu America Corp. fulfills all of the regulations and standards for all countries. If it is modified or repaired without authorization from Komatsu, or is damaged when the machine rolls over, the strength of the structure will be compromised and will not be able to fulfill its intended purpose. Optimum strength of the structure can only be achieved if it is repaired or modified as specified by Komatsu.
- When modifying or repairing the ROPS, always consult your nearest Komatsu distributor.
- Even with the ROPS installed, the operator must always use the seat belt when operating the machine.

Preventing Injury From Work Equipment

- Never position any part of your body between movable parts such as the dump body, chassis or cylinders. If the work equipment is operated, clearances will change and may cause serious bodily injury or death.

Precautions For Optional Attachments

- When installing and using optional equipment, read the instruction manual for the attachment and the information related to attachments in this manual.
- DO NOT use attachments that are not authorized by Komatsu America Corp., or the authorized regional Komatsu distributor. Use of unauthorized attachments could create a safety problem and adversely affect the proper operation and useful life of the machine.
- Any injuries, accidents, and product failures resulting from the use of unauthorized attachments will not be the responsibility of Komatsu America Corp., or the authorized regional Komatsu distributor.

Precautions When Starting The Machine

- Start the engine from the operator's seat, only.
- Never attempt to start the engine by shorting across the starter terminals. This may cause fire, or serious injury or death to anyone in the machine's path.

PRECAUTIONS FOR TRUCK OPERATION

Safety Is Thinking Ahead

Prevention is the best safety program. Prevent a potential accident by knowing the employer's safety requirements and all necessary job site regulations. In addition, know the proper use and care of all the safety equipment on the truck. Only qualified operators or technicians should attempt to operate or maintain a Komatsu machine.

Safe practices start before the operator gets to the equipment!

Safety At The Worksite

- When walking to and from a truck, maintain a safe distance from all machines even when the operator is visible.
- Before starting the engine, thoroughly check the area for any unusual conditions that could be dangerous.
- Examine the road surface at the job site and determine the best and safest method of operation.
- Choose an area where the ground is as horizontal and firm as possible before performing the operation.
- If you need to operate on or near a public road, protect pedestrians and cars by designating a person for work site traffic duty or by installing fences around the work site.
- The operator must personally check the work position, the roads to be used, and existence of obstacles before starting operations.
- Always determine the travel roads to be used at the work site. Travel roads must be maintained in order to ensure safe machine travel.
- If travel through wet areas is necessary, check the depth and flow of water before crossing the shallow parts. Never drive through water which exceeds the permissible water depth.

Fire Prevention

- Thoroughly remove wood chips, leaves, paper and other flammable items accumulated in the engine compartment, as they could cause a fire.
- Check fuel, lubrication, and hydraulic systems for leaks. Repair any leaks. Clean any excess oil, fuel or other flammable fluids, and dispose of properly.
- Ensure a fire extinguisher is present and in proper working condition.
- DO NOT operate the machine near open flames.

Preparing For Operation

- Always mount and dismount while facing the truck. Never attempt to mount or dismount the truck while it is in motion. Always use handrails and ladders when mounting or dismounting the truck.
- Check the deck areas for debris, loose hardware, and tools. Check for people and objects that remain on or around the truck.
- Become familiar with and use all protective equipment devices on the truck and ensure that these items (anti-skid material, grab bars, seat belts, etc.) are securely in place.

Ventilation For Enclosed Areas

- If it is necessary to start the engine in an enclosed area, provide adequate ventilation. Exhaust fumes from the engine can kill.

Mirrors, Windows, And Lights

- Remove any dirt from the surface of the windshield, cab windows, mirrors and lights. Good visibility may prevent an accident.
- Adjust the mirrors to a position where the operator can see best from the operator's seat.
- Ensure headlights, work lights and taillights are in proper working order. Ensure that the machine is equipped with the proper work lamps needed for the operating conditions.
- Replace any broken mirrors, windows or lights.

In The Operator's Cab - Before Starting The Engine

- DO NOT leave tools or spare parts lying around or allow trash to accumulate in the cab of the truck. Keep all unauthorized reading material out of the truck cab.
- Keep the cab floor, controls, steps, and handrails free of oil, grease, snow, and excess dirt.
- Check the seat belt, buckle and hardware for damage or wear. Replace any worn or damaged parts. Always use the seat belts when operating a machine.
- Read and understand the contents of the Operation & Maintenance manual. Read safety and operating instructions with special attention. Become thoroughly acquainted with all gauges, instruments and controls before attempting operation of the truck.
- Read and understand the **WARNING** and **CAUTION** decals in the operator's cab.
- Ensure the steering wheel, horn, controls and pedals are free of any oil, grease or mud.
- Check operation of the windshield wiper, condition of wiper blades, and check the washer fluid reservoir level.
- Be familiar with all steering and brake system controls, warning devices, road speeds and loading capabilities, before operating the truck.

OPERATING THE MACHINE

Starting The Engine

- Never attempt to start the machine by shorting across the starter terminals. This may cause fire, or serious injury or death to anyone in machine's path.
- Never start the engine if a warning tag has been attached to the controls.
- When starting the engine, sound the horn as an alert.
- Start and operate the machine only while seated in the operator's seat.
- DO NOT allow any unauthorized persons in the operator's compartment or any other place on the machine.

Truck Operation - General

- Wear seat belts at all times.
- Only authorized persons are allowed to ride in the truck. Passengers must be in the cab and belted in the passenger seat.
- DO NOT allow anyone to ride on the decks or on the steps of the truck.
- DO NOT allow anyone to get on or off the truck while it is in motion.
- DO NOT move the truck in or out of a building without a signal person present.
- Know and obey hand signal communications between the operator and spotter. When other machines and personnel are present, the operator should move in and out of buildings, loading areas and through traffic, under the direction of a signal person. Courtesy at all times is a safety precaution!
- Immediately report any adverse conditions on haul road, pit or dump area that may cause an operating hazard.

- Check for flat tires periodically during a shift. If the truck has been operating on a “flat”, the truck must not be parked indoors until the tire cools. If the tire must be changed, DO NOT stand in front of the rim and locking ring when inflating a tire mounted on the machine. Observers should not be permitted in the area and should be kept away from the side of such tires.

⚠ DANGER

The tire and rim assembly may explode if subjected to excessive heat. Personnel should move to a remote or protected location if there is a fire near the tire and wheel area or if the smell of burning rubber or excessively hot brakes is evident.

If the truck must be approached, such as to fight a fire, those personnel should do so only while facing the tread area of the tire (front or back), unless protected by use of large heavy equipment as a shield. Stay at least 50 ft. (15 m) from the tread of the tire.

In the event of fire in the tire and wheel area (including brake fires), stay away from the truck for at least 8 hours or until the tire and wheel are cool.

- Keep serviceable fire fighting equipment on hand. Report used extinguishers for replacement or refilling.
- Always apply the parking brake when the truck is parked and unattended. DO NOT leave the truck unattended while the engine is running.
- Park the truck a safe distance away from other vehicles as determined by the supervisor.
- Stay alert at all times! In the event of an emergency, be prepared to react quickly and avoid accidents. If an emergency arises, know where to get prompt assistance.

Traveling In The Truck

- When traveling on rough ground, travel at low speeds. When changing direction, avoid turning suddenly.
- Lower the dump body and set the dump lever to the FLOAT position before traveling.
- If the engine should stop when the machine is in motion, the emergency steering system will be activated. Apply the brakes immediately and stop the machine as quickly and safely as possible (off of the haul road, if possible).

Precautions When Traveling In Reverse

Before operating the machine or work equipment, do as follows:

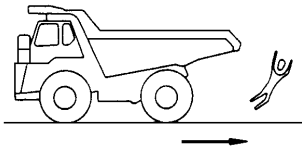

- Ensure the backup alarm works properly.
- Sound the horn to warn people in the area.
- Check for personnel near the machine. Do a thorough check behind the machine.
- When necessary, designate a person to watch the area for the truck operator. This is particularly necessary when traveling in reverse.
- When operating in hazardous areas and areas with poor visibility, designate a person to direct work site traffic.
- DO NOT allow any one to enter the line of travel of the machine. This rule must be strictly obeyed even with machines equipped with a back-up alarm or rear view mirror.

Traveling On Slopes

- Traveling on slopes could result in the machine tipping over or slipping.
- DO NOT change direction on slopes. To ensure safety, drive to level ground before turning.
- DO NOT travel up and down on grass, fallen leaves, or wet steel plates. These materials may make the machine slip on even the slightest slope. Avoid traveling sideways, and always keep travel speed low.
- When traveling downhill, use the retarder to reduce speed. DO NOT turn the steering wheel suddenly. DO NOT use the foot brake except in an emergency.
- If the engine should stop on a slope, apply the service brakes fully and stop the machine. Apply the parking brake after the machine has stopped.

Ensuring Good Visibility

- When working in dark places, install work lamps and head lamps.
- Discontinue operations if visibility is poor, such as in mist, snow, or rain. Wait for the weather to improve to allow the operation to be performed safely.

Operating On Snow

- When working on snowy or icy roads, there is danger that the machine may slip to the side on even the slightest slope. Always travel slowly and avoid sudden starting, turning, or stopping in these conditions.
- Be extremely careful when clearing snow. The road shoulder and other objects are buried in the snow and cannot be seen. When traveling on snow-covered roads, always install tire chains.

Avoid Damage To The Dump Body

- When working in tunnels, on bridges, under electric cables, or when entering an enclosed area where there are height limits, always use extreme caution. The dump body must be completely lowered before driving.

⚠WARNING

Driving with a raised dump body or raising the dump body in an enclosed area, may result in serious damage and bodily injury or death. Always drive with the dump body resting on the frame.

Driving Near High Voltage Cables

- Driving near high-voltage cables can cause electric shock. Always maintain the safe distances between the machine and the electric cable as listed below.

Voltage	Minimum Safe Distance	
6.6 kV	3 m	10 ft.
33.0 kV	4 m	14 ft.
66.0 kV	5 m	17 ft.
154.0 kV	8 m	27 ft.
275.0 kV	10 m	33 ft.

The following actions are effective in preventing accidents while working near high voltages:

- Wear shoes with rubber or leather soles.
- Use a signalman to give warning if the machine approaches an electric cable.
- If the work equipment should touch an electric cable, the operator should not leave the cab.
- When performing operations near high voltage cables, DO NOT allow anyone to approach the machine.
- Check with the electrical maintenance department about the voltage of the cables before starting operations.

When Loading The Truck

- Ensure the surrounding area is safe. If so, stop the machine in the correct loading position and evenly load the body.
- DO NOT leave the operator's seat during the loading operation.

When Dumping

- Before starting the dumping operation, check that there is no person or objects behind the machine.
- Stop the machine in the desired location. Check again for persons or objects behind the machine. Give the determined signal, then slowly operate the dump body. If necessary, use blocks for the wheels or position a flagman.
- When dumping on slopes, machine stability is poor and there is danger of tip over. Always perform such operations using extreme care.
- Never travel with the dump body raised.

Working On Loose Ground

- Avoid operating the machine near cliffs, overhangs, and deep ditches. If these areas collapse, the machine could fall or tip over and result in serious injury or death. Remember that ground surfaces in these areas may be weakened after heavy rain or blasting.
- Freshly laid soil and the soil near ditches is loose. It can collapse under the weight or vibration of the machine. Avoid these areas whenever possible.

Parking The Machine

- Choose a horizontal road surface to park the machine. If the machine has to be parked on a slope, always put blocks under all the wheels to prevent the machine from moving.
- When parking on public roads, provide fences and signs, such as flags or lights, on the machine to warn pedestrians and other vehicles. Be sure that the machine, flags, or lights DO NOT obstruct the traffic.

Before leaving the machine, lower the dump body fully, activate the parking brake, stop the engine, and lock everything. Always take the key with you.

TOWING

- Improper towing methods may lead to serious personal injury and/or damage.
- Use a towing device with ample strength for the weight of this machine.
- Never tow a machine on a slope.
- When connecting a machine to be towed, DO NOT allow anyone to go between the tow machine and the disabled machine.
- Set the coupling of the machine being towed in a straight line with the towing portion of the tow machine, and secure it in position.
- DO NOT stand next to the towing device while the truck is moving.

(For towing method, see the Operation and Maintenance Manual, Section 3, Operating Instructions - Towing.)

WORKING NEAR BATTERIES

Battery Hazard Prevention

- Battery electrolyte contains sulfuric acid and can quickly burn the skin and eat holes in clothing. If electrolyte comes in contact with skin, immediately flush the area with water.
- Battery acid can cause blindness if splashed into the eyes. If acid gets into the eyes, flush them immediately with large quantities of water and see a doctor immediately.
- If acid is accidentally ingested, drink a large quantity of water, milk, beaten eggs or vegetable oil. Call a doctor or poison prevention center immediately.
- Always wear safety glasses or goggles when working with batteries.
- Batteries generate hydrogen gas. Hydrogen gas is very explosive and is easily ignited with a small spark of flame.

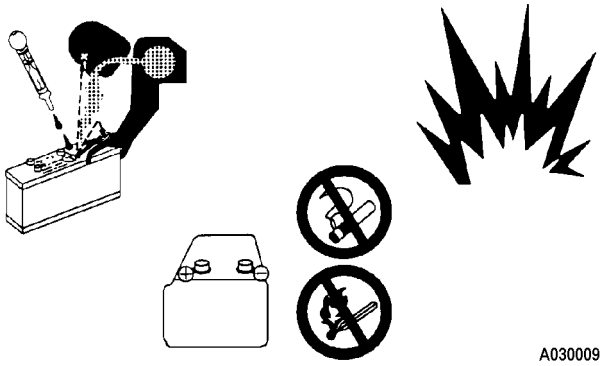

- Before working with batteries, stop the engine and turn the key switch to the OFF position.
- Avoid short-circuiting the battery terminals through accidental contact with metallic objects, such as tools, across the terminals.
- When removing or installing a battery, positively identify the positive (+) terminal and negative (-) terminal and use precautions not to short circuit the terminals.
- Tighten battery caps securely.
- Tighten battery terminals securely. Loose terminals can generate sparks and lead to an explosion.

Jump Starting With Booster Cables

- Always wear safety glasses or goggles when starting the machine with booster cables.
- While jump starting with another machine, DO NOT allow the two machines to touch.
- Be sure to connect the positive (+) cable first when installing booster cables. Disconnect the ground or negative (-) cable first during removal.

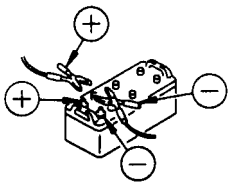

- If any tool touches between the positive (+) terminal and the chassis, it will cause sparks. Always use caution when using tools near the battery.
- Connect the batteries in parallel: positive to positive and negative to negative.
- When connecting the ground cable to the frame of the disabled machine, connect the ground as far as possible from the battery.

PRECAUTIONS FOR MAINTENANCE

BEFORE PERFORMING MAINTENANCE

Stopping The Engine Before Service

- Before performing inspections or maintenance, stop the machine on firm flat ground, lower the dump body, stop the engine and apply the parking brake. Put blocks under the wheels.
- If the engine must be operated during service, always move the shift control lever to the NEUTRAL position and apply the parking brake. Always perform this work with two people. One person must sit in the operator's seat to stop the engine if necessary. Never move any controls not related to the task at hand during these situations.
- When servicing the machine, use care not to touch any moving parts. Never wear loose clothing.
- When performing service with the dump body raised, always place the dump lever in the HOLD position, and apply the lock (if equipped). Install the body-up safety pins or cable securely.

Warning Tag

- Never start the engine or operate the controls while a person is performing maintenance. Serious injury or death may result.

- Always attach a warning tag to the control lever in the operator's cab to alert others that you are working on the machine. Attach additional warning tags around the machine, if necessary.
- These tags are available from your Komatsu distributor.
- Part No. 09963-03000

Proper Tools

- Use only tools suited to the task. Using damaged, low quality, faulty, or makeshift tools can cause personal injury.
- Extra precaution should be used when grinding, welding, and using a sledge-hammer.

Securing The Dump Body

WARNING

Any time personnel are required to perform maintenance on the vehicle with the dump body in the raised position, the body-up retention cable MUST be installed.

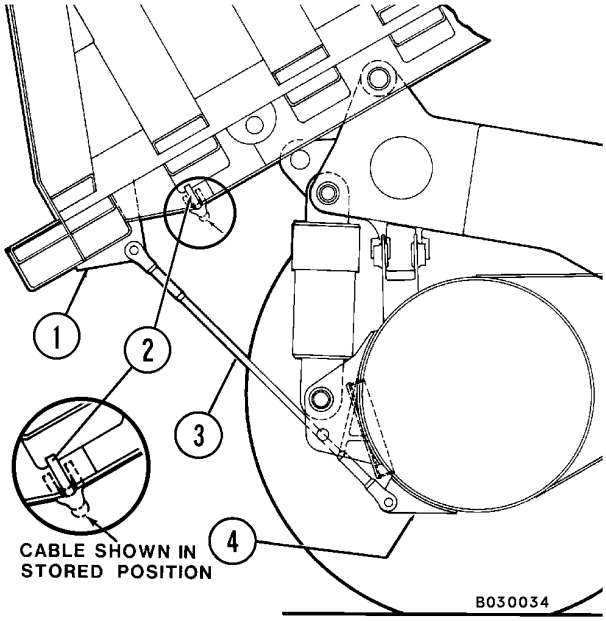

1. To hold the dump body in the up position, raise the body to it's maximum height.
2. Remove cable (3) from its stored position on the body, and install between rear body ear (1) and axle housing ear (4).
3. Secure the cable clevis pins with cotter pins.
4. Return the cable to stored position (2) after maintenance is complete.

DURING MAINTENANCE

Personnel

- Only authorized personnel can service and repair the machine.

Attachments

- Place attachments that have been removed from the machine in a safe place and manner to prevent them from falling.

Working Under The Machine

- Always lower all movable work equipment to the ground or to their lowest position before performing service or repairs under the machine.
- Always block the tires of the machine securely.
- Never work under the machine if the machine is poorly supported.

Keeping The Machine Clean

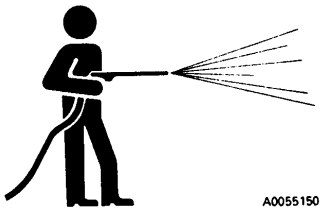

- Spilled oil or grease, scattered tools, etc. can cause you to slip or trip. Always keep your machine clean and tidy.
- If water gets into the electrical system, there is danger that the machine may move unexpectedly and/or damage to components may occur. DO NOT use water or steam to clean any sensors, connectors, or the inside of the operator's compartment.
- Use extreme care when washing the electrical control cabinet. DO NOT allow water to enter the control cabinet around the doors or vents. DO NOT allow any water to enter the cooling air inlet duct above the electrical control cabinet. If water enters the control cabinet (through any opening or crevice) major damage to the electrical components may occur.
- Never spray water into the rear wheel electric motor covers. Damage to the wheel motor armatures may occur.
- DO NOT spray water into the retarding grids. Excess water in the retarding grids can cause a ground fault, which will prevent propulsion.

Rules To Follow When Adding Fuel Or Oil

- Spilled fuel and oil may cause slipping. Always clean up spills, immediately.
- Always tighten the cap of the fuel and oil fillers securely.
- Never use fuel for washing any parts.
- Always add fuel and oil in a well-ventilated area.

Radiator Coolant Level

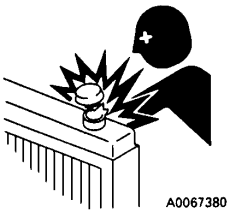

- If it is necessary to add coolant to the radiator, stop the engine, and allow the engine and radiator to cool down before adding the coolant.
- Depress the pressure relief button on the radiator cap.
- Slowly loosen the cap to relieve pressure during removal.

Use Of Lighting

- When checking fuel, oil, coolant, or battery electrolyte, always use lighting with anti-explosion specifications. If lighting without this protection is used, there is a danger of explosion.

Precautions With The Battery

- When repairing the electrical system or when performing electrical welding, remove the negative (-) terminal of the battery to stop the flow of current.

Handling High Pressure Hoses

- DO NOT bend high-pressure hoses or hit them with hard objects. DO NOT use any bent or cracked piping, tubes or hoses. They may burst during use.
- Always repair any loose or broken hoses. Fuel and/or oil leaks may result in a fire.

Precautions With High Pressure Oil

- Always remember that work equipment circuits are always under pressure.
- DO NOT add oil, drain oil, or perform maintenance or inspections before completely releasing the internal pressure.

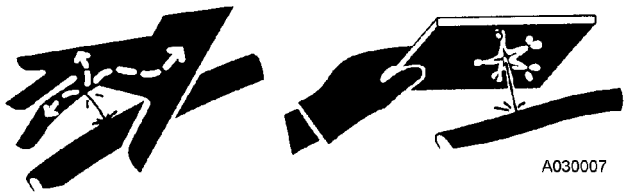

- Small, high pressure pin-hole leaks are extremely dangerous. The jet of high-pressure oil can pierce the skin and eyes. Always wear safety glasses and thick gloves. Use a piece of cardboard or a sheet of wood to check for oil leakage.
- If you are hit by a jet of high-pressure oil, consult a doctor immediately for medical attention.

Maintenance Near High Temperatures And High Pressures

- Immediately after stopping operation, the engine coolant and operating oils are at high temperature and under high pressure. In these conditions, opening the system or replacing filters may result in burns or other injury. Wait for the temperature to cool and pressure to subside before performing the inspection and/or maintenance as outlined in the service manual.

Rotating Fan And Belts

- Keep a safe distance from rotating parts such as the radiator fan and fan belts.
- Serious bodily injury may result from direct or indirect contact with rotating parts and flying objects.

Waste Materials

- Never dump oil or other harmful fluids into a sewer system, rivers, etc.
- Obey appropriate laws and regulations when disposing of harmful objects such as oil, fuel, coolant, solvent, filters, batteries, and others.

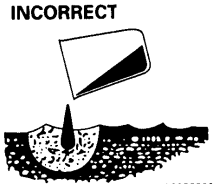

- Always put fluids drained from your machine in appropriate containers. Never drain fluids directly onto the ground.

TIRES

Handling Tires

If tires are not used under the specified conditions, they may overheat and burst, or be cut and burst by sharp stones on rough road surfaces. This may lead to serious injury or damage.

To maintain tire safety, always adhere to the following conditions:

- Inflate the tires to the specified pressure. Abnormal heat is generated particularly when the inflation pressure is too low.
- Use the specified tires.

The tire inflation pressure and permissible speeds are general values. The actual values may differ depending on the type of tire and the condition under which they are used. For details, please consult the tire manufacturer.

When tires become hot, a flammable gas is produced, and may ignite. It is particularly dangerous if the tires become overheated while the tires are pressurized. If the gas generated inside the tire ignites, the internal pressure will suddenly rise, and the tire will explode, resulting in danger to personnel in the area. Explosions differ from punctures or tire bursts because the destructive force is extremely large. Therefore, the following operations are strictly prohibited when the tire is pressurized:

- Welding the rim
- Welding near the wheel or tire.
- Smoking or creating open flames

If the proper procedure for performing maintenance or replacement of the wheel or tire is not used, the wheel or tire may burst and cause serious injury or damage. When performing such maintenance, consult your authorized regional Komatsu distributor, or the tire manufacturer.

Storing Tires After Removal

- As a basic rule, store the tires in a warehouse in which unauthorized persons cannot enter. If the tires are stored outside, always erect a fence around the tires and put up “No Entry” and other warning signs that even young children can understand.
- Stand the tire on level ground, and block it securely so that it cannot roll or fall over.
- If the tire should fall, flee the area as quickly as possible. The tires for mining equipment are extremely heavy. Never attempt to hold a tire upright when the tire is falling. This may lead to serious injury or death.

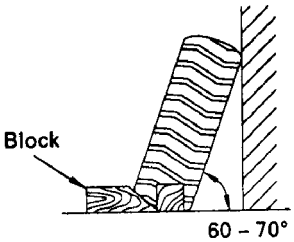

A030008

ADDITIONAL JOB SITE RULES

Use this space to add any additional job site rules not covered in any of the previous discussions.

Product: KOMATSU 930E-3SE Rigid Dump Truck Service Repair Workshop Manual(CEBM015801)
Full Download: https://www.arepairmanual.com/downloads/komatsu-930e-3se-rigid-dump-truck-service-repair-workshop-manualcebm015801/

WHEN REPAIRS ARE NECESSARY

1. Only qualified maintenance personnel who understand the systems being repaired should attempt repairs.
2. Many components on the Komatsu truck are large and heavy. Ensure that lifting equipment - hoists, slings, chains, lifting eyes - are of adequate capacity to handle the lift.
3. DO NOT stand under a suspended load. DO NOT work under raised body unless body safety cables, props, or pins are in place to hold the body in up position.
4. DO NOT repair or service the truck while the engine is running, except when adjustments can only be made under such conditions. Keep a safe distance from moving parts.
5. When servicing any air conditioning system with refrigerant, wear a face shield and cold resistant gloves for protection against freezing. Be certain to follow all current regulations for handling and recycling refrigerants.
6. Follow package directions carefully when using cleaning solvents.
7. If an auxiliary battery assist is needed, first use one cable to connect the 24V positive (+) post of the disabled truck batteries to the 24V positive (+) post of the auxiliary assist. Use second cable to connect the 24V negative (-) post of the auxiliary assist battery to a frame ground (-) on the disabled truck away from the battery.
8. Always disconnect the positive and negative battery cables of the vehicle before doing any welding on the unit. Failure to do so may seriously damage the battery and electrical equipment. Disconnect the battery charging alternator lead wire and isolate electronic control components before making welding repairs. (It is not necessary to disconnect or remove any control circuit cards on electric drive dump trucks or any of the Alarm Indicating Device (AID) circuit control cards.)

   Always fasten the welding machine ground (-) lead to the piece being welded; the grounding clamp must be attached as near as possible to the weld area. Never allow welding current to pass through ball bearings, roller bearings, suspensions, or hydraulic cylinders. Always avoid laying welding cables over or near the vehicle electrical harnesses. Welding voltage could be induced into the electrical harness and cause damage to components.
9. If the truck is to be towed for any reason, use a rigid tow bar. Check the truck cab for decals for special towing precautions. (Also refer to the Operation and Maintenance Manual, Operating Instructions - Towing.)
10. Drain, clean and ventilate fuel tanks and/or hydraulic tanks before making any welding repairs.

⚠WARNING

Any operating fluid, such as hydraulic oil or brake fluid escaping under pressure, can have sufficient force to enter a person's body by penetrating the skin. Serious injury and possibly death may result if proper medical treatment by a physician familiar with this injury is not received immediately.

11. Relieve pressure in lines or hoses before making any disconnects.
12. After adjustments or repairs, replace all shields, screens and clamps.
13. Working near tires can be dangerous. Use extreme caution when working around tires.

⚠WARNING

DO NOT stand in front of a rim and locking ring when inflating a tire mounted on the machine. Observers must not be permitted in the area.

DO NOT weld or apply heat to the rim assembly with the tire mounted on the rim. Resulting gases inside the tire may ignite, causing explosion of the tire and rim.

14. Only a qualified operator or experienced maintenance personnel who are also qualified in operation can move the truck under its own power in the repair facility or during road testing after repairs are complete.

Sample of manual. Download All 1030 pages at:
https://www.arepairmanual.com/downloads/komatsu-930e-3se-rigid-dump-truck-service-repair-workshop-manualcebm015801/