RETURN
4 series Parts Manual
Full Download: https://www.arepairmanual.com/downloads/jcb-4-series-parts-manual/

BUCKETS & ATTACHMENTS A

EXCAVATOR & FRAMEWORK B

ELECTRICAL EQUIPMENT C

HYDRAULICS E

TRANSMISSION FITTINGS (FORD) FO

* TRANSMISSION

* BRAKES

* ENGINE

* Refer to the Parts Catalogue No. PCA110

Sample of manual. Download All 151 pages at:
https://www.arepairmanual.com/downloads/jcb-4-series-parts-manual/

Product: JCB 4 series Parts Manual
Full Download: https://www.arepairmanual.com/downloads/jcb-4-series-parts-manual/

B-7C CAB

ISSUE 4

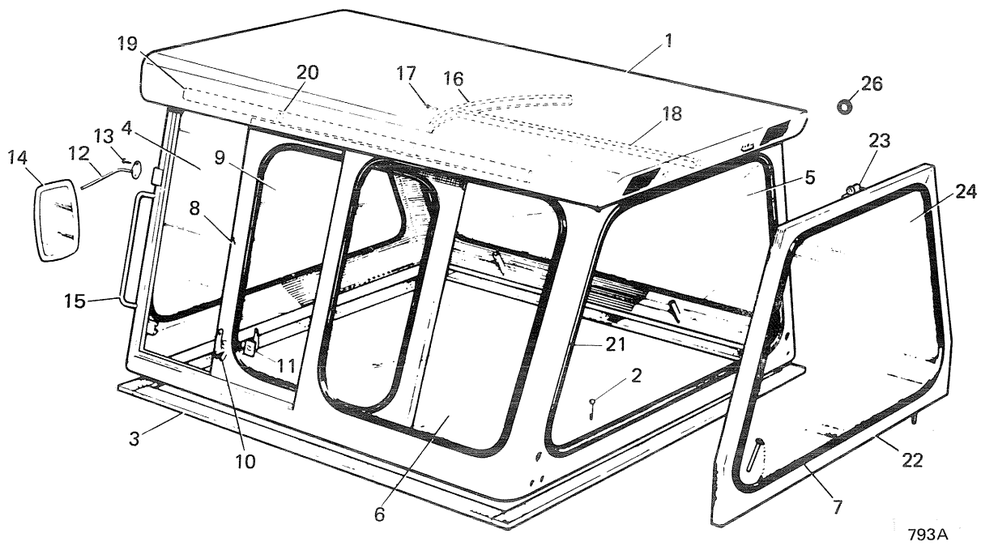

Item	Part No.	m/c No.	Description	Remarks	Qty. m/c	Qty. Assy.
	108/01400 108/50600	Superseded	*Cab	....	1	
1	108/01401 108/50601	Superseded	*:Cab Shell	....		1
2	1305/3426	....	:Bolt	....		6
	1340/0403	....	:Nut	....		6
	1412/0005	....	:Washer	....		6
3	G76/0/2 824/50010	No./Con. ..... To M49740	*:Sealing Strip 2½in. x ½in.	....		As Reqd.
	G76/4 G76/6 824/50013	Superseded No./Con.				
	824/50015	....	*:Sealing Strip 1in. x ½in.	....		As Reqd.
4	827/20010	....	:Windscreen	....		1
	827/30010	....	:Windscreen	Sundym Green		1
	827/40010	....	:Windscreen	Spectrafloat Bronze		1
5	827/20011	....	:Side Window R.H.	....		1
	827/30011	....	:Side Window R.H.	Sundym Green		1
	827/40011	....	:Side Window R.H.	Spectrafloat Bronze		1
6	827/20012	....	:Side Window L.H	....		1
	827/30012	....	:Side Window L.H.	Sundym Green		1
	827/40012	....	:Side Window L.H.	Spectrafloat Bronze		1
7	G45/7/4 824/00005	Superseded	:Glazing Rubber	....		1
	824/00004	....	:Glazing Rubber	Spectrafloat Bronze		1
	824/00007	....	: Filler Strip	....		1
8	108/01600 108/51100	To M54698	:Door	....		1
9	827/20014	....	:Door Window	....		1
	827/30014	....	:Door Window	Sundym Green		1
	827/40014	....	:Door Window	Spectrafloat Bronze		1
10	200/10501 108/51102	To M54698	*:Handle	....		1
	106/65906 108/51104	To M54698	*:Key	FS880 .... FS876		1

Sample of manual. Download All 151 pages at:
https://www.arepairmanual.com/downloads/jcb-4-series-parts-manual/

B-7C CAB

ISSUE 4

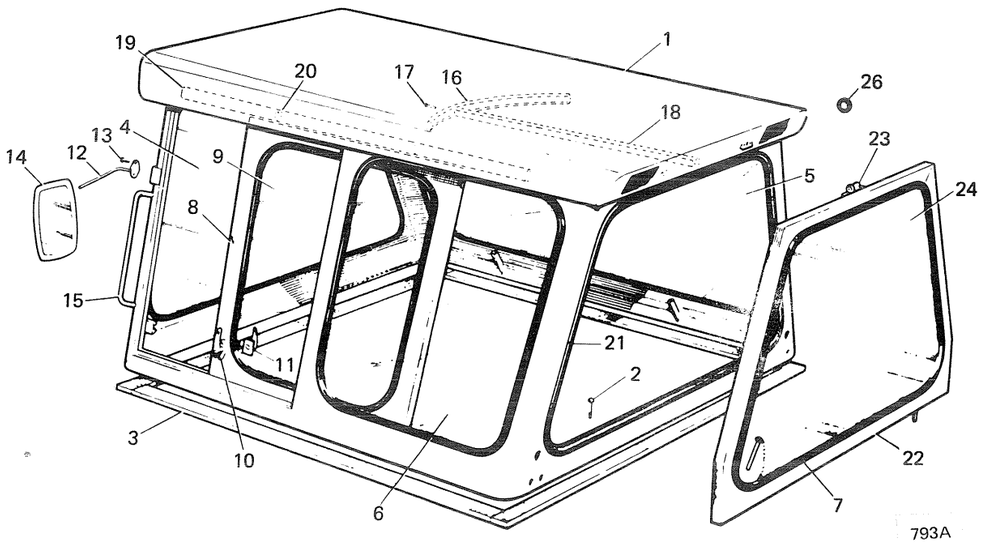

Item	Part No.	m/c No.	Description	Remarks	Qty. m/c	Qty. Assy.
	103/20910 108/51500	To M54698	*:Lock	....		1
11	103/20912 108/51101	To M54698	*:Handle	....		1
12	102/74400	....	:Bracket	....		1
13	1305/0004	....	:Bolt	....		2
	1340/0003	....	:Nut	....		2
14	102/74300	....	:Mirror	....		1
15	N.S.P.	....	:Grab Handle	....		1
16	103/20918	....	:Guide	....		1
	G96/9	....	:Screw	....		3
17	1305/0004	....	:Bolt	....		3
	1340/0003	....	:Nut	....		3
18	103/20917	....	:Guide	....		1
19	103/20903 108/51300	To M54698	*:Door Guide	....		1
20	103/41002	....	:Roller	....		2
21	G45/6	....	:Weather Strip	....		As Reqd.
22	108/01500	....	:Rear Door	....		1
23	103/26902	....	:Runner	....		1
24	827/20013	....	:Rear Window	....		1
	827/30013	....	:Rear Window	Sundym Green		1
	827/40013	....	:Rear Window	Spectrafloat Bronze		1
26	102/20210	....	:Grommet	....		9
	102/73401	....	Licence Holder	....		1
	108/01407	....	Metalastic Coupling	....		4
	200/09905 202/39313	No./Con.	*Coat Hook	....		1
	108/01419	....	Bracket	....		1
	1305/0004	....	Bolt	....		2
	1411/0001	....	Nut	....		2
	108/50602	....	*Roof Lining—Front	....		1

B-7C CAB

ISSUE 2

Item	Part No.	m/c No.	Description	Remarks	Qty. m/c	Qty. Assy.
	108/50603	.....	..... *Roof Lining—Rear	....		1
	106/65905	.....	..... *Strip	....		As Reqd.
	826/00031	.....	..... *Nut	....		1
	826/00032	.....	..... *Screw	....		1
	826/00022	.....	..... *'U' Bolt	....		1
	826/00024	.....	..... *Screw	....		1
	826/00023	.....	..... *Screw	....		1

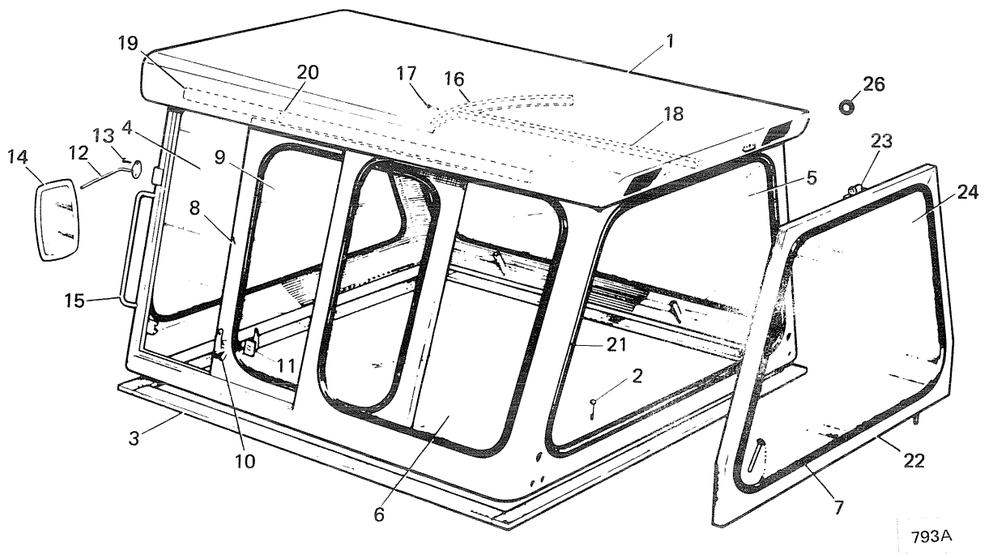

Section B

Page B–8A to B–16B

B-8A STABILIZER

ISSUE 2

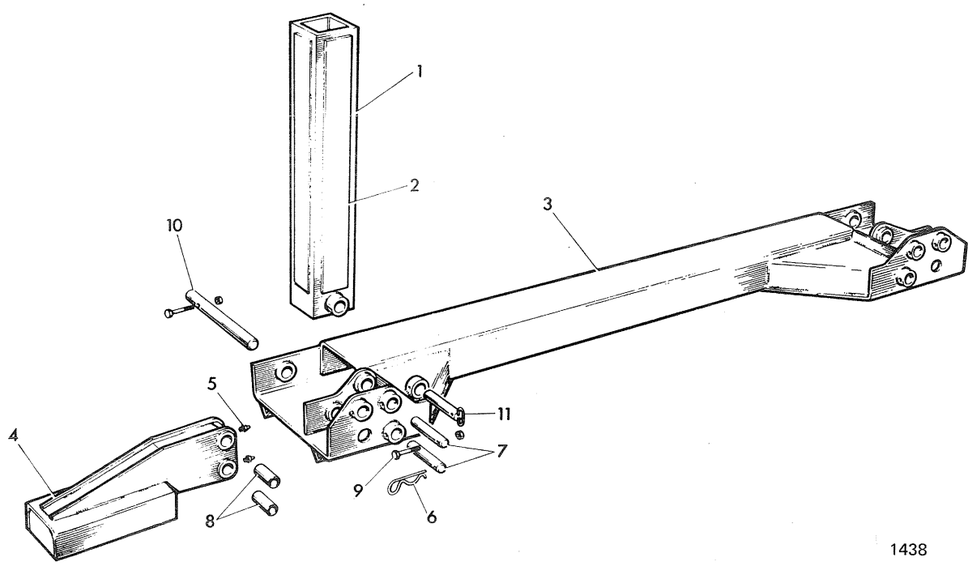

Key No.	Part No.	Up to m/c No.	Description	Remarks	No. off
1	109/00800		Sliding Leg		2
2	103/24301		Rubbing Strip		4
	109/03400		Level Link	Comprises items 3 to 10	1
3	109/03500		Level Link		1
4	109/03800		Outrigger		2
5	G15/4		Grease Nipple		4
6	200/43301		Hair Pin Clip		4
7	1019/2028		Pin		4
8	1208/0021		Spring Bush		4
9	1305/3226		Bolt		4
	1340/0203		Nut		4
10	1019/3846		Pin		2
11	109/04200		Pin		2

B-9A KINGPOST

ISSUE 1

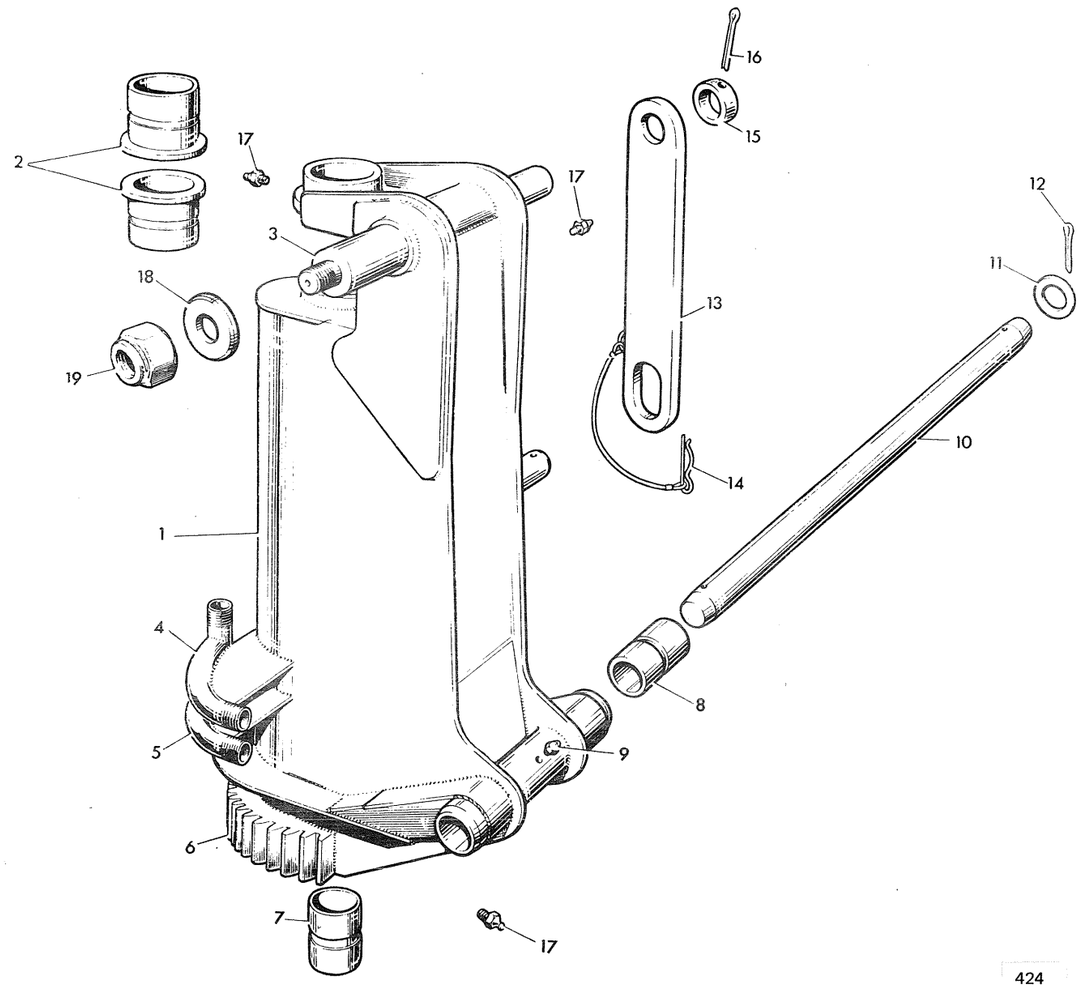

Key No.	Part No.	Up to m/c No.	Description	Remarks	No. off
1	104/97000		KINGPOST	Includes Items 1 to 8	1
2	808/00015		Bronze Bush		2
3	104/97009		Pivot Pin	Welded to Kingpost	1
4	104/97400		Feed Pipe	Welded to Kingpost	2
5	104/97500		Feed Pipe	Welded to Kingpost	2
6	104/97100		Gear	Welded to Kingpost. Includes Item 7	1
7	808/00016		Bronze Bush		1
8	808/00014		Bronze Bush		2
9	G15/1/1		Grease Nipple		1
10	104/96902		Pivot Pin		1
11	G14/29/1		Washer		2
12	G3/13/2		Split Pin		2
13	104/98100		Jury Strut		1
14	EM4/110/3		Hair Pin Clip		1
15	1095/0154		Collar		1
16	G3/11/2		Split Pin		1
17	G15/0/1		Grease Nipple		3
18	104/96901		Washer		1
19	1350/1103 1340/1103	C16028 N	Nut	Ram to Kingpost	1

B-9B KINGPOST

ISSUE 4

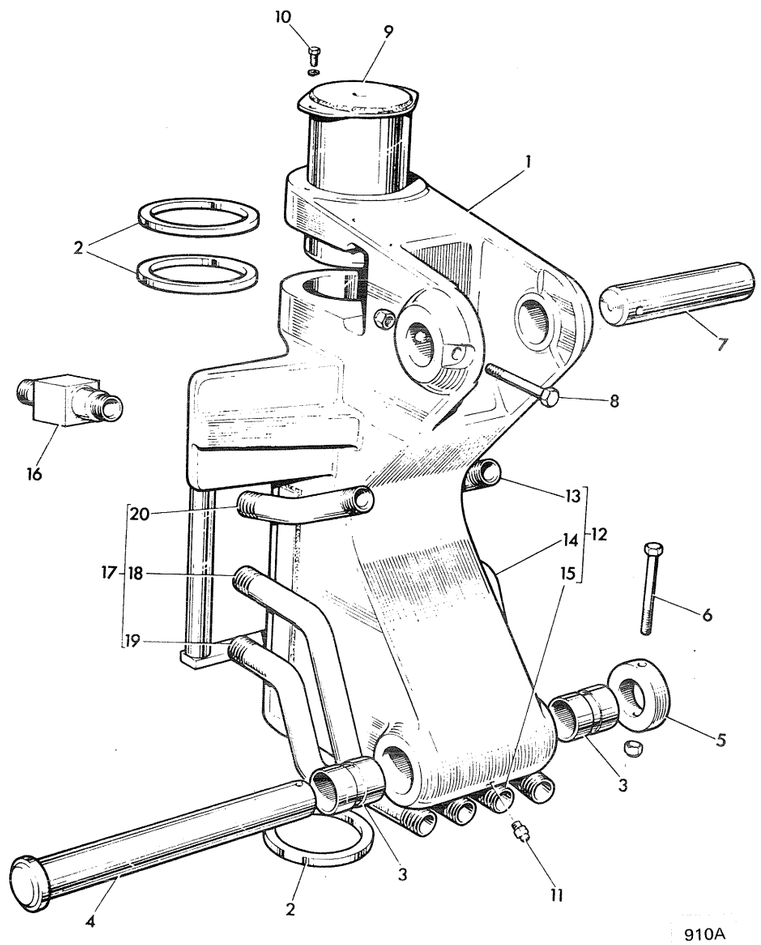

Item	Part No.	m/c No.	Description	Remarks	Qty.
1	990/05900	....	Kingpost	Includes item 3	1
2	103/25507 808/00064	Superseded	*Thrust Washer	....	3
3	808/00022	....	Bush	....	2
4	911/03100	....	Pivot Pin	....	1
5	1089/6002	....	Collar	....	1
6	1305/3224	....	Bolt	....	1
	1340/0203	....	Nut	....	1
7	102/2019	....	Pivot Pin	....	1
8	1305/3432	....	Bolt	....	1
	1340/0403	....	Nut	....	1
9	109/10300	....	Pivot Shaft	....	1
10	1305/0004	....	Bolt	....	2
	1416/0004	....	Washer	....	2
11	G15/1/1 1450/0001	No./Con.	*Grease Nipple	....	1
12	109/10600	....	Feed Pipe Assembly L.H.	Welded to Kingpost	1
13	663/00131 663/00135	To M50901	Feed Pipe—Top	.....	1
14	663/00114 663/00136	To M50901	Feed Pipe—Centre	.....	1
15	109/10500 663/00137	To M50901	Feed Pipe—Bottom	.....	1
16	Deleted	....	Restrictor	.....	1
17	109/10400	....	Feed Pipe Assembly R.H.	.....	1
18	663/00110 663/00139	To M50901	Feed Pipe—Centre	.....	1
19	108/11100 663/00140	To M50901	Feed Pipe—Bottom	.....	1
20	663/00134 663/00138	To M50901	Feed Pipe—Top	.....	1

B-10A KINGPOST CARRIAGE

ISSUE 3

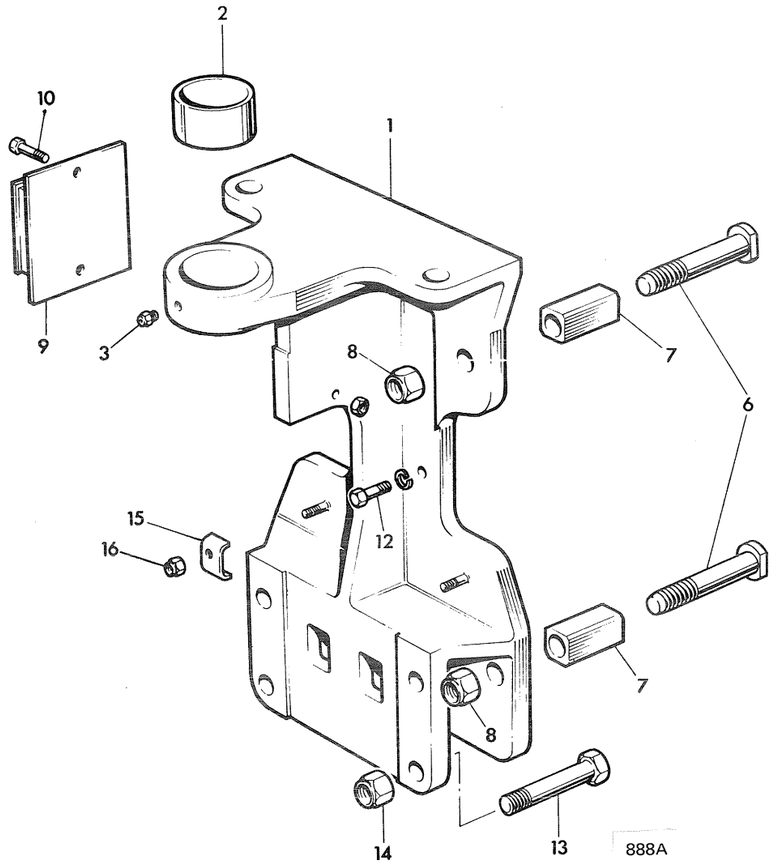

Item	Part No.	m/c No.	Description	Remarks	Qty.
1	990/02800 990/15100	To M50759	Kingpost Carriage	Includes item 2	1
2	808/00020	....	Bush	....	1
3	G15/1/1 1450/0002	No./Con.	*Grease Nipple	....	1
6	103/25503 109/10104	To M50759	Bolt	....	4
7	103/25502 Deleted	To M50759	Block	....	4
8	1340/1103 109/10201	To M50759	Nut	....	4
9	103/26000 106/83901	To M54438	*Buffer	103/26000 N/A Use 106/83901 with 102/92101	2
10	1305/6419	....	Bolt	....	2
	1340/0403	....	Nut	....	2
13	103/32601	....	Bolt	....	4
14	1340/1003	....	Nut	....	4
15	Deleted	....	Pipe Clip	....	2
16	Deleted	....	Nut	....	2
17	102/92101	....	*Spacer	....	2

B-11A SLEWING CARRIAGE AND RAM

ISSUE 2

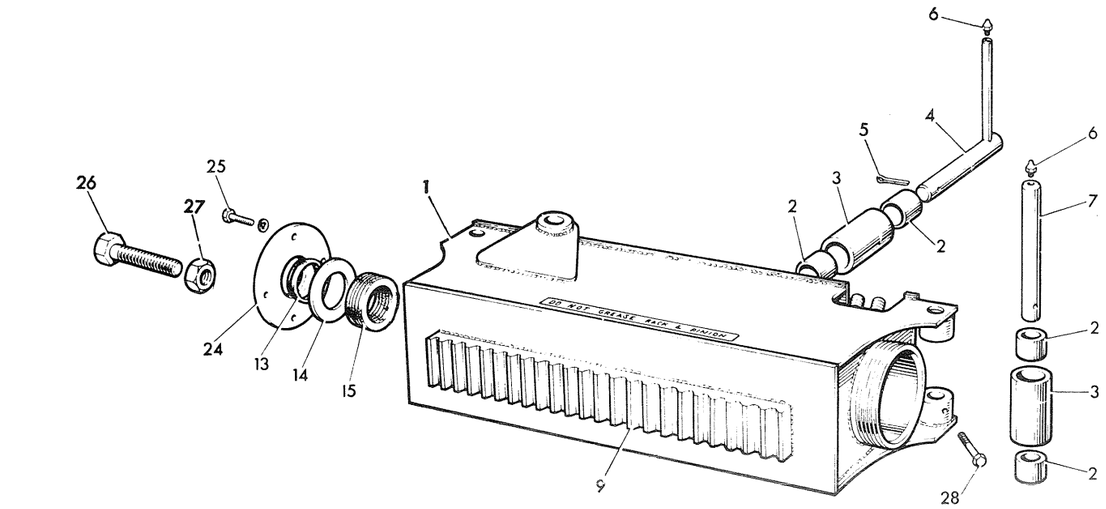

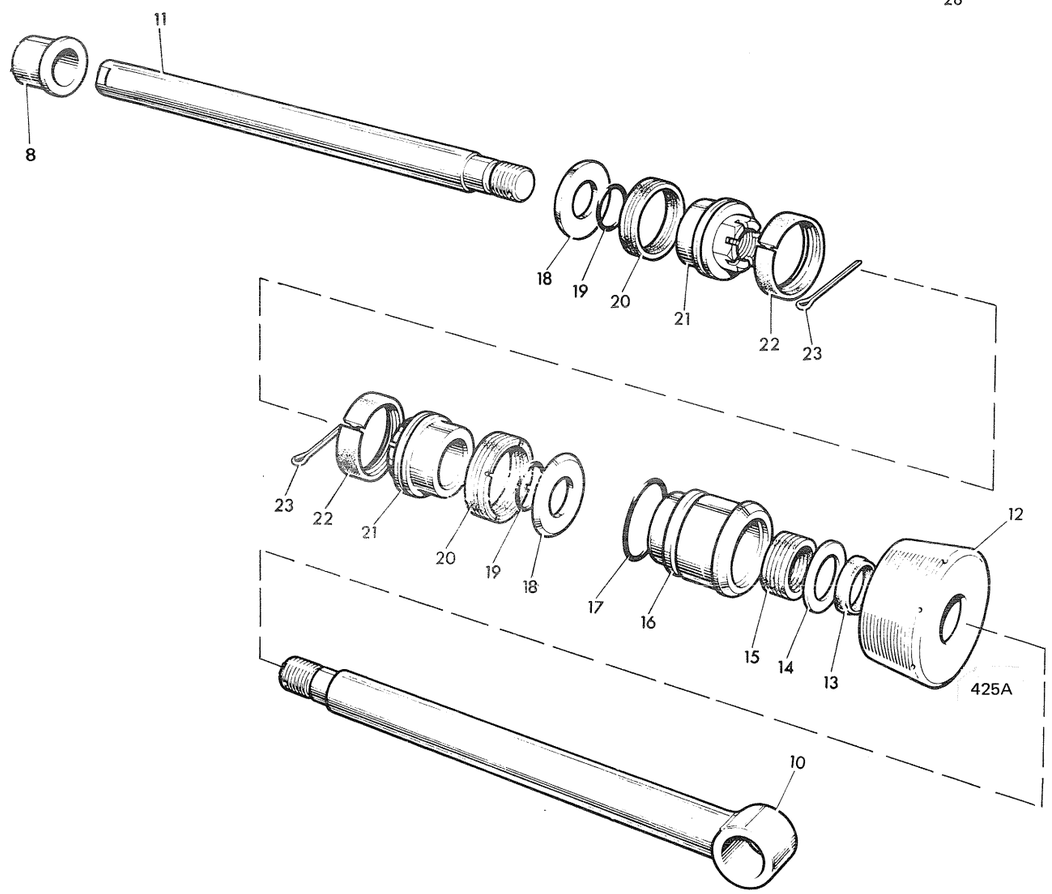

Key No.	Part No.	Up to m/c No.	Description	Remarks	No. off
	104/98900		SLEWING CARRIAGE AND RAM	Comprises Items 1 and 8 to 25	1
1	104/98800		SLEWING CARRIAGE	Includes Items 8 and 9	1
2	808/00017		Bush		6
3	104/98700		Roller	Includes Item 2	3
4	104/98600		Pivot Pin		1
5	G3/2/2		Split Pin		1
6	G15/0/1		Grease Nipple		3
7	1015/5820		Pivot Pin		2
8	808/00018		Bush		1
9	104/98808		Slewing Rack	Welded to Carriage	1
10	AEM6/508 562/12800	7863	Piston Rod		1
11	EM6/869/2 562/12701	7863	Tail Rod		1
12	EM6/18 562/01106	7863	End Cap		1
13	G5/6/1 G77/2/1	7863	Wiper Seal		2
14	EM16/19 562/01107	7863	Back-up Ring		2
15	G4/7	7863	Seal		2
	G41/6/13 G41/12/13		Chevron Seal		2
16	EM6/17 562/12703	7863	Gland Bearing		1
17	G2/10/2		'O' Ring		1
18	562/01104		Back-up Ring		2
19	G2/13/2 G2/14/2	7863	'O' Ring		2
20	G41/2/13		Chevron Seal		2
21	562/12702		Piston Head Nut		2
22	562/01103		Wear Ring		2
23	G3/13/2		Split Pin		2
24	EM6/32 562/12704	7863	Seal Retaining Plate		1
25	1305/0408		Bolt		4
	G16/6/2		Spring Washer		4
26	104/98901		Adjusting Bolt		1
27	1340/1006		Nut		1
28	1305/8422		Bolt	Roller Pin to Carriage	2
	1340/0403		Nut		2
29	EM6/721 Deleted	7863	Retaining Washer	(Not Illustrated)	2
30	EM6/551 Deleted	7863	Piston Head	(Not Illustrated)	2
31	1350/1103 Deleted	7863	Nut	(Not Illustrated)	2

B-12A SLEWING ACUTUATOR

ISSUE 3

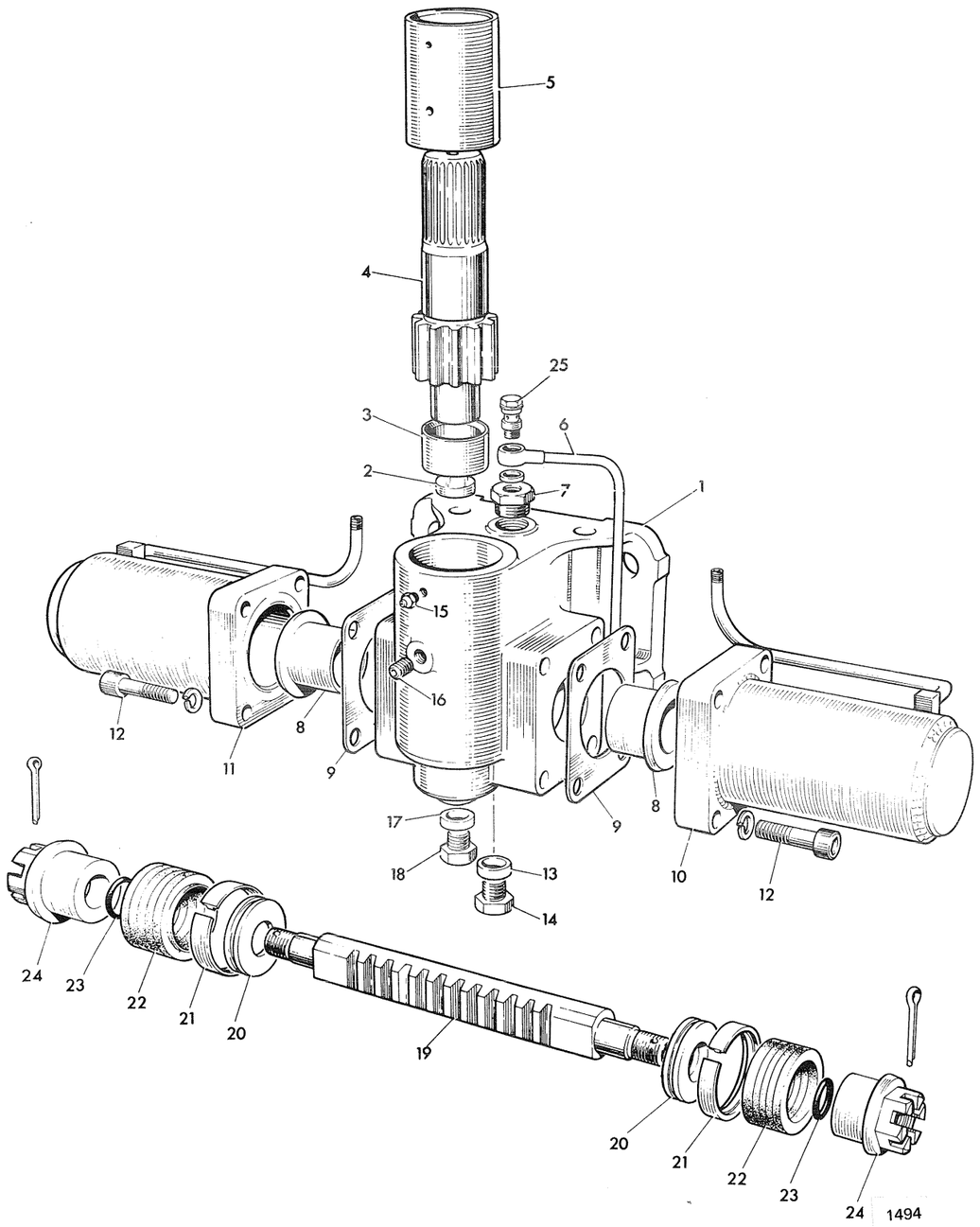

Item	Part No.	m/c No.	Description	Remarks	Qty.
	109/11900 109/35200	Superseded	*Slewing Actuator See 180° Catalogue	....	1
1	990/05300	....	Body Assembly	Includes items 2 to 5, 8, 16 and 19	1
2	103/24805	....	Thrust Pad	....	1
3	103/24806	....	Bush	....	1
4	103/24807	....	Gear	....	1
5	103/24804	....	Bush	....	1
6	103/24901	....	Pipe	....	1
7	102/74002	....	Plug	....	1
8	109/11901	....	Bush	....	2
9	813/00026	....	Gasket	....	2
10	564/07400	....	*Cylinder	Correction was 564/07300	1
11	564/07300	....	*Cylinder	Correction was 564/07400	1
12	G52/22	....	Capscrew	Cylinder to Body	8
	1416/0013	....	Spring Washer	....	8
13	1403/0008	....	Washer	....	1
14	G8/7 106/69303	Superseded	*Plug	....	1
15	G15/1 1450/0002	No./Con.	*Grease Nipple	....	1
16	G50/6	....	Grub Screw	....	1
17	1403/0008	....	Washer	....	1
18	G8/7 106/69303	Superseded	*Plug	....	1
19	990/05400	....	Piston Rod	Includes items 20 to 24	1
20	564/07504	....	Back-up Ring	....	2
21	564/01003	....	Wear Ring	....	2
22	G41/6 2411/1014	No./Con.	*Chevron Seal	....	2
23	G2/39 2401/0302	No./Con.	*'O' Ring	....	2
24	564/07503	....	Piston Head	....	2

B-12A SLEWING ACUTUATOR

ISSUE 2

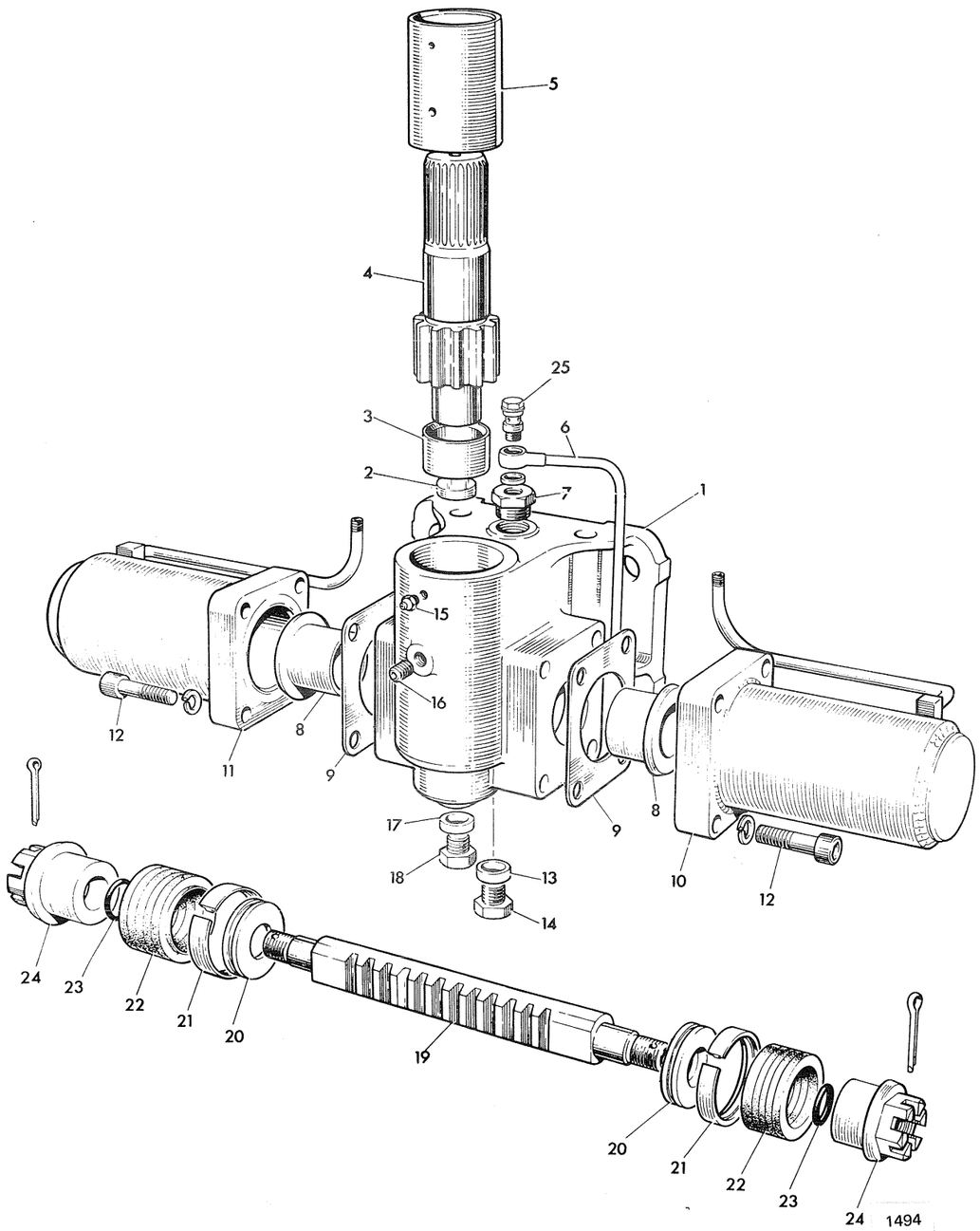

Item	Part No.	m/c No.	Description	Remarks	Qty.
	G3/31 2103/1518	No./Con.	*Split Pin		2
25	103/26300		Banjo Bolt and Washer		1
	103/26302		Washer	Large	1
	103/26303		Washer	Small	1
	564/07700		Feed Pipe R.H.		1
	564/07800		Feed Pipe L.H.		1

B-13A BOOM

ISSUE 2

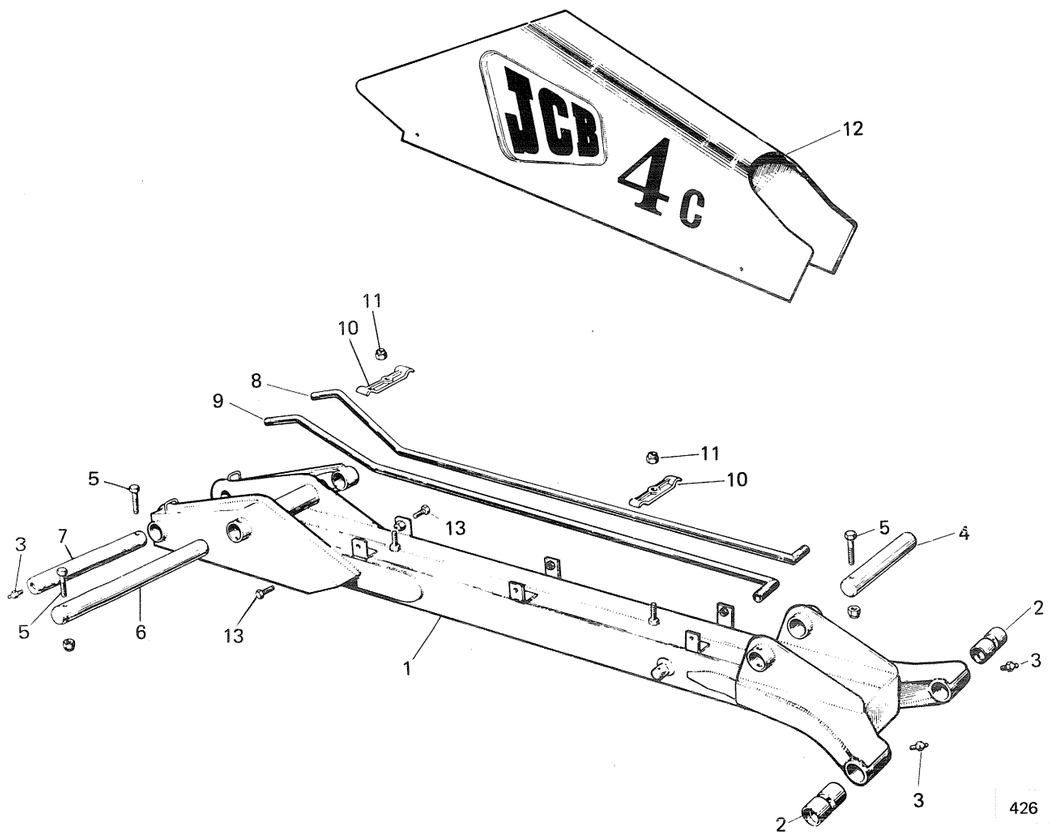

Key No.	Part No.	Up to m/c No.	Description	Remarks	No. off
1	104/95500		BOOM	Includes Item 2	1
2	808/00014		Bush		2
3	G15/0/1		Grease Nipple		3
4	1021/4027		Pivot Pin		1
5	1305/3426		Bolt		3
	1340/0403		Nut		3
6	1021/4077		Pivot Pin		1
7	1021/5861		Pivot Pin		1
8	104/96500		Feed Pipe R.H.	Bucket Ram	1
9	104/96400		Feed Pipe L.H.	Bucket Ram	1
10	EM6/500		Pipe Clip	JCB 4	2
	104/95401		Pipe Clip	JCB 4C	2
11	1340/0703		Nut	Clip to Boom	2
12	AEM6/132		Boom Cover	JCB 4	1
	104/96600		Boom Cover	JCB 4C	1
13	1305/0408		Bolt	Cover to Boom	6

B-13B BOOM

ISSUE 3

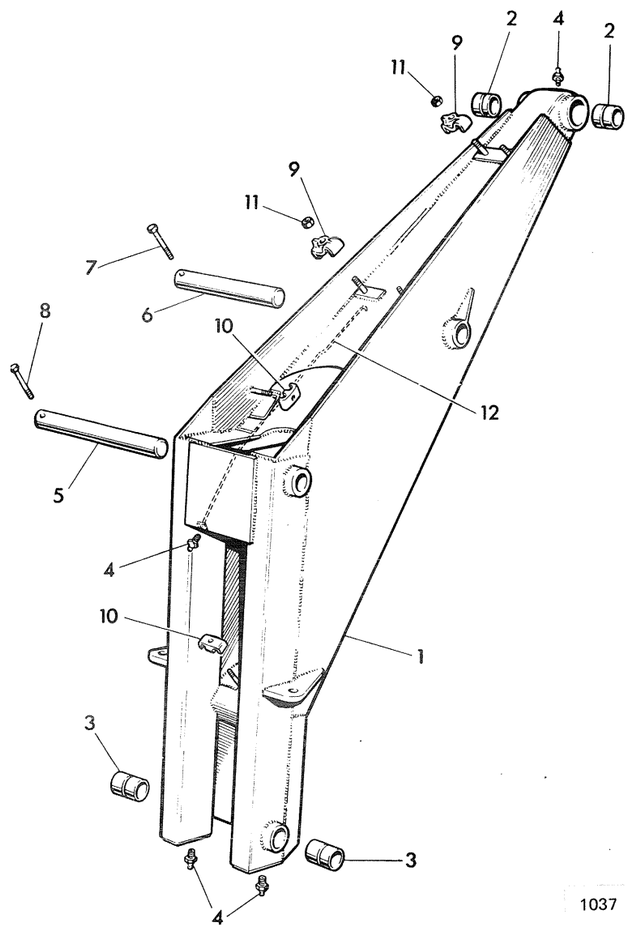

Item	Part No.	m/c No.	Description	Remarks	Qty.
1	990/02900	....	Boom	....	1
2	808/00022 808/00025 808/00022	To M47395 To M54356	*Bush	808/00025 N/A Use 808/00022 2 off & 106/88701	2
3	808/00021 808/00029	Superseded	Bush	....	2
4	G15/1/1 1450/0001	No./Con.	*Grease Nipple	....	4
5	1021/2069	....	*Pivot Pin	Correction was 1021/2049	1
6	1021/2043	....	Pivot Pin	....	1
7	1305/3430	....	Bolt	....	1
8	1305/3426 1340/0403	....	Bolt Nut	....	1 2
9	821/00006 Deleted	To M49107	Pipe Clamp	....	4
10	821/00004 821/00004	To M49107	Pipe Clamp	....	4 2
11	1340/0203 1340/0203	To M49107	Nut	....	8 5
12	647/00500 202/13700 629/05500	To M48623 Superseded	*Nylon Tube Hose	4 ft. Long	As Reqd. 1
13	103/24006 109/11601	To M48623	Adapter–90°	....	1
14	200/04604	....	Nipple Adapter	....	1
	1405/0004	....	Washer	....	1
15	1305/0406	....	Bolt	....	2
	1416/0008	....	Washer	....	2
16	821/00021	....	Clamp	....	1
17	1305/0404	....	Bolt	....	2
	677/00040	....	Grease Pipe	Boom Base	2
	106/88901	....	*Slew Lock Ear	....	2

B-14A DIPPER, LEVER AND LINK

ISSUE 2

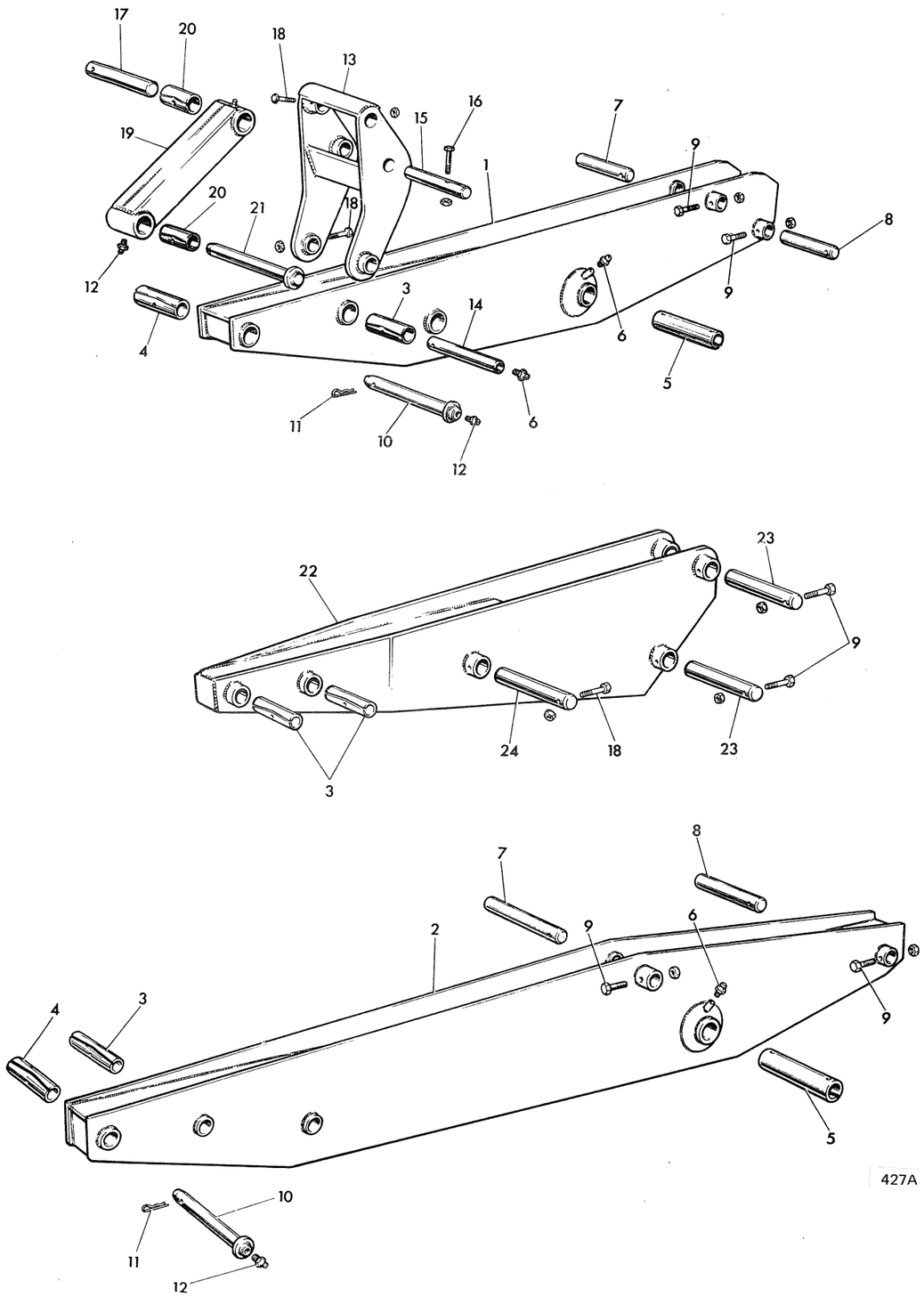

Key No.	Part No.	Up to m/c No.	Description	Remarks	No. off
1	AEM6/487/7		DIPPER—Short JCB 4		1
	104/97800		DIPPER—Short JCB 4C	Includes Items 3 4 and 5	1
2	104/98000		DIPPER—Long	Includes Items 3 4 and 5	1
3	1208/0031		Spring Bush		1
4	1208/0031		Spring Bush JCB 4		1
	1208/0034		Spring Bush JCB 4C		1
5	1201/0002		Spring Bush		1
6	G15/0/1		Grease Nipple		3
7	1021/4027 1021/2027	No./Con.	*Pivot Pin		1
8	1021/4018 1021/2018	No./Con.	*Pivot Pin		1
9	1305/3426		Bolt		2
10	911/00400		Pivot Pin		1
	537/16600		*Pivot Pin	21 in. from Washer to hole in Pin	1
	911/02800 911/00800	Superseded	*Pivot Pin	18 in. Bucket only	1
	537/16500		*Pivot Pin	12½ in. from Washer to hole in Pin	1
11	EM4/110/3 530/14001	No./Con.	*Hair Pin Clip		1
12	G15/1/1		Grease Nipple		3
13	104/98300		TIPPING LEVER		1
14	1019/3847		Pivot Pin		1
15	1021/4021 1021/2021	No./Con.	*Pivot Pin		1
16	1305/3426		Bolt		1
	1340/0403		Nut		1
17	1019/2045		Pivot Pin		1
18	1305/3424		Bolt		1
	1340/0403		Nut		1
19	AEM6/163		TIPPING LINK JCB 4	Includes Items 12 and 20	1
	104/98400		TIPPING LINK JCB 4C	Includes Items 12 and 20	1
20	1208/0021		Spring Bush		2
21	911/00200		Pivot Pin		1
	537/16600		*Pivot Pin	21 in. from Washer to hole in Pin	1
	911/00800		Pivot Pin	18 in. Bucket only	1
	537/16500		*Pivot Pin	12½ in. from Washer to hole in Pin	1
22	AEM6/534		Dipper Extension JCB 4		1
23	1021/2040		Pivot Pin		2
24	1019/4062 1019/2062	No./Con.	*Pivot Pin		1

B-14B DIPPER, LEVER AND LINK

ISSUE 3

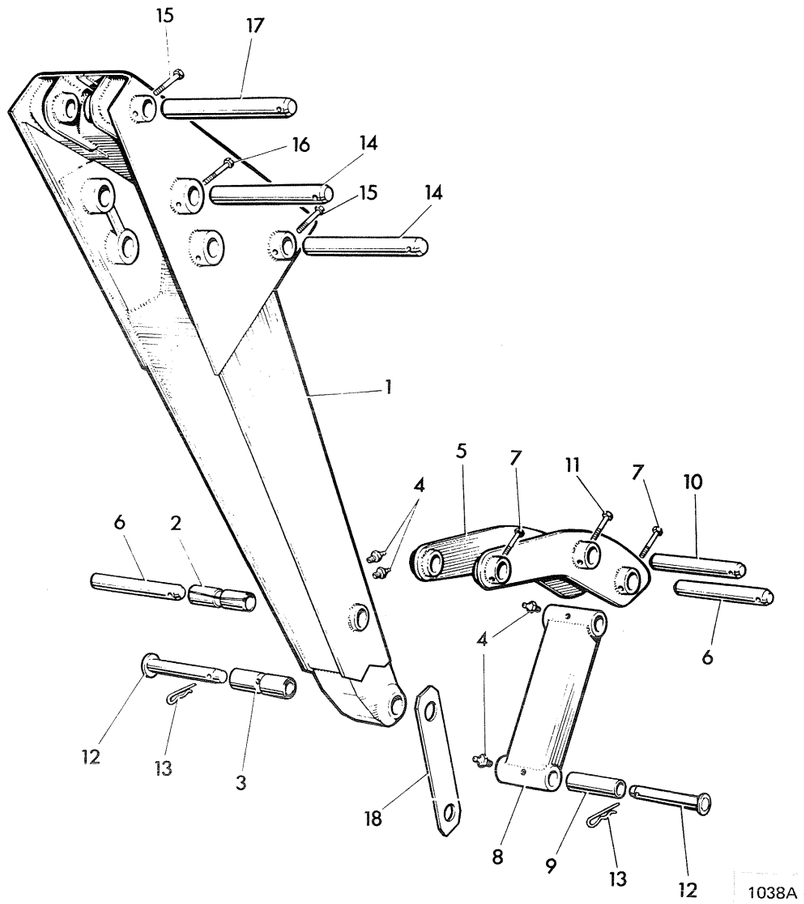

Item	Part No.	m/c No.	Description	Remarks	Qty.
1	990/03700	.....	..... Dipper	....	1
2	1209/0034	.....	..... :Bush	....	1
3	809/00007	.....	..... :Liner Bearing	....	1
4	G15/4/1 1450/0002	No./Con.	..... *Grease Nipple	....	4
5	109/10900	.....	..... Tipping Lever	....	1
6	1021/2033	.....	..... Pivot Pin	....	2
7	1305/3428	.....	..... Bolt	....	2
	1340/0403	.....	..... Nut	....	2
8	109/11000 990/19900	Superseded	..... *Tipping Link	....	1
9	1209/0034	.....	..... :Bush	....	2
10	1021/2036	.....	..... Pivot Pin	....	1
11	1305/3428	.....	..... Bolt	....	1
	1340/0403	.....	..... Nut	....	1
12	911/03600	.....	..... Pivot Pin	....	2
	911/00700	.....	..... Pivot Pin	18in. Bucket only	2
13	EM4/110/4 530/14001	No./Con.	..... *Clip	....	2
14	1021/2053	.....	..... Pivot Pin	....	2
15	1305/3428	.....	..... Bolt	....	2
	1340/0403	.....	..... Nut	....	2
16	1305/3433	.....	..... Bolt	....	1
	1340/0403	.....	..... Nut	....	1
17	1021/2057	.....	..... Pivot Pin	....	1
18	106/50001	.....	..... Transport Strap	....	1

B-15A WHEELS AND TYRES

ISSUE 2

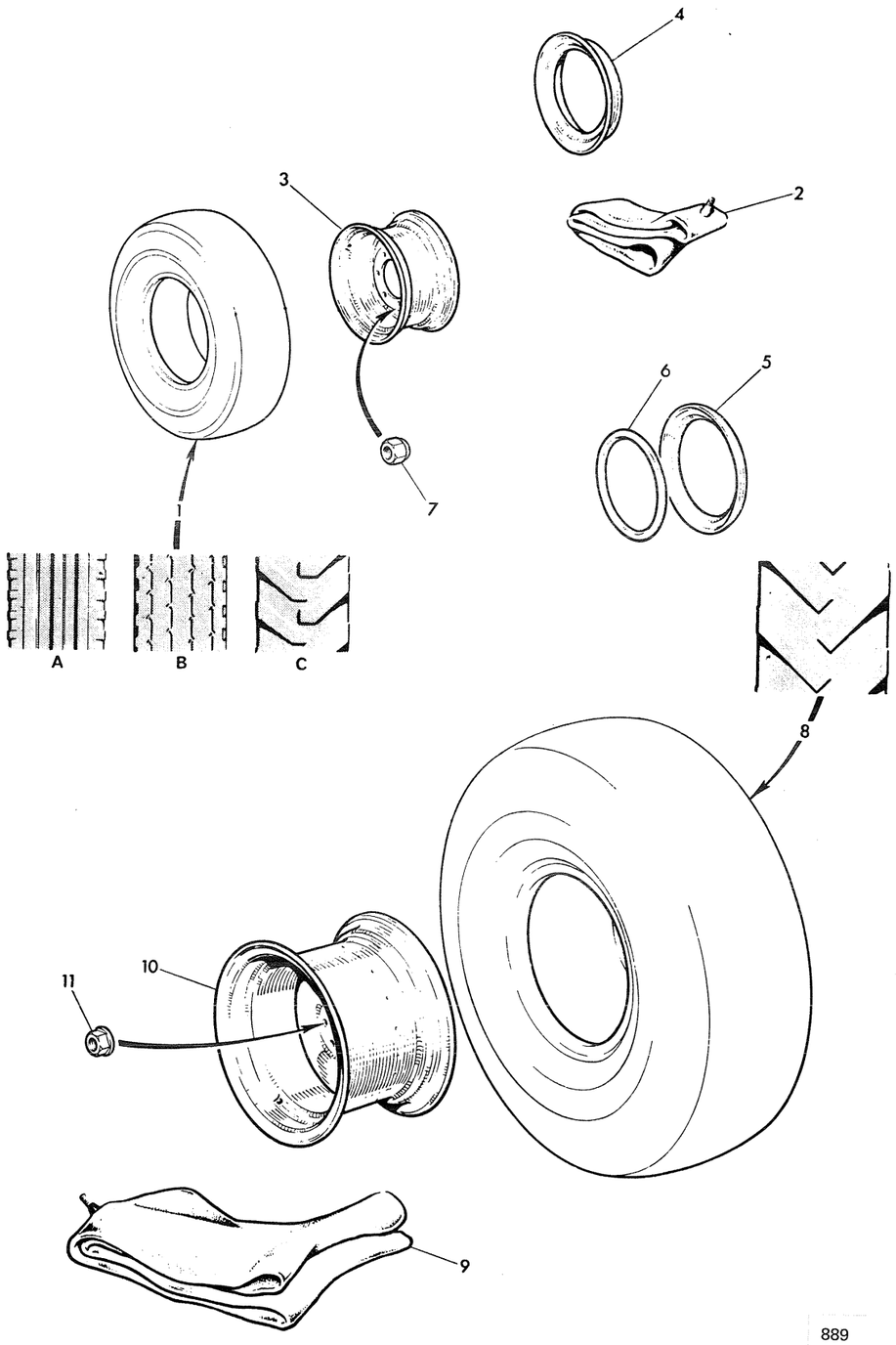

Item	Part No.	m/c No.	Description	Remarks	Qty.
1	42/300500	.....	..... *Tyre 9.00 x 16 x 10 Tread A or B	JCB 4 & 4C	2
	42/500100	.....	..... *Tyre 10.50 x 16 x 12	JCB 4 & 4C	2
	G53/22/1 42/202000	No./Con.	..... *Tyre 12.00 x 18 x 8	JCB 4D Tread C	2
	G53/23 42/202400	No./Con.	..... *Tyre 15 . 50 x 19 . 50 x 10	JCB 4D Tread C	2
2	832/00002	.....	..... *Inner Tube (9.00 x 16 tyre)	....	2
	832/00003	.....	..... *Inner Tube (10.50 x 16 tyre)	....	2
	G85/13/1 832/00007	No./Con.	..... *Inner Tube (12.00 x 18 tyre)	....	2
	G85/14/1 832/00008	No./Con.	..... *Inner Tube (15.50 x 19.50 tyre)	....	2
3	WT2/13	.....	..... Wheel (9.00 x 16 tyre)	JCB 4	2
	WT2/8/1 41/100700	No./Con.	..... *Wheel (9.00 x 16 tyre)	JCB 4C	2
	WT2/26/1 42/100500	No./Con.	..... *Wheel (10.50 x 16 tyre)	JCB 4C	2
	WT4/52/1 41/300100	No./Con.	..... *Wheel (12.00 x 18 tyre)	JCB 4D	2
	WT4/86/1 41/100600	No./Con.	..... *Wheel (15.50 x 19.50 tyre)	JCB 4D	2
4	WT6/2	.....	..... Flange (9.00 x 16 tyre)	....	2
5	WT2/108	.....	..... Flange (10.50 x 16 tyre)	....	2
6	WT2/109	.....	..... Locking Ring (10.50 x 16 tyre)	....	2
7	103/21109	.....	..... Wheel Nut–Front	JCB 4 & 4C.....	As Reqd.
	106/00201	.....	..... Wheel Nut–Front	JCB 4D	As Reqd.
8		.....	..... Tyre 14 x 30 x 8	JCB 4 & 4C.....	2
	42/202100	.....	..... *Tyre (18.4 x 26 x 10)	JCB 4D	2
	G53/24/1 42/202500	No./Con.	..... *Tyre (23 x 26 x 8)	JCB 4D	2
9		.....	..... Inner Tube (14 x 30 tyre)	....	2
	832/00006	.....	..... *Inner Tube (18.4 x 26 tyre)	....	2
	G85/15/1 832/00007	No./Con.	..... *Inner Tube (23 x 26 tyre)	....	2

B-15A WHEELS AND TYRES

ISSUE 1

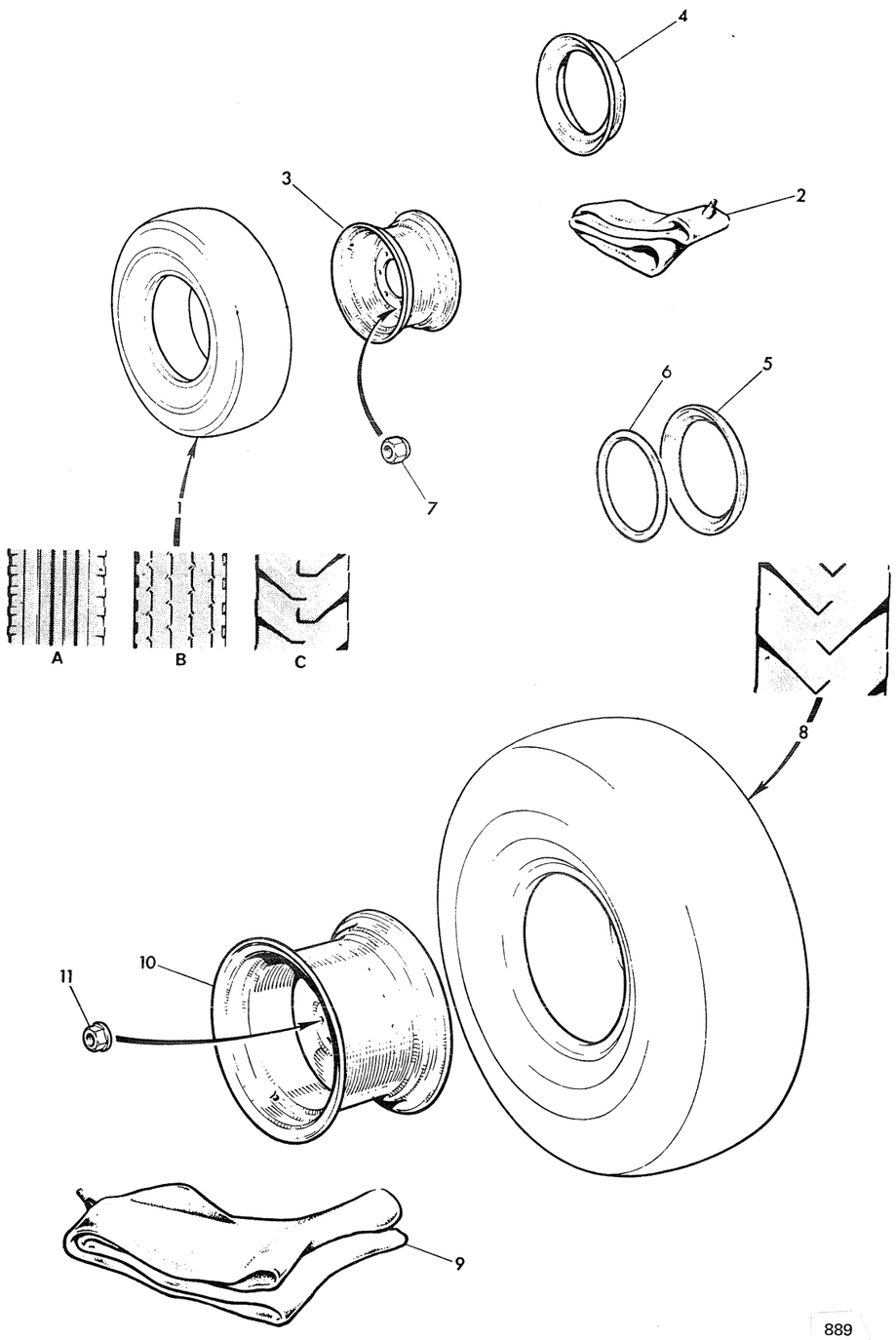

Item	Part No.	m/c No.	Description	Remarks	Qty.
10	AEM6/715 AEM6/966	Superseded	*Wheel (14 x 30 tyre)	JCB 4	2
	WT2/30 AEM6/966	Superseded	*Wheel (14 x 30 tyre)	JCB 4C Ford	2
	AEM16/48	....	*Wheel (14 x 30 tyre)	JCB 4C BMC	2
	103/65300 41/100900	No./Con.	*Wheel (18.4 x 26 tyre)	JCB 4D	2
	109/15200 109/15600 41/100800	Superseded ..... Superseded	Wheel (23 x 26 tyre)	JCB 4D	2
11	T8/15R	....	Wheel Nut—Rear	JCB 4 & 4C.....	As Reqd.
	ATJ 7898	....	Wheel Nut—Rear	JCB 4D	As Reqd.

B-16A TOOL KIT

ISSUE 2

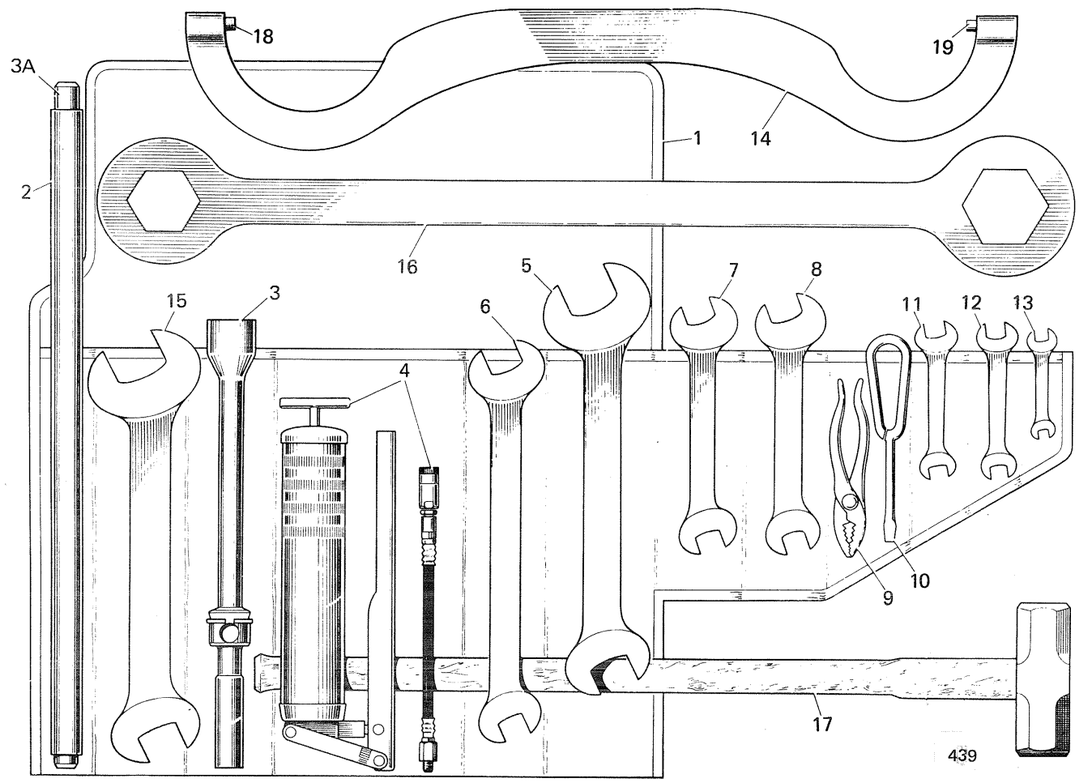

Item	Part No.	m/c No.	Description	Remarks	Qty. m/c	Qty. Assy.
	104/76500	.....	..... Tool Kit	....	1	
1	G73/0/1 825/99817	No./Con.	..... *:Bag	....		1
2	103/27502 825/99906	No./Con.	..... :Extension Tube	....		1
3	103/27500	.....	..... :Wheel Brace	....		1
3A	804/00056 825/99902	No./Con.	..... *::Tommy Bar	....		1
4	103/27800 915/00100	No./Con.	..... *:Grease Gun	....		1
5	N.S.P.	.....	..... :Spanner 1½in. x 1.7/8in.A/F	Use 825/00103 & 825/00105		1
6	G66/7	.....	..... :Spanner 1in. x 1.5/16in. A/F	....		1
7	G66/1	.....	..... :Spanner 15/16in. x 1.1/8in. A/F	....		1
8	G66/3	.....	..... :Spanner ¾in. x ½in. B.S.F.	....		1
9	G72/0 825/99805	No./Con.	..... *:Pliers	....		1
10	G71/0 825/99808	No./Con.	..... *:Screwdriver	....		1
11	G66/0 825/00005	Superseded	..... *:Spanner 11/16in. x ¾in. A/F	....		1
12	G66/6 825/00004	Superseded	..... *:Spanner 9/16in. x 5/8in. A/F	....		1
13	G66/5 825/00002	Superseded	..... *:Spanner 7/16in. x ½in. A/F	....		1
14	AEM6/640 915/00500	Superseded	..... *:'C' Spanner	JCB 4		1
	104/76600	.....	..... :'C' Spanner	JCB 4C Includes items 18 & 19		1
15	G66/9	.....	..... :Spanner 1½in. BSF x 1.67in. A/F	....		1
16	104/76501 825/99907	No./Con.	..... *:Ring Spanner	....		1
17	G74/0/2 825/99809	No./Con.	..... *:7lb. Sledge Hammer	....		1
18	104/76602	.....	..... :Peg	....		1
19	103/38001 822/00010	No./Con	..... :Peg	....		1

B-16B TOOL KIT

ISSUE 2

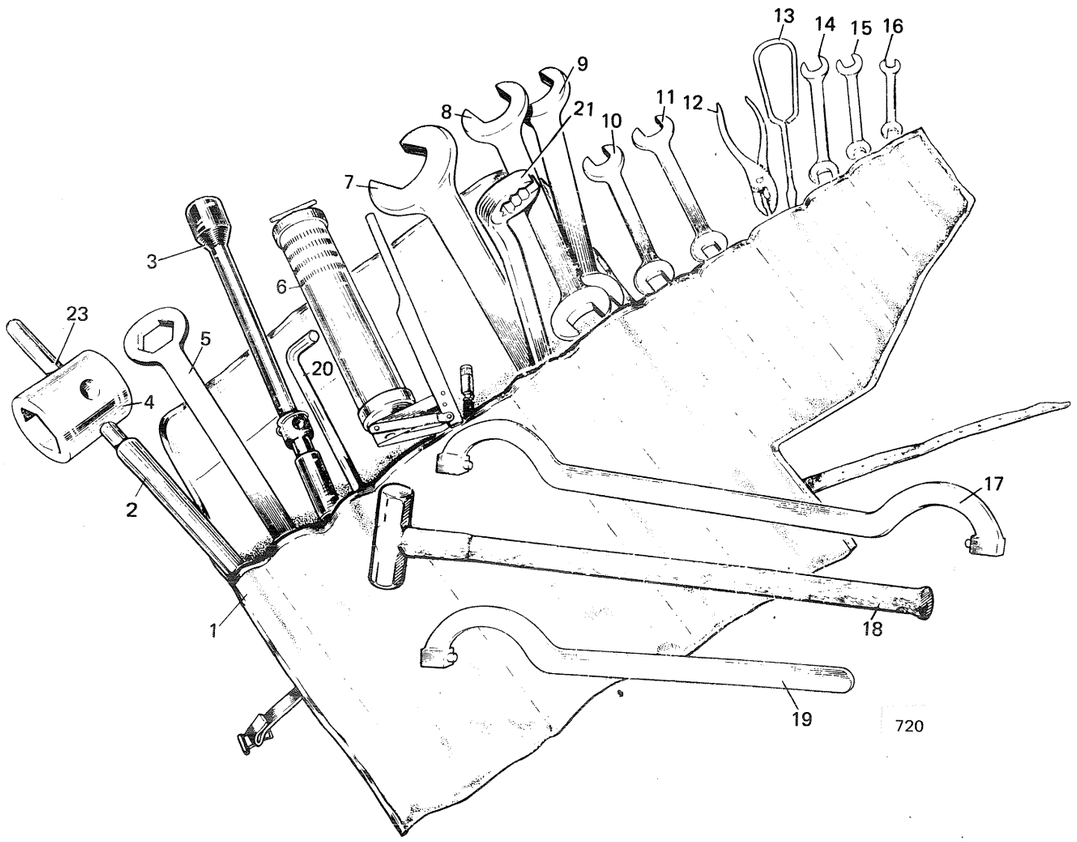

Key No.	Part No.	Up to m/c No.	Description	Remarks	No. off
	103/65600 915/00800	Superseded	*TOOL KIT	Includes Items 1 to 23	1
1	G73/0/1 825/99817	No./Con.	*Tool Bag		1
2	103/27502		Extension Tube		1
3	106/00301 825/99901	No./Con.	*Wheel Brace		1
4	†103/26502		Socket Spanner		1
5	103/26503 825/99904	No./Con.	*Ring Spanner		1
6	103/27800 915/00100	No./Con.	*Grease Gun		1
7	G66/4/1		Spanner	$1\frac{1}{2}$in. B.S.P.	1
8	G66/2/1		Spanner	$1\frac{1}{2}$in. x $1\frac{7}{8}$in. A/F	1
9	G66/7/2		Spanner	1in. x $1\frac{5}{16}$in. A/F	1
10	G66/1/1		Spanner	$\frac{5}{16}$in. x $1\frac{1}{8}$in. A/F	1
11	G66/3/1		Spanner	$\frac{1}{2}$in. x $\frac{3}{4}$in. B.S.P.	1
12	G72/0/1 825/99805	No./Con.	*Pliers		1
13	G71/0/1 825/99808	No./Con.	*Screwdriver		1
14	G66/0/1 825/00005	Superseded	*Spanner	$\frac{11}{16}$ in. x $\frac{3}{4}$in. A/F	1
15	G66/6/2 825/00004	Superseded	*Spanner	$\frac{9}{16}$ in. x $\frac{5}{8}$in. A/F	1
16	G66/5/1 825/00002	Superseded	*Spanner	$\frac{7}{16}$ in. x $\frac{1}{2}$in. A/F	1
17	†103/27600 915/00400	No./Con.	*'C' Spanner		1
18	†G74/0/2 825/99809	No./Con.	*7 lb. Sledge Hammer		1
19	†103/27700		'C' Spanner		1
20	†103/26504 825/00506	No./Con.	*Hexagon Key	$\frac{5}{8}$ in. A/F	1
21	†103/26501		Spanner	$\frac{5}{8}$in. B.S.W. x $\frac{11}{16}$in. B.S.F.	1
22	†103/26505		Spanner	$\frac{9}{16}$in. B.S.W. (not illustrated)	1
23	†804/00056 825/99902	No./Con.	*Tommy Bar		1
	†103/65601		Spanner	$\frac{3}{4}$in. B.S.W. (not illustrated)	1

† Loose items

Section B

Page B–16C to B–19A

B-16C TOOL KIT

ISSUE 2

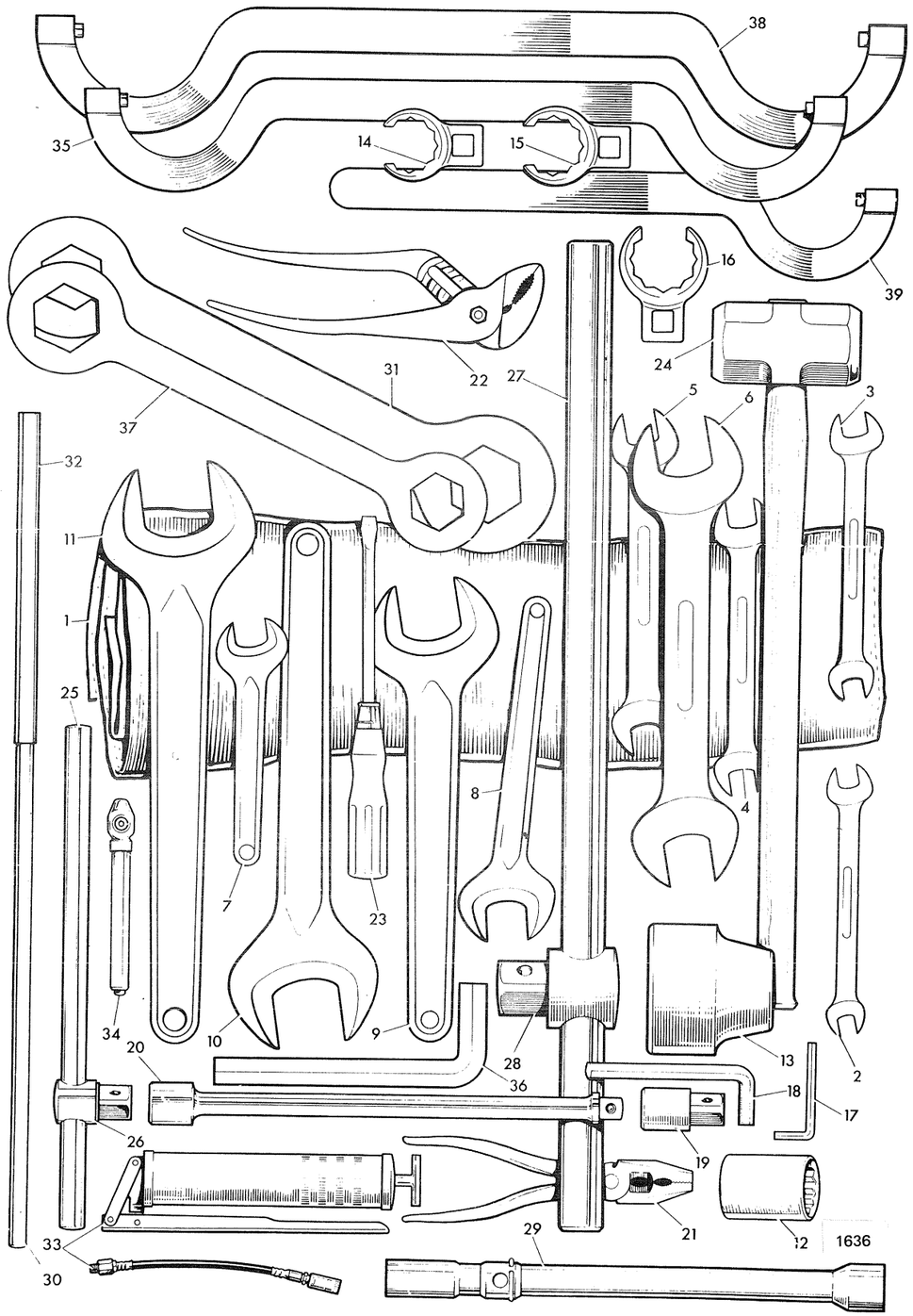

Item	Part No.	m/c No.	Description	Remarks	Qty.
	915/00900	....	Tool Kit	....	1
1	825/99817	....	:Tool Bag	....	1
2	825/00002	....	:Spanner	7/16in. x 1/2in. A/F D.O.E.	1
3	825/00003	....	:Spanner	1/2in. x 9/16in. A/F D.O.E.	1
4	825/00004	....	:Spanner	9/16in. x 5/8in. A/F D.O.E.	1
5	825/00005	....	:Spanner	11/16in. x 3/4in. A/F D.O.E.	1
6	825/00007	....	:Spanner	1.1/8in. x 1.5/16in. A/F D.O.E.	1
7	825/00101	....	:Spanner	3/8in. Whit S.O.E.	1
8	825/00102	....	:Spanner	9/16in. White S.O.E.	1
9	825/00103	....	:Spanner	1.1/2in. A/F S.O.E.	1
10	825/00104	....	:Spanner	1.11/16in. A/F S.O.E.	1
11	825/00105	....	:Spanner	1.7/8in. A/F S.O.E.	1
12	825/00301	....	:Socket	1.1/8in. A/F	1
13	825/00306	....	:Socket	3in. A/F	1
14	825/00401	....	:Crowfoot Spanner	1.1/8in. A/F	1
15	825/00402	....	:Crowfoot Spanner	1.5/16in. A/F	1
16	825/00403	....	:Crowfoot Spanner	1.1/2in. A/F	1
17	825/00501	....	:Allen Key	1/8in. A/F	1
18	825/00504	....	:Allen Key	5/16in. A/F	1
19	825/99801	....	:Adapter	3/4in. Male x 1/2in. Female	1
20	825/99803	....	:Extension Bar	1/2in. Sq. Drive x 10in. Long	1
21	825/99805	....	:7in. Pliers	....	1
22	825/99806	....	:Pipe Grips	....	1
23	825/99808	....	:Screwdriver	....	1
24	825/99809	....	:7lb. Sledge Hammer	....	1
25	825/99810	Superseded	:Tommy Bar	....	1
26	825/99811 915/02700	Superseded	*Sliding Tee *Tommy Bar & Tee	1/2in. Drive	1
27	825/99814	Superseded	*:Tommy Bar	....	1
28	825/99815 915/02900	Superseded	:Sliding Tee *Tommy Bar & Tee	1in. Drive	1

B-16C TOOL KIT

ISSUE 1

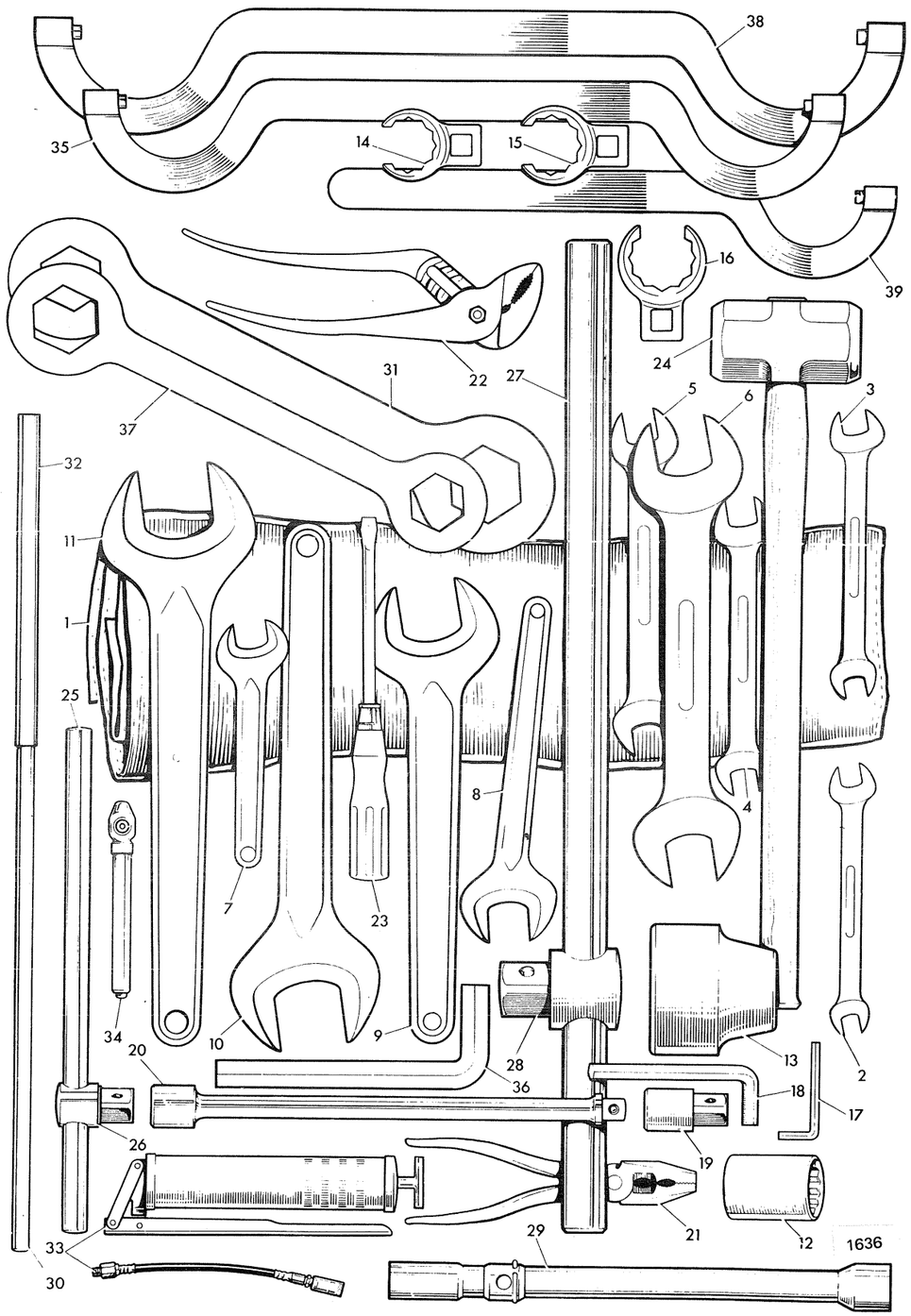

Item	Part No.	m/c No.	Description	Remarks	Qty.
29	825/99901	....	:Wheel Brace	....	1
30	825/99902	....	:Tommy Bar	....	1
31	825/99904	....	:Ring Spanner	....	1
32	825/99906	....	:Sleeve–Tommy Bar	....	1
33	915/00100	....	:Grease Gun	....	1
34	915/01100 915/03100	Superseded	*:Tyre Pressure Gauge	....	1
35	Not Applicable				
36	825/00506	....	:Allen Key	5/8in. A/F	1
37	825/99907	....	:Ring Spanner	....	1
38	915/00400	....	:'C' Spanner	....	1
39	915/00500	....	:'C' Spanner	....	1
40	825/00307	....	:Socket	3/4in. A/F	1
41	915/02000	....	:Peg Spanner	....	1
42	825/00015	....	*:Spanner 1.3/16in. x 1.1/4in. A/F	....	1

B-17A HEATER INSTALLATION

ISSUE 2

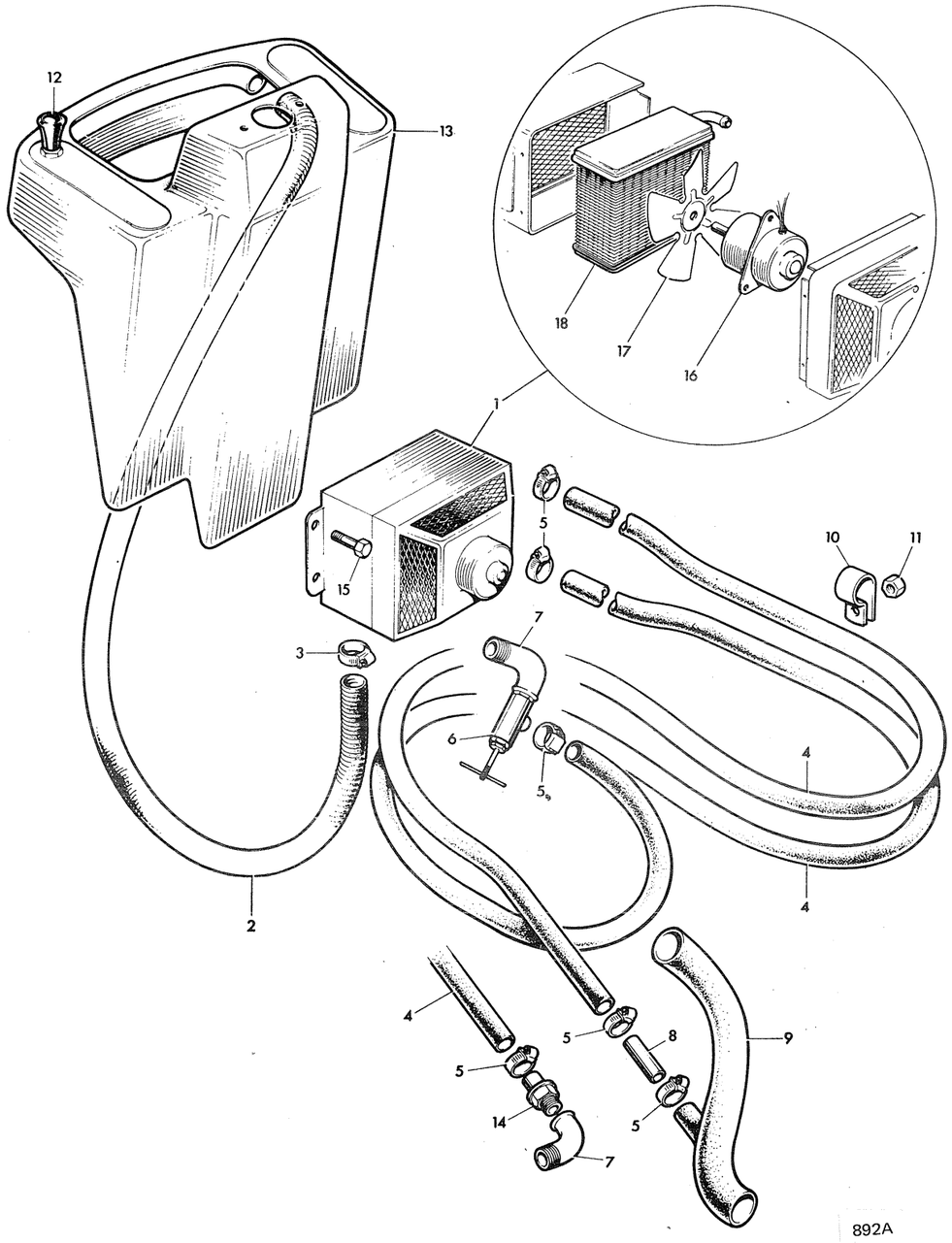

Item	Part No.	m/c No.	Description	Remarks	Qty.
	106/70000	....	Heater Kit	....	1
1	106/66001	....	Heater	....	1
2	648/20100	....	Hose	Supplied in Multiples of 1ft.	As Reqd.
		....	Hose	45in. Long	1
3	2201/0009	....	Clip	....	2
4	648/00100 648/00200	Superseded	*Hose	Supplied in Multiples of 1ft.	As Reqd.
		....	Hose	8ft. Long	1
5	2201/0006	....	Clip	....	5
6	103/40003 202/25603	Superseded	*Tap	....	1
7	103/40004	....	Elbow	....	1
8	103/40006	....	Connector	....	1
9	103/65001	....	Hose	Radiator Bottom	1
10	106/66003	....	Clamp	....	4
11	1340/0003	....	Nut	....	4
12	703/06600 See item 20	Superseded	*Heater Switch	....	1
13	See JCB BMC	....	Instrument Panel Surround	With Demister Slot	1
14	Deleted	....	Adapter	....	1
15	1305/0206	....	Bolt	Heater to Floorplate	4
	1411/0003	....	Washer	....	4
16	106/70101	....	Motor	....	1
17	106/70102	....	Fan	....	1
18	106/70103	....	Radiator	....	1
19	202/25610	....	Elbow	Not Illustrated	1
20	990/30100	....	*Rheostat Switch Kit	....	1
21	707/07800	....	*:Switch	....	1
22	707/07900	....	*:Resistor	....	1

B-18A HAND REFUELLING PUMP

ISSUE 1

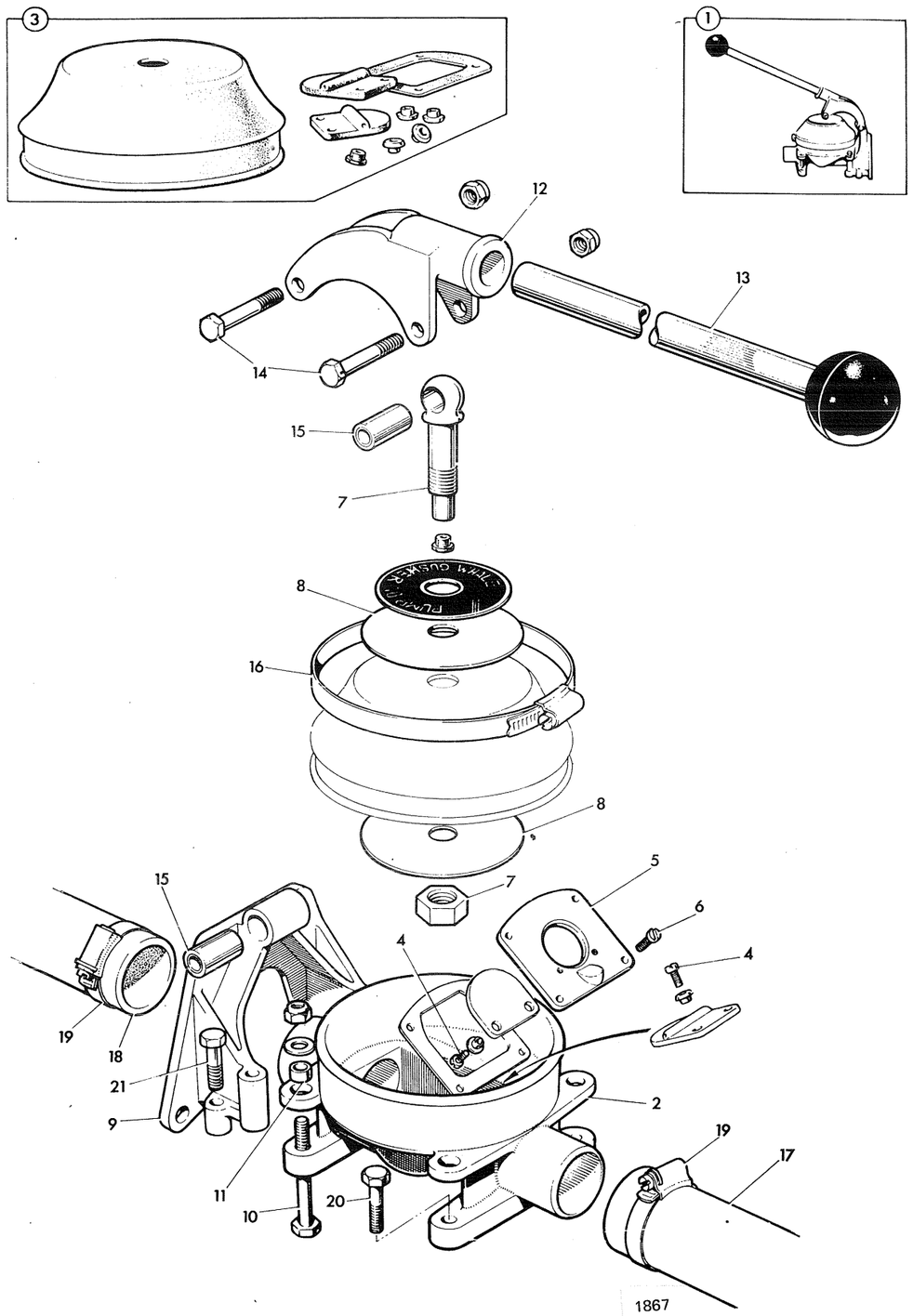

Key No.	Part No.	Up to m/c No.	Description	Remarks	No. off
1	106/78600		HAND REFUELLING PUMP		1
2	N.S.P.		Body		1
3	106/78605		Diaphragm Kit		1
4	106/78612		Screw		4
5	106/78611		Screw		4
6	106/78610		Valve Plate		1
7	106/78606		Eye Bolt and Nut		1
8	106/78604		Clamping Plate		2
9	106/78607		Bracket		1
10	1305/1514		Bolt		2
	1340/1503		Nut		2
	1411/0001		Washer		2
11	106/78608		Spacer		2
12	106/78602		Fork		1
13	106/78601		Handle and Knob		1
14	1305/1514		Bolt		2
	1340/1503		Nut		2
15	106/78603		Bush		2
16	2201/0019		Clip		1
17	648/00704		Hose		1
18	648/00703		Hose		1
19	2201/0009		Clip		2
20	1360/0206		Bolt		2
	1414/0011		Washer		4
	1358/0201		Nut		2
21	1360/0206		Bolt		2
	1414/0011		Washer		4
	1358/0201		Nut		2

B19–A PAINT

ISSUE 2

Key No.	Part No.	Up to m/c No.	Description	Remarks	No. off
	G56 G or Q	.....	Lemon Chrome—Spray or Brush—Gallons or Quarts	.....	.....
	G56/1 G or Q	.....	Bright Red—Spray or Brush—Gallons or Quarts	.....	.....
	G56/2 Q	.....	*Black—Quarts only	.....	.....
	G56/3 Q	.....	White—Quarts only	.....	.....

End of Section B

C

Page C–1A to C–2A

Description	JCB 4	Up to m/c No.	JCB 4C	Up to m/c No.	JCB 4D	Up to m/c No.
Electrical Fittings	C-1a	.....	C-1a	.....	C-1a	.....
***Head Lamp**	.....	.....	.....	.....	C-2a	.....
***Working Lamp**	.....	.....	.....	.....	C-2a	.....

Product: JCB 4 series Parts Manual
Full Download: https://www.arepairmanual.com/downloads/jcb-4-series-parts-manual/

C-1A ELECTRICS

ISSUE 3

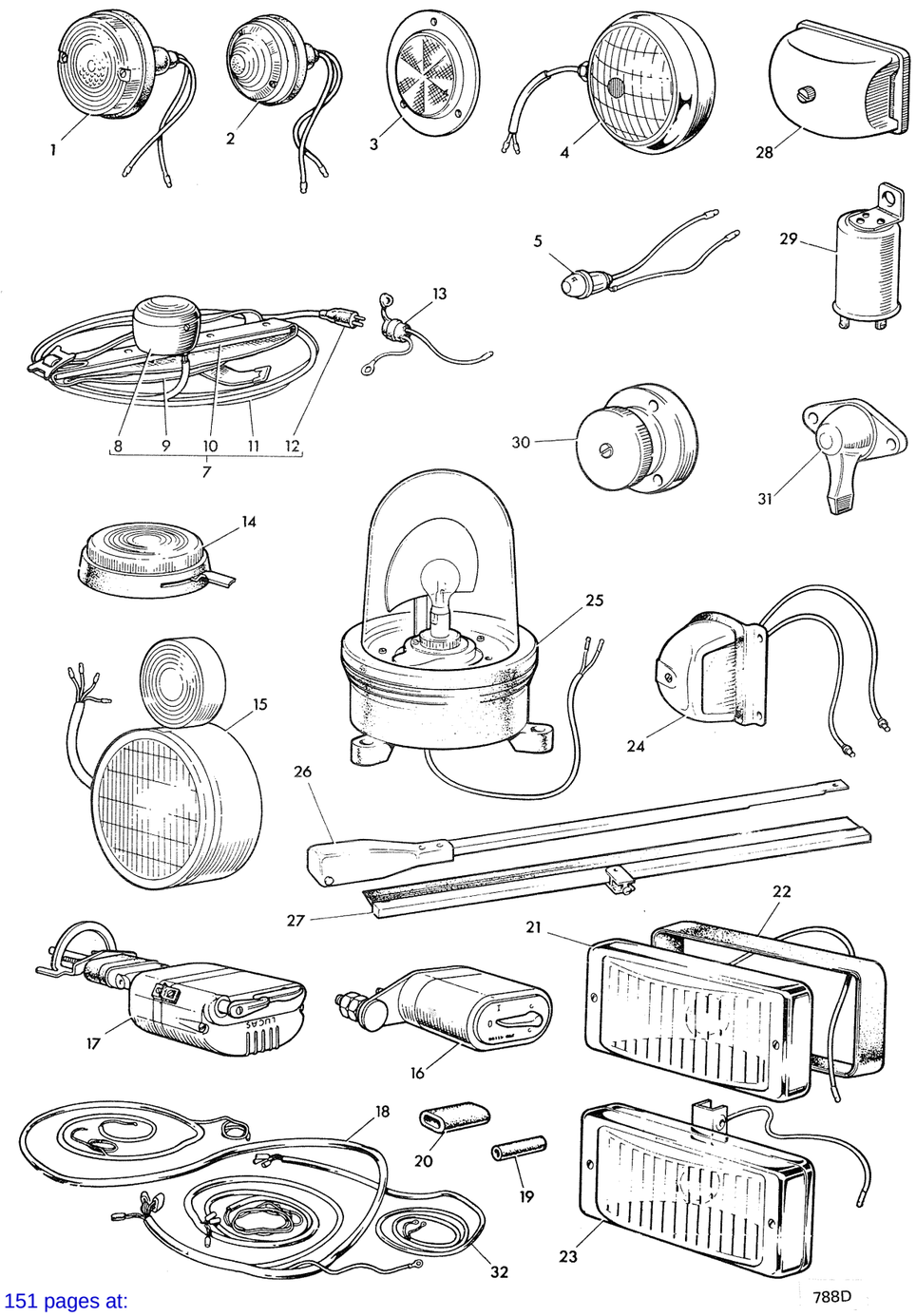

Item	Part No.	m/c No.	Description	Remarks	JCB 4	JCB 4C	JCB 4D
					Qty.		
1	703/00900	....	Rear Light	....	2	2	
	703/06700 703/13300	Superseded	Indicator Light	....			4
	703/06701	....	*:Lens–Indicator	....			1
	703/06703	....	*:Screw	....			2
2	703/06400 703/12700	Superseded	*Side Light	....			2
	703/06402 703/12701	To M52742	*:Lens	....			1
	720/10007	....	*:Bulb–12V–6W	....			1
	703/06405	....	*:Screw	....			2
	702/00200 703/12800	To M52742	Rear Light	....			
	703/12801	....	*:Lens	....			1
	720/10010	....	*:Bulb–12V–21/6W	....			1
3	103/40600	....	Reflector	....	2	2	2
5	703/01000	....	*Warning Light	Correction was 103/01000	1	1	1
7	103/40500 703/19500	No./Con.	*Travelling Light	....	1	1	1
8	103/40505 703/05700	Superseded	:Rear Light	....	1	1	1
9	103/40501	....	:Spring	....	1	1	1
10	103/40504	....	:Mounting Strip	....	1	1	1
11	703/06002	....	:Cable	....	1	1	1
12	703/06001	....	:Plug	....	1	1	1
13	703/06100	....	Socket	....	1	1	1
14	703/06800 703/15200	Superseded	Interior Light	....	1	1	1
	703/15201	....	*:Lens	....	1	1	1
	720/10009	....	*:Bulb	....	1	1	1
15	703/00700	....	Head Lamp & Flasher R.H.	....	1	1	
	703/00701	....	:Amber Lens	....	2	2	

Sample of manual. Download All 151 pages at:
https://www.arepairmanual.com/downloads/jcb-4-series-parts-manual/