Product: 2007 Bobcat V638 VersaHANDLER Service Repair Workshop Manual
Full Download: https://www.arepairmanual.com/downloads/2007-bobcat-v638-versahandler-service-repair-workshop-manual/

V638

Bobcat®

VersaHANDLER

Service Manual

S/N A2ZV11001 & Above (with Cab)
S/N A2ZW11001 & Above (with Canopy)

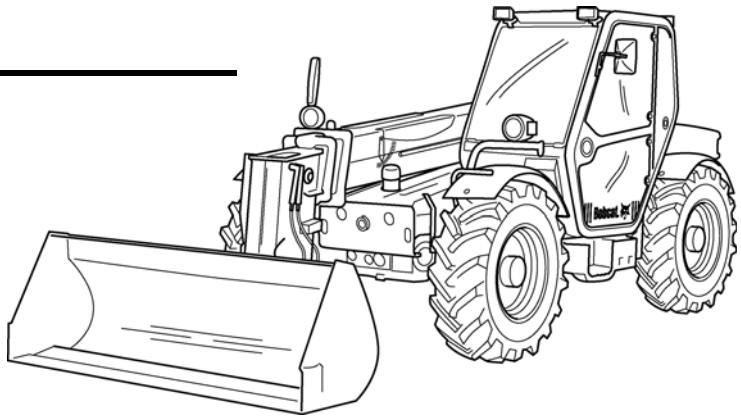

Sample of manual. Download All 842 pages at:
https://www.arepairmanual.com/downloads/200 . bobcat v638 versahandler-service-repair-workshop-manual/

6904755 (1-07) Printed in U.S.A. © Bobcat Company 2007

Product: 2007 Bobcat V638 VersaHANDLER Service Repair Workshop Manual
Full Download: https://www.arepairmanual.com/downloads/2007-bobcat-v638-versahandler-service-repair-workshop-manual/

Sample of manual. Download All 842 pages at:
https://www.arepairmanual.com/downloads/2007-bobcat-v638-versahandler-service-repair-workshop-manual/

MAINTENANCE SAFETY

WARNING

Instructions are necessary before operating or servicing machine. Read and understand the Operation & Maintenance Manual, Operator's Handbook and signs (decals) on machine. Follow warnings and instructions in the manuals when making repairs, adjustments or servicing. Check for correct function after adjustments, repairs or service. Untrained operators and failure to follow instructions can cause injury or death. **W-2003-0903**

CORRECT

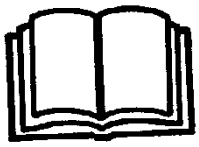

B-10731a

Never service the Bobcat VersaHANDLER without instructions.

Safety Alert Symbol: This symbol with a warning statement, means: "Warning, be alert! Your safety is involved!" Carefully read the message that follows.

CORRECT

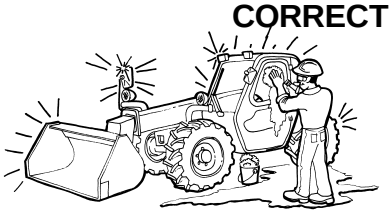

B-16082

Cleaning and maintenance are required daily.

WRONG

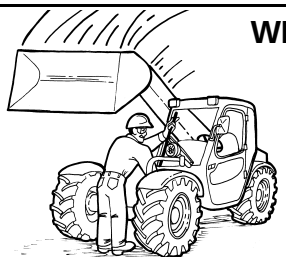

B-16080

Disconnecting or loosening any hydraulic tubeline, hose, fitting, component or a part failure can cause boom to drop. Do not go under boom when raised unless supported by an approved boom stop. Replace if damaged.

WRONG

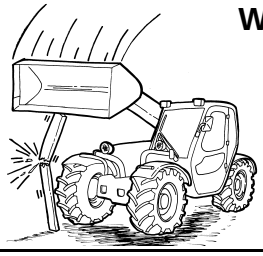

B-16079

Never work on VersaHANDLER with boom up unless boom is held by an approved boom stop. Replace if damaged.

Never modify equipment or add attachments not approved by Bobcat Company.

WRONG

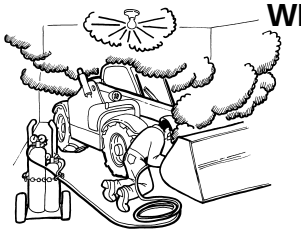

B-16081

Have good ventilation when welding or grinding painted parts.

Wear dust mask when grinding painted parts. Toxic dust and gas can be produced.

Avoid exhaust fume leaks which can kill without warning. Exhaust system must be tightly sealed.

WRONG

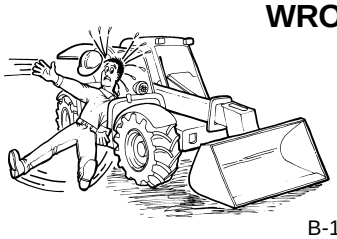

B-16078

Keep body, jewelry and clothing away from moving parts, electrical contact, hot parts and exhaust.

Wear eye protection to guard from battery acid, compressed springs, fluids under pressure and flying debris when engines are running or tools are used. Use eye protection approved for type of welding.

WRONG

B-6589

Lead-acid batteries produce flammable and explosive gases.

Keep arcs, sparks, flames and lighted tobacco away from batteries.

Batteries contain acid which burns eyes or skin on contact. Wear protective clothing. If acid contacts body, flush well with water. For eye contact flush well and get immediate medical attention.

Maintenance procedures which are given in the Operation & Maintenance Manual can be performed by the owner/operator without any specific technical training. Maintenance procedures which are **not** in the Operation & Maintenance Manual must be performed **ONLY BY QUALIFIED BOBCAT SERVICE PERSONNEL. Always use genuine Bobcat replacement parts.**

MSW12-0805

Bobcat®

ALPHABETICAL INDEX

ACCUMULATOR 20-01
AIR CLEANER 70-01
AIR CLEANER SERVICE 10-01
AIR CONDITIONING SERVICE 80-01
AIR CONDITIONING SYSTEM FLOW 80-01
AIR INTAKE COWLING 50-01
ALTERNATOR 60-01
APPROVED BOOM STOP 10-01
ATTACHMENT FRAME 10-01
AXLES (FRONT AND REAR) 10-01
AXLE AND DIFFERENTIAL (FRONT) 40-01
AXLE AND DIFFERENTIAL (REAR) 40-01
AXLE TOE-IN 40-01

BASIC TROUBLESHOOTING 80-01
BATTERY 60-01
BOOM TRAY 50-01
BRAKE LIGHT SWITCH 60-01
BRAKE VALVE 20-01
BUCKET POSITION CYLINDER 20-01

CANOPY 50-01
CHAIN CHECKING AND ADJUSTING PROCEDURE 10-01, 50-01
COMPONENTS 80-01
COMPRESSOR 80-01
CONDENSER 80-01
CONVERSIONS SPEC-01

DASH COVER/STEERING COLUMN COVER 50-01
DRIVE BOX 20-01
DRIVESHAFT 40-01

ELECTRICAL SYSTEM INFORMATION 60-01
END BOOM 50-01
ENGINE AND ENGINE MOUNTS 70-01
ENGINE COMPONENTS AND TESTING 70-01
ENGINE COOLING SYSTEM 10-01
ENGINE COVER 10-01, 50-01
ENGINE/HYDROSTAT ASSEMBLY 70-01
ENGINE LUBRICATION SYSTEM 10-01
ENGINE SPECIFICATIONS SPEC-01
ENGINE SPEED CONTROL 70-01
ENGINE TIMING 70-01
EVAPORATOR/BLOWER UNIT 80-01
EXPANSION VALVE 80-01
EXTENSION CYLINDER 20-01

FAN MOTOR 20-01
FENDER 50-01
FIXED BOOM 50-01
FLOW CONTROL VALVE 20-01
FRAME LEVELING CYLINDER 20-01
FRAME LEVELING SPEED SWITCH 60-01
FLYWHEEL AND HOUSING 70-01
FRONT AXLE 40-01
FRONT WIPER MOTOR 60-01

FUEL SYSTEM 10-01
FUEL TANK 50-01

GEAR PUMP 20-01
GENERAL AIR CONDITIONING SERVICE GUIDELINES 80-01

HEATER ASSEMBLY 80-01
HYDRAULIC CONNECTION SPECS SPEC-01
HYDRAULIC CONTROL VALVE 20-01
HYDRAULIC RESERVOIR 20-01
HYDRAULIC / HYDROSTATIC FLUID SPECIFICATIONS SPEC-01
HYDRAULIC / HYDROSTATIC SYSTEM 10-01
HYDRAULIC SYSTEM INFORMATION 20-01
HYDROSTATIC DRIVE MOTOR 30-01
HYDROSTATIC PUMP 30-01
HYDROSTATIC SYSTEM INFORMATION 30-01

INCHING SWITCH 60-01
INSTRUMENT PANEL 60-01
INTERMEDIATE BOOM 50-01

JOYSTICK 20-01
JOYSTICK PANEL 50-01

LATERAL OPERATOR RESTRAINT SYSTEM (LORS) 10-01, 60-01
LIFT CYLINDER 20-01
LIFTING AND BLOCKING THE VERSAHANDLER 10-01
LIGHTS 60-01
LUBRICATION 10-01

MACHINE TORQUE SPECIFICATIONS SPEC-01
MAIN RELIEF VALVE 20-01
MUFFLER 70-01
OIL COOLER/RADIATOR 30-01, 70-01
OPERATOR CAB 50-01
OPERATOR CAB/CANOPY 10-01
OPERATOR SEAT 50-01

PARKING BRAKE 20-01, 40-01
PEDAL ASSEMBLY 60-01
PIVOT LINK 50-01
PORT RELIEF VALVES 20-01
PRESSURE SWITCH 80-01
PRESSURE REDUCING VALVE 20-01

QUICK-TACH 50-01
QUICK TACH CYLINDER 20-01

ALPHABETICAL INDEX (CONT'D)

REAR AXLE 40-01
REAR WEIGHTS 50-01
REAR WIPER MOTOR.....60-01
RECEIVER / DRIER 80-01
RECONDITIONING THE ENGINE 70-01
REGULAR MAINTENANCE 80-01

SAFETY..... 80-01
SERVICE BRAKE..... 40-01
SERVICE SCHEDULE 10-01
SERVICE SOFTWARE.....60-01
SPARK ARRESTOR MUFFLER..... 10-01
STARTER.....60-01
STEERING ANGLE ADJUSTMENT.....40-01
STEERING CYLINDER (FRONT) 20-01
STEERING CYLINDER (REAR).....20-01
STEERING MODE VALVE BLOCK.....20-01
STEERING VALVE.....20-01
SWITCH PANEL.....60-01
SYSTEM CHARGING AND RECLAMATION..... 80-01
SYSTEM TROUBLESHOOTING CHART 80-01

TEMPERATURE/PRESSURE.....80-01
TILT CYLINDER 20-01
TIRE MAINTENANCE 10-01
TOP WIPER MOTOR 60-01
TORQUE SPECIFICATIONS FOR BOLTS ... SPEC-01
TOW VALVE.....20-01
TOWING THE VERSAHANDLER 10-01
TRANSPORTING THE VERSAHANDLER.....10-01
TRAVEL/SIGNAL LEVER.....60-01
TROUBLESHOOTING.....40-01, 70-01

VERSAHANDLER SPECIFICATIONS SPEC-01

WEAR PADS (FRONT) 50-01
WEAR PADS (REAR).....50-01

CONTENTS

DELIVERY REPORT X

FOREWORD III

SAFETY INSTRUCTIONS V

SERIAL NUMBER LOCATION IX

BOBCAT VERSAHANDLER IDENTIFICATION XI

SAFETY AND MAINTENANCE 10-01

HYDRAULIC SYSTEM 20-01

HYDROSTATIC SYSTEM 30-01

DRIVE SYSTEM 40-01

MAIN FRAME 50-01

ELECTRICAL SYSTEM AND ANALYSIS 60-01

ENGINE SERVICE 70-01

HEATING, VENTILATION, AIR CONDITIONING 80-01

SPECIFICATIONS SPEC-01

Bobcat®

FOREWORD

This manual is for the Bobcat VersaHANDLER mechanic. It provides necessary servicing and adjustment procedures for the Bobcat VersaHANDLER and its component parts and systems. Refer to the Operation & Maintenance Manual for operating instructions, starting procedure, daily checks, etc.

A general inspection of the following items must be made after the VersaHANDLER has had service or repair:

1. Check that ROPS/FOPS (Including right side window) is in good condition and is not modified.

2. Check that ROPS mounting hardware is tightened and is Bobcat approved.

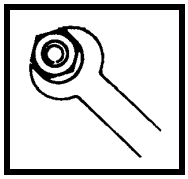

3. The seat belt must be correctly installed, functional and in good condition.

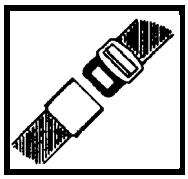

4. Check boom support device, replace if damaged.

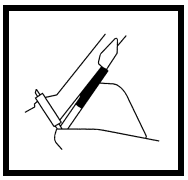

5. Machine signs must be legible and in the correct location.

6. Check tires for wear and pressure. Use only approved tires.

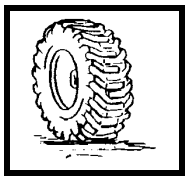

7. Check for correct function of the work lights.

8. The parking brake must function correctly.

9. Enclosure door latches must open and close freely.

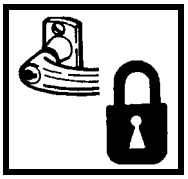

10. Attachment locking pins must function correctly and be in good condition.

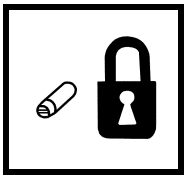

11. Safety treads must be in good condition.

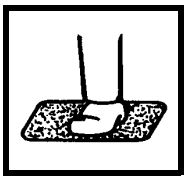

12. Check for correct function of indicator lamps and gauges.

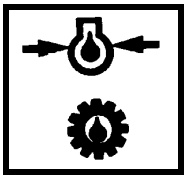

13. Check hydraulic fluid level, engine oil level and fuel supply.

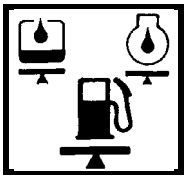

14. Inspect for fuel, oil or hydraulic fluid leaks.

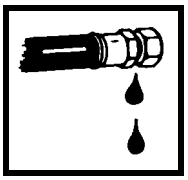

15. Lubricate the VersaHANDLER.

16. Check the condition of the battery and cables.

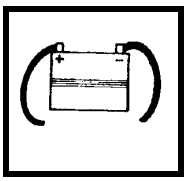

17. Inspect the air cleaner for damage or leaks. Check the condition of the element.

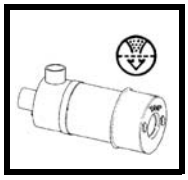

18. Check the electrical charging system.

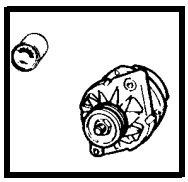

19. Inspect for loose or broken parts or connections.

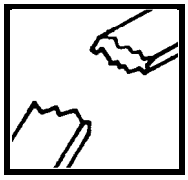

20. Operate the VersaHANDLER and check all functions.

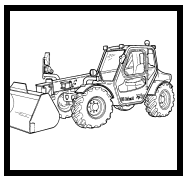

21. Check for any field modification not completed.

22. Recommend to the owner that all necessary corrections be made before the machine is returned to service.

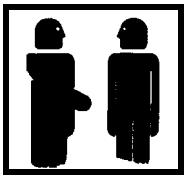

SAFETY INSTRUCTIONS

Safety Alert Symbol

This symbol with a warning statement means: "Warning, be alert! Your safety is involved!" Carefully read the message that follows.

WARNING

Instructions are necessary before operating or servicing machine. Read and understand the Operation & Maintenance Manual, Operator's Handbook and signs (decals) on machine. Follow warnings and instructions in the manuals when making repairs, adjustments or servicing. Check for correct function after adjustments, repairs or service. Untrained operators and failure to follow instructions can cause injury or death.

W-2003-0903

WARNING

Warnings on the machine and in the manuals are for your safety. Failure to obey warnings can cause injury or death.

W-2044-1285

IMPORTANT

This notice identifies procedures which must be followed to avoid damage to the machine.

I-2019-0284

The following publications provide information on the safe use and maintenance of the Bobcat machine and attachments:

- The Delivery Report is used to assure that complete instructions have been given to the new owner and that the machine is in safe operating condition.
- The Operation & Maintenance Manual delivered with the machine or attachment contains operating information as well as routine maintenance and service procedures. It is a part of the machine and can be stored in a container provided on the machine. Replacement Operation & Maintenance Manuals can be ordered from your Bobcat dealer.
- Machine signs (decals) instruct on the safe operation and care of your Bobcat machine or attachment. The signs and their locations are shown in the Operation & Maintenance Manual. Replacement signs are available from your Bobcat dealer.
- An Operator's Handbook fastened to the operator cab. It's brief instructions are convenient to the operator. The handbook is available from your dealer in an English edition or one of many other languages. See your Bobcat dealer for more information on translated versions.
- The AEM Safety Manual delivered with the machine gives general safety information.
- The Service Manual and Parts Manual are available from your dealer for use by mechanics to do shop-type service and repair work.
- The VersaHANDLER Operator Training Course is available through your local dealer or at **www.training.bobcat.com** or **www.bobcat.com**. This course is intended to provide rules and practices of correct operation of the VersaHANDLER.
- The VersaHANDLER Safety Video is available from your Bobcat dealer or at **www.training.bobcat.com** or **www.bobcat.com**.

The dealer and owner/operator review the recommended uses of the product when delivered. If the owner/operator will be using the machine for a different application(s) he or she must ask the dealer for recommendations on the new use.

Call Before You Dig

1-888-258-0808

When you call, you will be directed to a location in your state/city for information about buried lines (telephone, cable TV, water, sewer, gas, etc.)

SAFETY INSTRUCTIONS (CONT'D)

Fire Prevention

The machine and attachments have components that are at high temperature under normal operating conditions. The primary source of high temperatures is the engine and exhaust system. The electrical system, if damaged or incorrectly maintained, can be a source of arcs or sparks.

Flammable debris (leaves, straw, etc.) must be removed regularly. If flammable debris is allowed to accumulate, it will increase fire hazard. Clean often to avoid this accumulation. Flammable debris in the engine compartment is a potential hazard.

The spark arrestor muffler is designed to control the emission of hot particles from the engine and exhaust system, but the muffler and the exhaust gases are still hot.

- Do not use the machine where exhaust, arcs, sparks or hot components can contact flammable material, explosive dust or gases.
- The operator cab, engine compartment, and engine cooling system must be inspected every day and cleaned if necessary to prevent fire hazard and overheating.
- Check all electrical wiring and connections for damage. Keep the battery terminals clean and tight. Repair or replace any damaged part.
- Check fuel and hydraulic tubes, hoses and fittings for damage and leakage. Never use open flame or bare skin to check for leaks. Tighten or replace any parts that show leakage. Always clean fluid spills. Do not use gasoline or diesel fuel for cleaning parts. Use commercial nonflammable solvents.
- Do not use ether or starting fluids on any engine which has glow plugs. These starting aids can cause explosion and injure you or bystanders.
- Always clean the machine, disconnect the battery, and disconnect the wiring from the controllers before welding. Cover rubber hoses, battery and all other flammable parts. Keep a fire extinguisher near the machine when welding. Have good ventilation when grinding or welding painted parts. Wear a dust mask when grinding painted parts. Toxic dust or gas can be produced.
- Stop the engine and let it cool before adding fuel. NO SMOKING!
- Use the procedure in the Operation & Maintenance Manual for connecting the battery and for jump starting.
- Use the procedure in the Operation & Maintenance Manual for cleaning the spark arrestor muffler (if equipped).

Figure 1

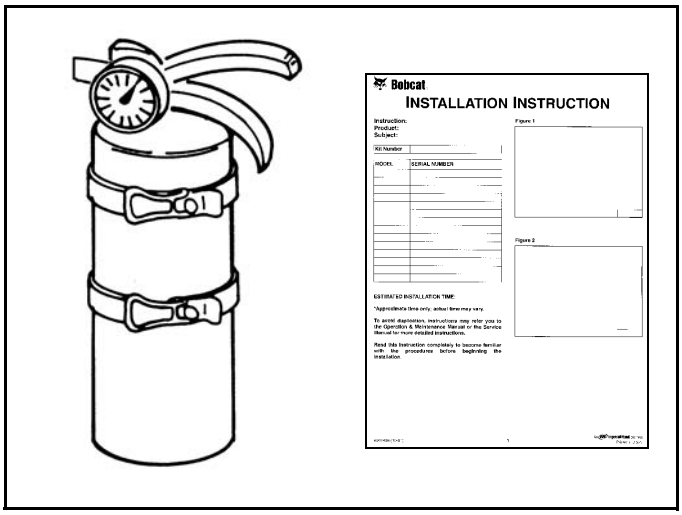

- Know where fire extinguishers and first aid kits are located and how to use them. Fire extinguishers are available from your Bobcat dealer **[Figure 1]**.

SERIAL NUMBER LOCATION

Always use the serial number of the VersaHANDLER when requesting service information or when ordering parts. Early or later models (identification made by serial number) may use different parts, or it may be necessary to use a different procedure in doing a specific service operation.

VersaHANDLER Serial Number

Figure 2

The front, on the right side of the chassis **[Figure 2]**.

Engine Serial Number

Figure 3

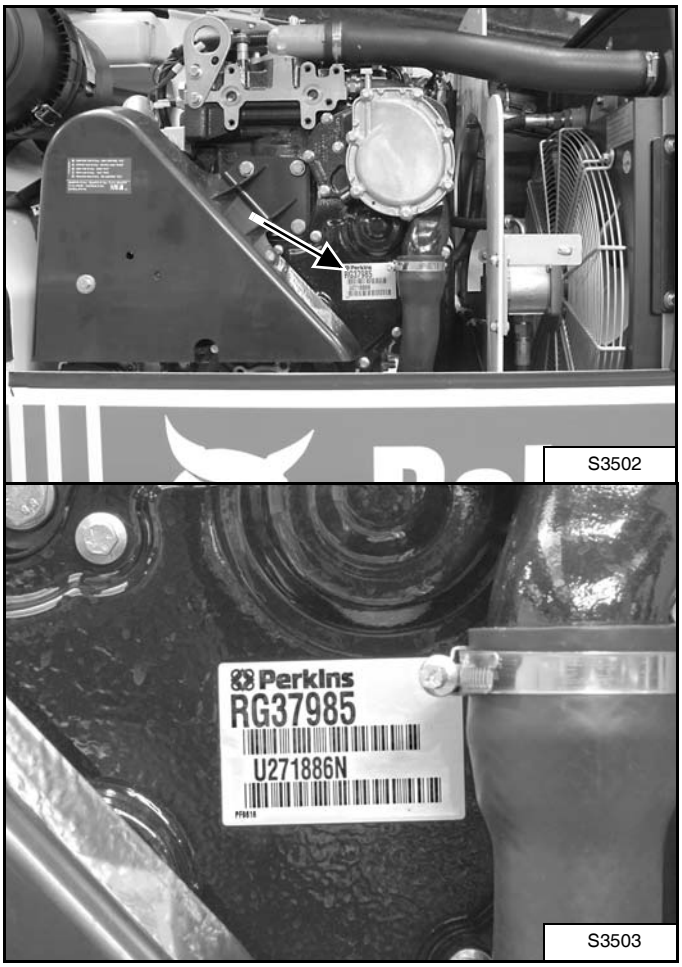

The engine serial number is stamped on a plate near the injection pump or at the rear of the cylinder block **[Figure 3]**. Always use the full number when ordering replacement parts.

Other Serial Numbers

Some components may also have serial numbers. Always use these serial numbers when requesting parts.

DELIVERY REPORT

Figure 4

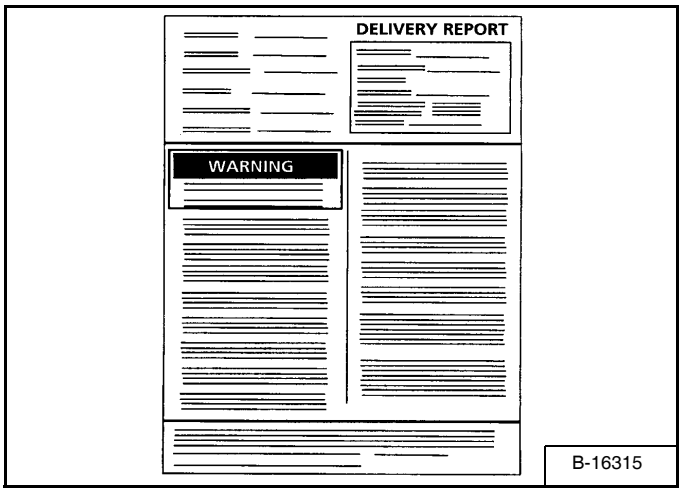

The Delivery Report must be filled out by the dealer and signed by the owner or operator when the VersaHANDLER is delivered. An explanation of the form must be given to the owner. Make sure it is filled out completely **[Figure 4]**.

BOBCAT VERSAHANDLER IDENTIFICATION

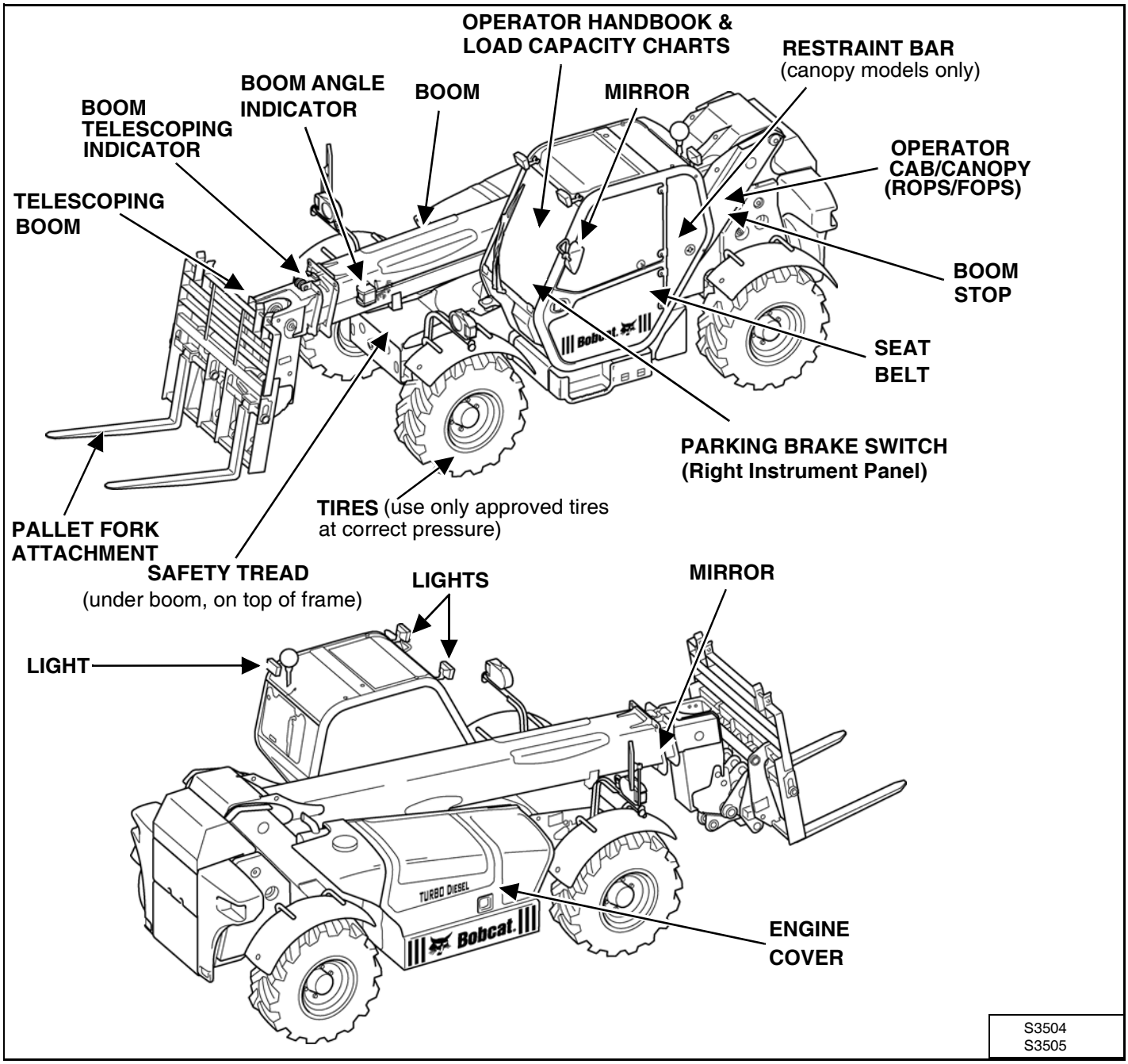

Bobcat®

SAFETY AND MAINTENANCE

AIR CLEANER SERVICE 10-60-1
Replacing Filter Element 10-60-1

APPROVED BOOM STOP 10-150-1
Installing The Approved Boom Stop 10-150-1
Removing The Approved Boom Stop 10-150-1

ATTACHMENT FRAME 10-150-5
Inspection And Maintenance 10-150-5

AXLES (FRONT AND REAR) 10-110-1
Checking Oil Level (Front Differential) 10-110-2
Checking Oil Level (Planetary Carrier) 10-110-1
Checking Oil Level (Rear Differential) 10-110-2
Draining Oil (Front Differential) 10-110-3
Draining Oil (Planetary Carrier) 10-110-1

CHAIN CHECKING AND ADJUSTING PROCEDURE 10-180-1
Checking/Adjustment Procedure 10-180-1
Extend/Retract Chain Wear Check 10-180-2

ENGINE COOLING SYSTEM 10-70-1
Checking The Coolant Level 10-70-1
Cleaning The Cooling System 10-70-1
Replacing The Coolant 10-70-2

ENGINE COVER. 10-160-1
Opening And Closing The Engine Cover 10-160-1

ENGINE LUBRICATION SYSTEM 10-90-1
Checking Engine Oil 10-90-1
Oil Chart. 10-90-1
Replacing Oil And Filter 10-90-2

FUEL SYSTEM 10-80-1
Filling The Fuel Tank 10-80-1
Fuel Filter 10-80-1
Fuel Specifications. 10-80-1

Continued On Next Page

HYDRAULIC/HYDROSTATIC SYSTEM 10-100-1
Checking And Adding Fluid 10-100-1
Replacing Hydraulic Fluid 10-100-2
Replacing Hydraulic/Hydrostatic Filter 10-100-1

LATERAL OPERATOR RESTRAINT SYSTEM (LORS™) . . 10-170-1
System Inspection 10-170-1
System Maintenance 10-170-2

LIFTING AND BLOCKING THE VERSAHANDLER 10-10-1
Procedure 10-10-1

LUBRICATION 10-120-1
Procedure 10-120-1

OPERATOR CAB/CANOPY 10-20-1
Cab Door 10-20-2
Cab Door Window 10-20-2
Emergency Exit 10-20-1

SERVICE SCHEDULE 10-50-1

SPARK ARRESTOR MUFFLER 10-140-1
Cleaning 10-140-1

TIRE MAINTENANCE 10-130-1
Tire Mounting 10-130-2
Tire Rotation 10-130-2
Wheel Nuts 10-130-1

TOWING THE VERSAHANDLER 10-40-1
Procedure 10-40-1

TRANSPORTING THE VERSAHANDLER 10-30-1
Procedure 10-30-1

LIFTING AND BLOCKING THE VERSAHANDLER

Procedure

WARNING

AVOID INJURY OR DEATH

- **Before lifting, check fasteners on four point lift.**
- **Never allow riders in the cab or bystanders within 15 ft. (5 m) while lifting the machine.**

W-2160-0694

Figure 10-10-1

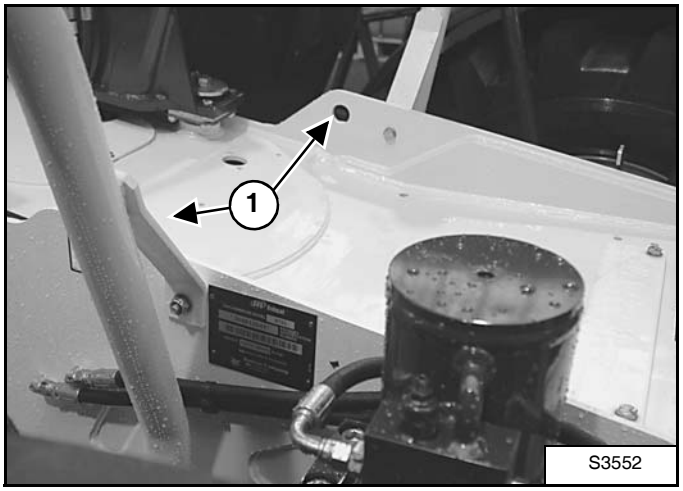

Figure 10-10-2

Before lifting: Remove all attachments, lower boom fully, position wheels straight forward and stop the machine.

Attach the lift hooks to the following lifting points (Items 1) **[Figure 10-10-2]** & **[Figure 10-10-2]**:

Figure 10-10-3

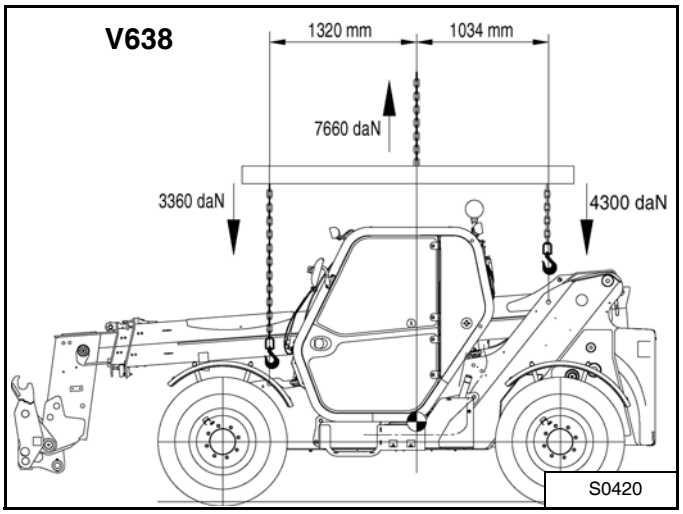

Figure 10-10-4

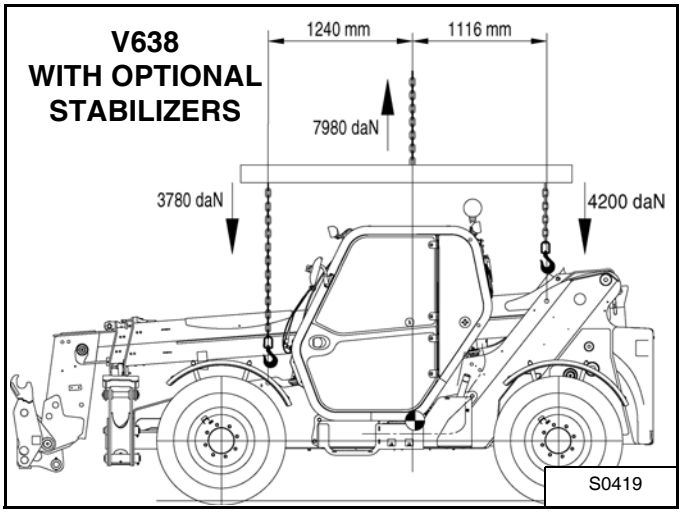

Take into account the position of the machine's center of gravity & **[Figure 10-10-4]**.

OPERATOR CAB/CANOPY

Figure 10-20-1

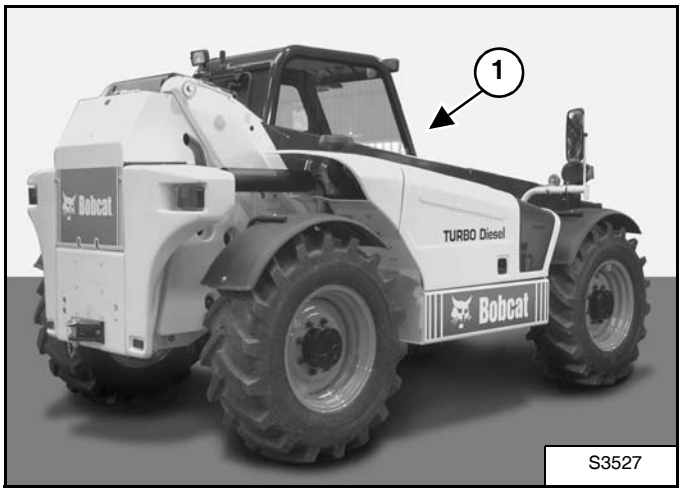

The VersaHANDLER has an operator cab or canopy (ROPS and FOPS) (Item 1) **[Figure 10-20-1]** to protect the operator from rollover and falling objects. Check with your dealer if the operator cab or canopy has been damaged. Never operate without right window. The seat belt must be worn for roll over protection.

ROPS/FOPS - Roll Over Protective Structure per SAE J1040 and ISO 3471, and Falling Object Protective Structure per SAE J1043 and ISO 3449 (FOPS Level II).

WARNING

Never modify operator cab or canopy by welding, grinding, drilling holes or adding attachments unless instructed to do so by Bobcat. Do not operate without right window. Changes to the cab or canopy can cause loss of operator protection from rollover and falling objects, and result in serious injury or death.

W-2396-1202

Emergency Exit

Figure 10-20-2

Turn the handle (Inset) **[Figure 10-20-2]** and push the rear window open. (Models with enclosed cab only.) Exit through the rear window opening **[Figure 10-20-2]**.

Cab Door

Figure 10-20-3

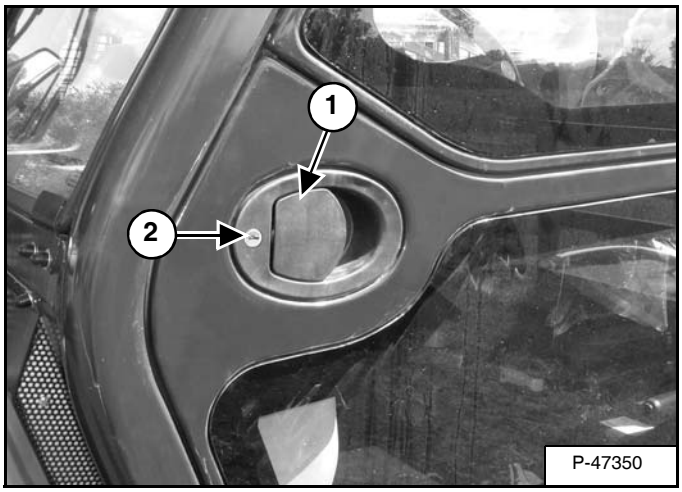

Figure 10-20-4

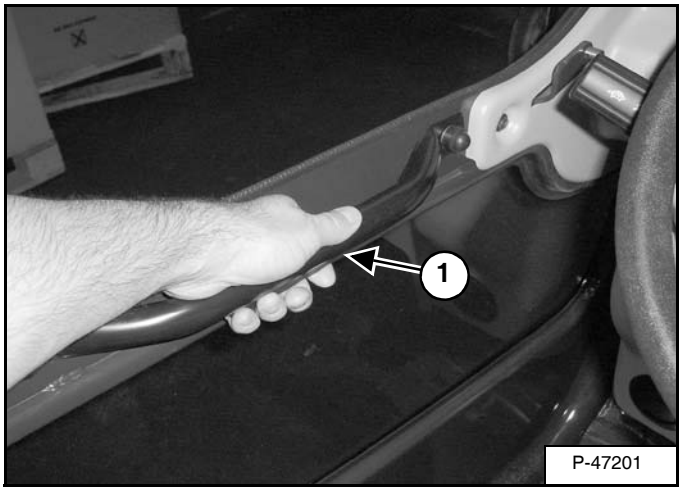

The cab door can be opened from the outside of the cab using the latch (Item 1) **[Figure 10-20-3]** and open from the inside of the cab when you squeeze the latch (Item 1) **[Figure 10-20-4]**.

The cab door can be locked (Item 2) **[Figure 10-20-3]** with the start key.

Cab Door Window

Figure 10-20-5

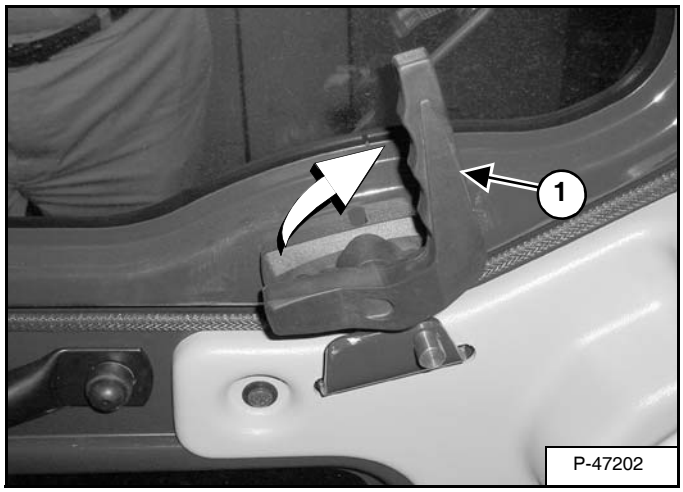

Turn the handle (Item 1) **[Figure 10-20-5]**. Push open the window fully until it latches against the cab.

Figure 10-20-6

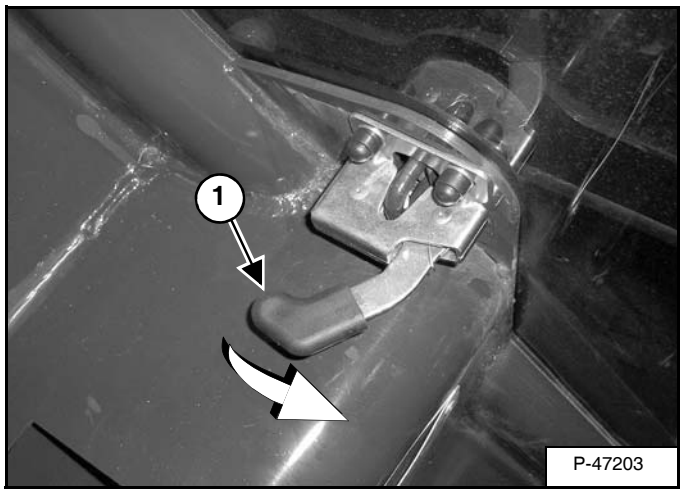

Pull the lever (Item 1) **[Figure 10-20-6]** inside the cab to disengage the latch and close the window.

TRANSPORTING THE VERSAHANDLER

Procedure

Always drive the VersaHANDLER backwards (heavy end up) onto the transport vehicle.

Figure 10-30-1

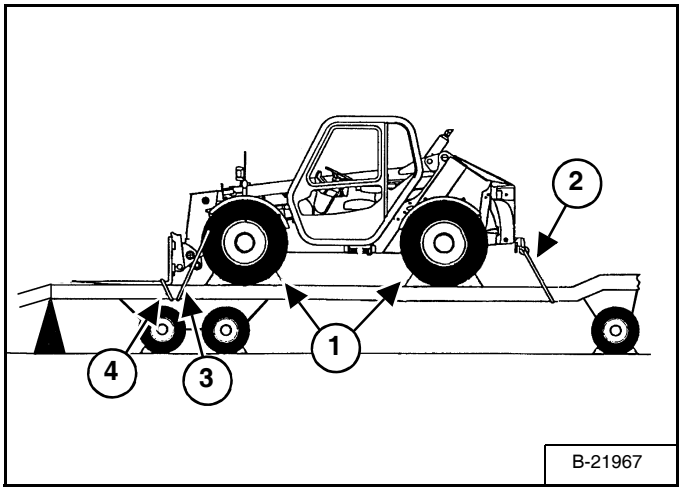

The rear of the trailer must be blocked or supported **[Figure 10-30-1]** when loading or unloading the VersaHANDLER to prevent the front end of the trailer from raising up.

Be sure the transport and towing vehicles are of adequate size and capacity. For weight of the VersaHANDLER. (See VersaHANDLER SPECIFICATIONS on Page SPEC-10-1.)

Fasten the VersaHANDLER to the transport vehicle to prevent it from moving during sudden stops or when going up or down slopes.

- Block the wheels (Item 1) **[Figure 10-30-1]**.
- Fasten the machine frame to the transport vehicle (Items 2 & 3) **[Figure 10-30-1]**.
- Attach the forks or bucket attachment to the transport vehicle (Item 4) **[Figure 10-30-1]**.

⚠ WARNING

Adequately designed ramps of sufficient strength are needed to support the weight of the machine when loading onto a transport vehicle. Wood ramps can break and cause personal injury.

W-2058-0494

Bobcat®

TOWING THE VERSAHANDLER

Procedure

The VersaHANDLER can be towed a short distance such as removing it from mud or loading onto a transport vehicle.

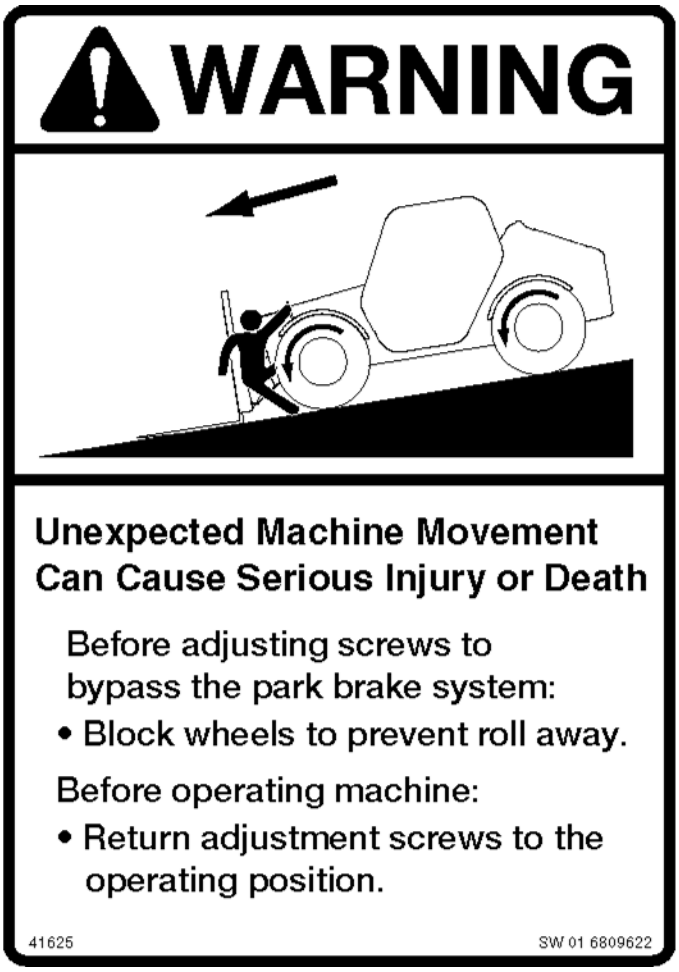

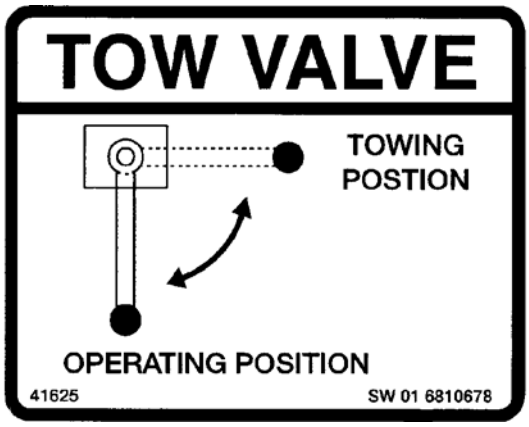

Block the wheels to prevent the machine from rolling.

Figure 10-40-1

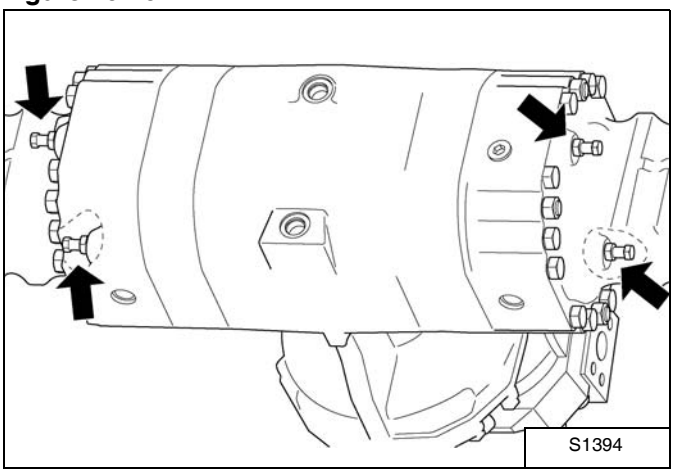

Releasing Brake Disks: To release the brake disks, turn each of the four screws **[Figure 10-40-1]** in only one half turn at a time; then repeat until all four screws are all the way in. (It will take 4-1/2 to 5 turns to fully release the brakes.) Record the number of turns so that you can return them to the same position later.

NOTE: This procedure is required on the front axle only.

Procedure (Cont'd)

Figure 10-40-2

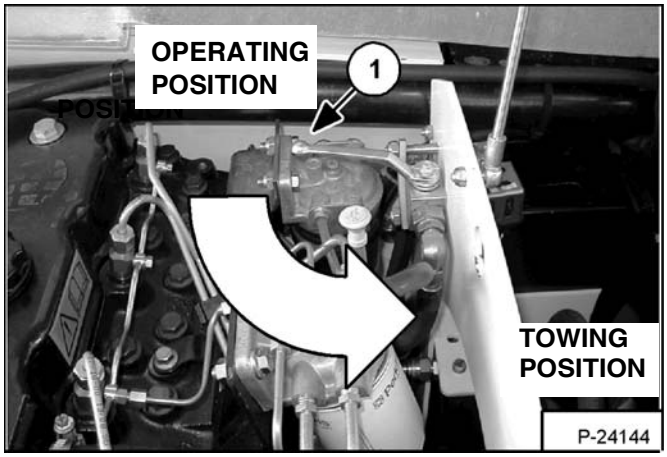

Raise the engine cover.

Turn the tow valve counterclockwise 90° (Item 1) **[Figure 10-40-2]** to TOWING POSITION.

Tow the VersaHANDLER at slow speed.

Engaging Brake Disks: After towing is completed, turn the tow valve (Item 1) **[Figure 10-40-2]** clockwise 90° to the OPERATING POSITION.

Turn all four screws out, 1/2 turn at a time, to their original position.

SERVICE SCHEDULE

Maintenance work must be done at regular intervals. Failure to do so will result in excessive wear and early failures. The service schedule is a guide for correct maintenance of the Bobcat VersaHANDLER.

WARNING

Instructions are necessary before operating or servicing machine. Read and understand the Operation & Maintenance Manual, Operator's Handbook and signs (decals) on machine. Follow warnings and instructions in the manuals when making repairs, adjustments or servicing. Check for correct function after adjustments, repairs or service. Untrained operators and failure to follow instructions can cause injury or death.

W-2003-0903

SERVICE SCHEDULE		HOURS					
ITEM	**SERVICE REQUIRED**	**10**	**50**	**100**	**250**	**500**	**■ 1000**
Engine Oil	Check the oil level and add oil as needed.	■					
Hydraulic Fluid	Check fluid level and add as needed.	■					
Articulation Pins	Lubricate with multi-purpose lithium based grease.	■					
Safety Signs, Safety Tread and Mirrors	Check for damaged signs (decals), safety tread and mirrors. Replace if damaged or worn.	■					
Fuel Filter	Clean the sediment bowl/water trap.	■					
Nuts & Bolts	Check for loose nuts and bolts. Tighten as needed.	■					
Seat Belt and Restraint Bar (if equipped)	Check the condition of the seat belt. Check the Restraint Bar (if equipped). Clean dirt and debris from moving parts.	■					
Brakes	Check for function. Service as necessary.	■					
Back-up Alarm	Check for function. Replace as necessary.	■					
Lateral Operator Restraint System (if equipped)	Check that hydraulic and drive functions are deactivated when the restraint bar is raised. check indicator light on center instrument panel. See details in this Operation & Maintenance Manual.	■					
Tires	Check for wear or damage. Inflate to correct pressure. Be sure all tires are inflated to the same pressure. Use only approved tires.	■					
Engine Air Filter And Air System	Check condition indicator, replace element when required and empty dust cup as needed. Check air system for leaks.	■					
Engine Cooling System	Clean debris from oil cooler, radiator and air conditioner condenser. check coolant level cold in reservoir. Add premixed coolant as needed (See ENGINE COOLING SYSTEM on page 10-70-1	■					
King Pins, Axle Oscillation (Front/ Rear), Attach. Frame Pivot(s), Tilt/ Lift Cyl., Boom Pivot, Leveling Cyl.	Lubricate with multi-purpose lithium based grease.		■				
Telescopic Boom Slide	Lubricate with multi-purpose lithium based grease. Check wear blocks for adjustment or replacement.		■				
Hydraulic Hoses, Tubelines & Connections	Check condition of hoses, tubelines and connectors. Repair or replace as needed.		■				
Battery	Check electrolyte level. Add distilled water as needed.			■			
Wheel Nuts	Check wheel nut torque. Tighten as needed [221 ft.-lb. (300 N•m)].	†		■			
Boom Chain	Check and apply chain lubricant as needed. Check chain tension and wear. Adjust or replace as necessary.				■		
Restraint Bar Spring Pivot	Lubricate with multi-purpose lithium based grease.				■		
Alt. & Air Cond Belt (if equipped)	Check belt tension and adjust as needed.		●		■		
Engine Oil and Filter	Replace the engine oil and filter. See SPECIFICATIONS Page SPEC-01 for correct capacity. Use a genuine Bobcat filter.		●			■	
Engine Air Filter	Replace the outer filter element. Use a genuine Bobcat filter.		●			■	
Fuel Filter	Replace the fuel filter element. Use a genuine Bobcat filter.		●			■	
Hydraulic Fluid Filter	Replace the hydraulic filter element. Use a genuine Bobcat filter.		●			■	
Hydrostatic Fluid Filter	Replace the hydraulic filter element. Use a genuine Bobcat filter.		●			■	
Hydraulic Fluid and Filter	Replace the hydraulic fluid and filter element. See SPECIFICATIONS.						■
Front & Rear Axle Fluid	Replace the axle fluid. See SPECIFICATIONS.			♦		◊	■
Engine Coolant	Check freeze protection of antifreeze -34 F (-30 C). Flush cooling system and replace with premixed coolant (See ENGINE COOLING SYSTEM on page 10-70-1).						■
Telescopic Boom Wear Blocks	Check for wear and adjust as needed. Replace as necessary.						■
Pivot Pins and Bushings	Check for wear on the pivot pins and bushings.						■
Stabilizers (If Equipped): Cylinders and pivots	Lubricate with multi-purpose lithium based grease.						■

† **Check wheel nut torque every 8 hours for the first 24 hours.**
● **Perform service first time, then as indicated in chart.**
♦ **Check level.**
◊ **Replace fluid first time, then as indicated in chart.**
❑ **Or every 6 months**
■ **Or every 12 months**

Product: 2007 Bobcat V638 VersaHANDLER Service Repair Workshop Manual
Full Download: https://www.arepairmanual.com/downloads/2007-bobcat-v638-versahandler-service-repair-workshop-manual/

Bobcat®

Sample of manual. Download All 842 pages at:
https://www.arepairmanual.com/downloads/2007-bobcat-v638-versahandler-service-repair-workshop-manual/