Product: Bobcat Backhoe Service Repair Workshop Manual
Full Download: https://www.arepairmanual.com/downloads/bobcat-backhoe-service-repair-workshop-manual-2/

Bobcat®

Service Manual
Backhoe

(Bob-Tach Mounted) S/N 074600101 & Above

(406) S/N 631010000 & Below
(406) S/N 631010001 & Above
(506) S/N 631110000 & Below
(506) S/N 631110001 & Above
(607) S/N 775002278 & Above
(607) S/N A5CW00101 & Above
(709) S/N 270007245 & Above
(709) S/N A54M00101 & Above
(709FDS) S/N 584101444 & Above
(709FDS) S/N A5F300101 & Above
(8811) S/N 630100101 & Above
(8811) S/N A55800101 & Above
(MO6) S/N 631200101 & Above

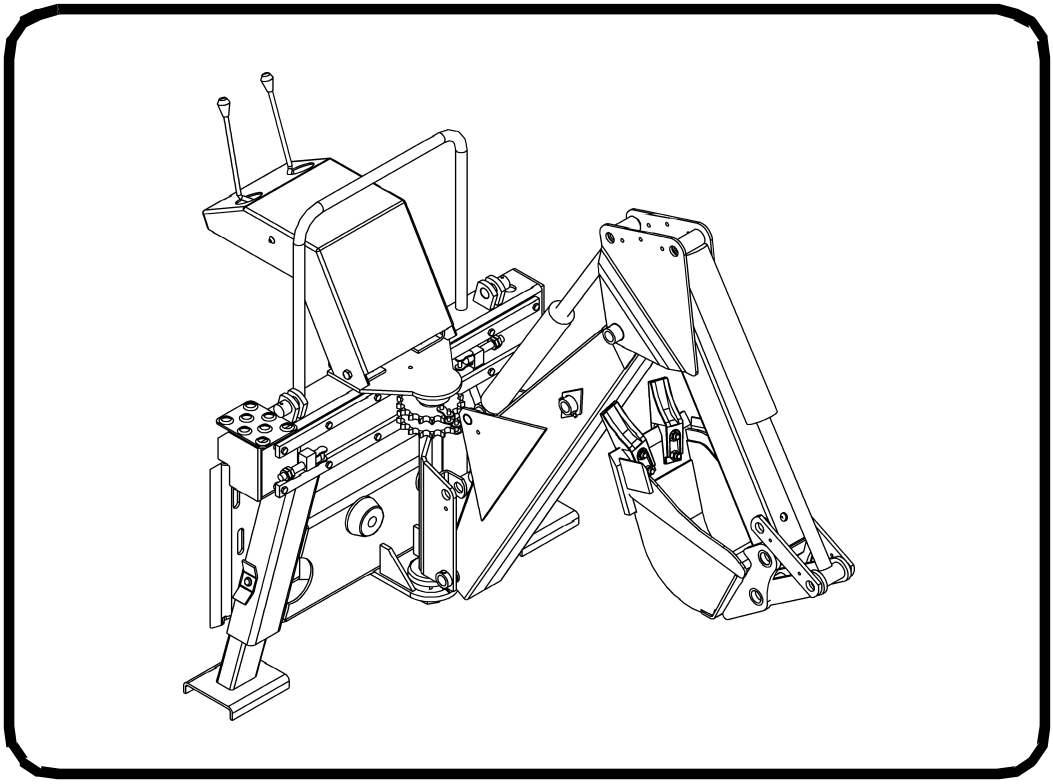

Sample of manual. Download All 350 pages at:
https://www.arepairmanual.com/downloads/bobcat-backhoe-service-repair-workshop-manual-2/

6904107 (8-08) Printed in U.S.A.
© Bobcat Company 2008

Product: Bobcat Backhoe Service Repair Workshop Manual
Full Download: https://www.arepairmanual.com/downloads/bobcat-backhoe-servi
ce-repair-workshop-manual-2/

Sample of manual. Download All 350 pages at:
https://www.arepairmanual.com/downloads/bobcat-backhoe-service-repair-workshop-manual-2/

MAINTENANCE SAFETY

WARNING

Instructions are necessary before operating or servicing machine. Read and understand the Operation & Maintenance Manual, Operator's Handbook and signs (decals) on machine. Follow warnings and instructions in the manuals when making repairs, adjustments or servicing. Check for correct function after adjustments, repairs or service. Untrained operators and failure to follow instructions can cause injury or death.

W-2003-0903

Safety Alert Symbol: This symbol with a warning statement, means: "Warning, be alert! Your safety is involved!" Carefully read the message that follows.

CORRECT

B-10731a

- **Never service attachments without instructions. See Operation & Maintenance Manual and Attachment Service Manual.**
- **Cleaning and maintenance are required daily.**
- **Never service or adjust attachment with the engine running unless instructed to do so in manual.**
- **Always lower the attachment to the ground before lubricating or servicing.**
- **Avoid contact with leaking hydraulic fluid or diesel fuel under pressure. It can penetrate skin or eyes.**
- **Stop, cool and clean engine of flammable materials before checking fluids.**
- **Keep body, loose objects and clothing away from moving parts, electrical contacts, hot parts and exhaust.**
- **Safety glasses are needed for eye protection from electrical arcs. battery acid, compressed springs, fluids under pressure and flying debris or when tools are used. Use eye protection approved for type of welding.**

Bobcat®

ALPHABETICAL INDEX

ARM 10-30-1, 40-30-1

BACKHOE MOUNTING FRAME. 10-30-1, 20-30-1, 30-30-1
BOOM 10-30-1, 40-30-1, 50-30-1
BOOM, ARM AND BUCKET 10-30-1, 20-30-1, 30-30-1, 40-30-1
BOOM SWING ADJUSTMENT 10-10-1, 40-10-1
BUCKET 10-30-1, 40-30-1, 50-30-1
BUCKET REMOVAL 10-10-1, 40-10-1
BUCKET TEETH. 50-30-1

CONTROL VALVE 10-20-1, 20-20-1, 30-20-1, 40-20-1, 50-20-1

ELECTRICAL SCHEMATIC 50-40-1

HYDRAULIC CYLINDERS 10-20-1, 20-10-1, 20-20-1, 30-20-1, 40-20-1, 50-20-1
HYDRAULIC SCHEMATIC 10-40-1, 20-40-1, 30-40-1, 40-40-1, 50-40-1

INSPECTION 10-10-1, 20-10-1, 30-10-1, 40-10-1, 50-10-1

LOCKING MECHANISM 20-30-1, 30-30-1
LUBRICATION 10-10-1, 20-10-1, 30-10-1, 40-10-1, 50-10-1

PISTON NUT TORQUE PROCEDURE 20-20-1, 30-20-1

RELIEF VALVE 10-20-1
RUBBER STOPS 10-30-1

SAFETY CHAIN 20-30-1, 30-30-1
SEAT ADJUSTMENT 40-10-1
STABILIZER 40-30-1
SWING CHAIN 10-30-1
SWING FRAME. 20-30-1, 30-30-1
SPECIFICATIONS 10-40-1, 20-40-1, 30-40-1, 40-40-1, 50-40-1

TENSION SPRING ASSEMBLY 20-30-1, 30-30-1
TROUBLESHOOTING 10-10-1, 20-10-1, 30-10-1, 40-10-1, 50-10-1

X-CHANGE® 50-30-1

Bobcat®

Backhoe Service Manual

CONTENTS

SERIAL NUMBER LOCATION III

IDENTIFICATION AND MACHINE SIGNS (DECALS) IV

406 & 506 BACKHOE
- PREVENTIVE MAINTENANCE. 10-10-1
- HYDRAULIC SYSTEM 10-20-1
- MAIN FRAME 10-30-1
- SPECIFICATIONS AND SCHEMATICS 10-40-1

607 & 709 BACKHOE
- PREVENTIVE MAINTENANCE. 20-10-1
- HYDRAULIC SYSTEM 20-20-1
- MAIN FRAME 20-30-1
- SPECIFICATIONS AND SCHEMATICS 20-40-1

8811 BACKHOE
- PREVENTIVE MAINTENANCE. 30-10-1
- HYDRAULIC SYSTEM 30-20-1
- MAIN FRAME 30-30-1
- SPECIFICATIONS AND SCHEMATICS 30-40-1

MO6 BACKHOE
- PREVENTIVE MAINTENANCE. 40-10-1
- HYDRAULIC SYSTEM 40-20-1
- MAIN FRAME 40-30-1
- SPECIFICATIONS AND SCHEMATICS 40-40-1

BOB-TACH MOUNTED BACKHOE
- PREVENTIVE MAINTENANCE. 50-10-1
- HYDRAULIC SYSTEM 50-20-1
- MAIN FRAME 50-30-1
- SPECIFICATIONS AND SCHEMATICS 50-40-1

CALIFORNIA

PROPOSITION 65 WARNING

Diesel engine exhaust and some of its constituents are known to the State of California to cause cancer, birth defects and other reproductive harm.

Bobcat®

SERIAL NUMBER LOCATION

Figure 1

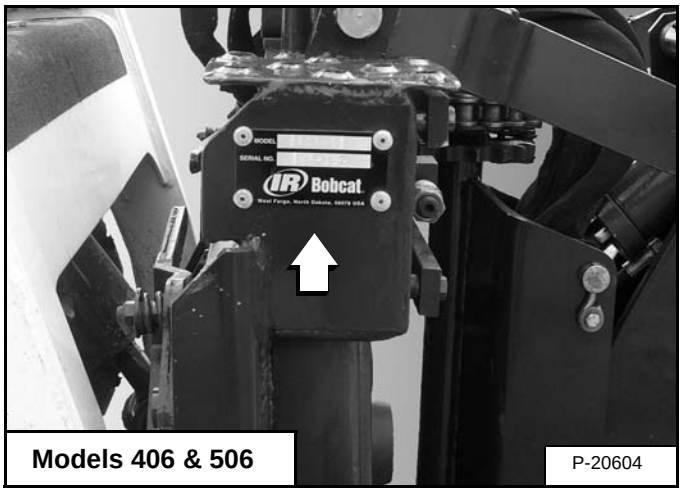

Models 406 & 506

Figure 2

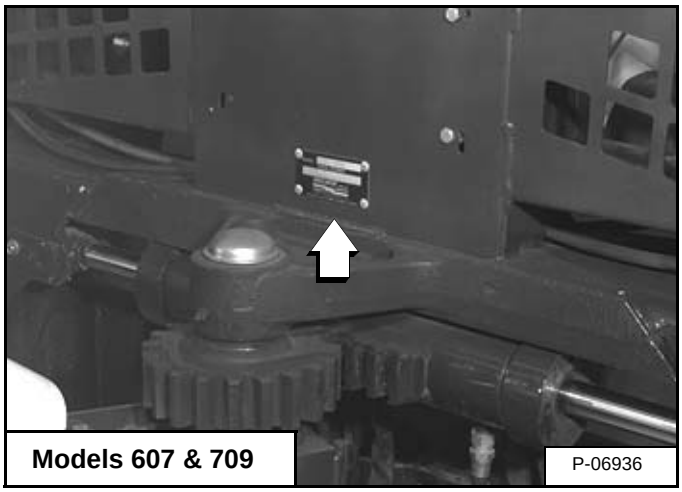

Models 607 & 709

Figure 3

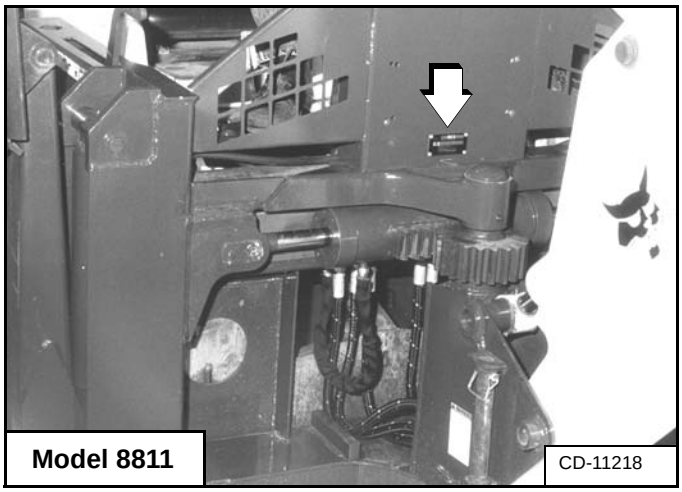

Model 8811

Figure 4

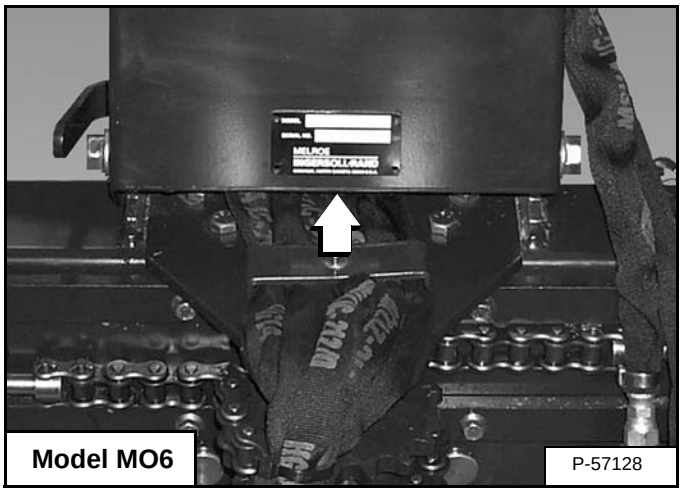

Model MO6

Figure 5

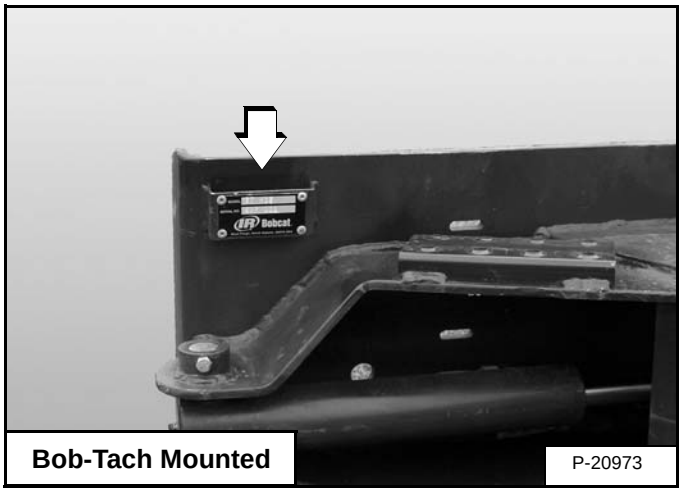

Bob-Tach Mounted

Always use the serial number of the backhoe when requesting service information or when ordering parts. Early or later models (identification made by serial number) may use different parts, or it may be necessary to use a different procedure in doing a specific service operation **[Figure 1]** thru **[Figure 5]**.

IDENTIFICATION AND MACHINE SIGNS (DECALS)

406 & 506 Backhoes

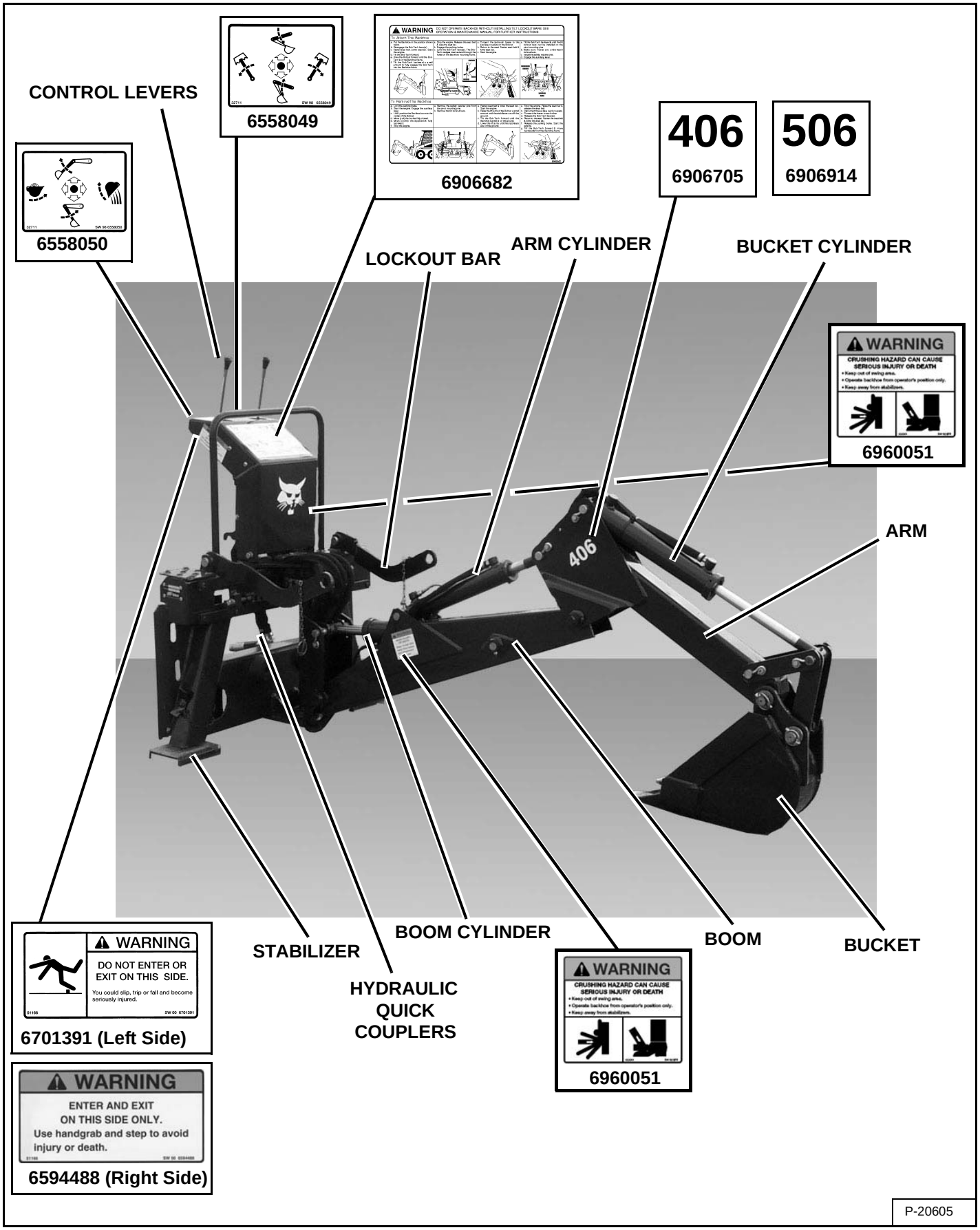

607 & 709 Backhoes With Telescoping Stabilizers

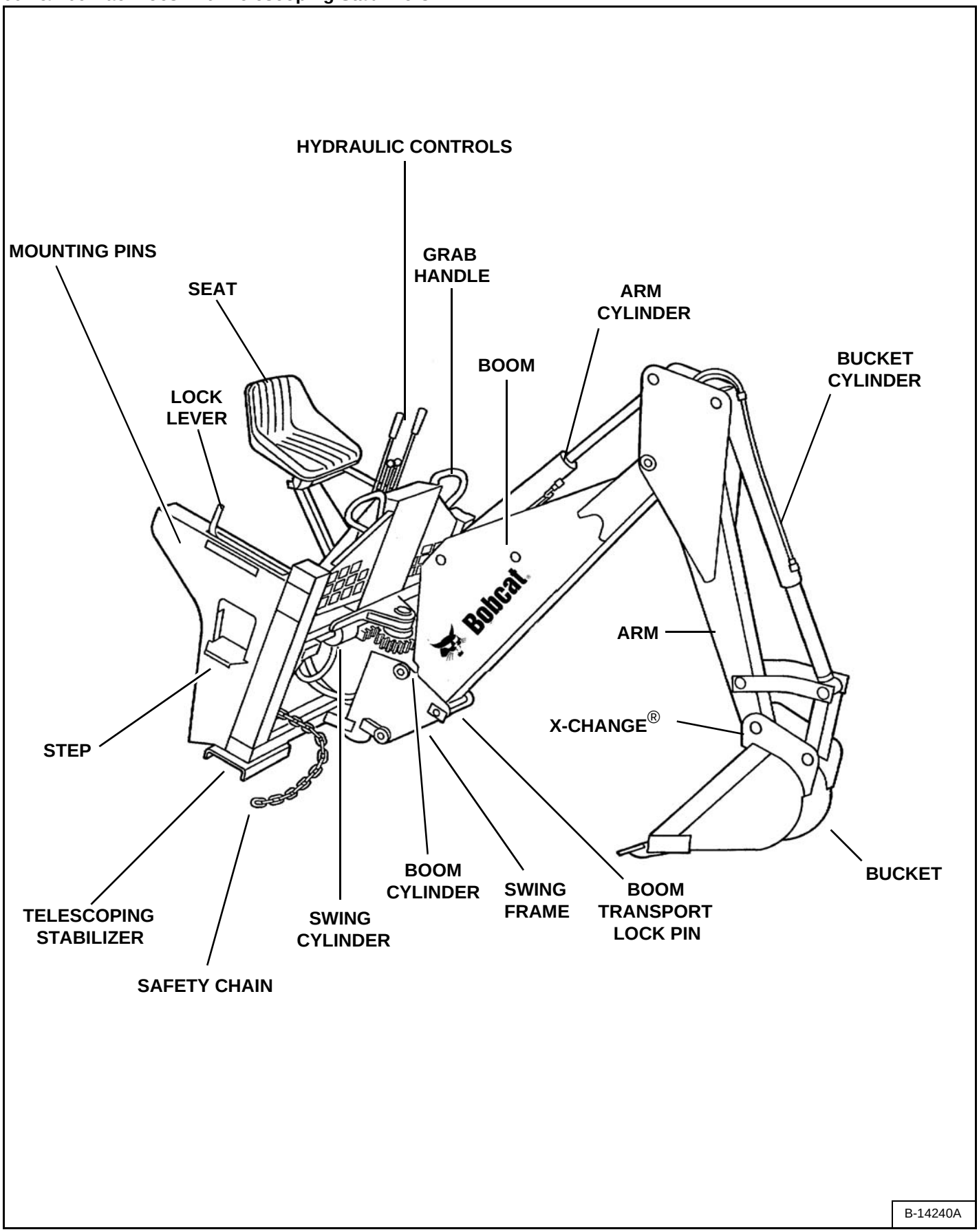

607 & 709 Backhoes With Telescoping Stabilizers (Cont'd)

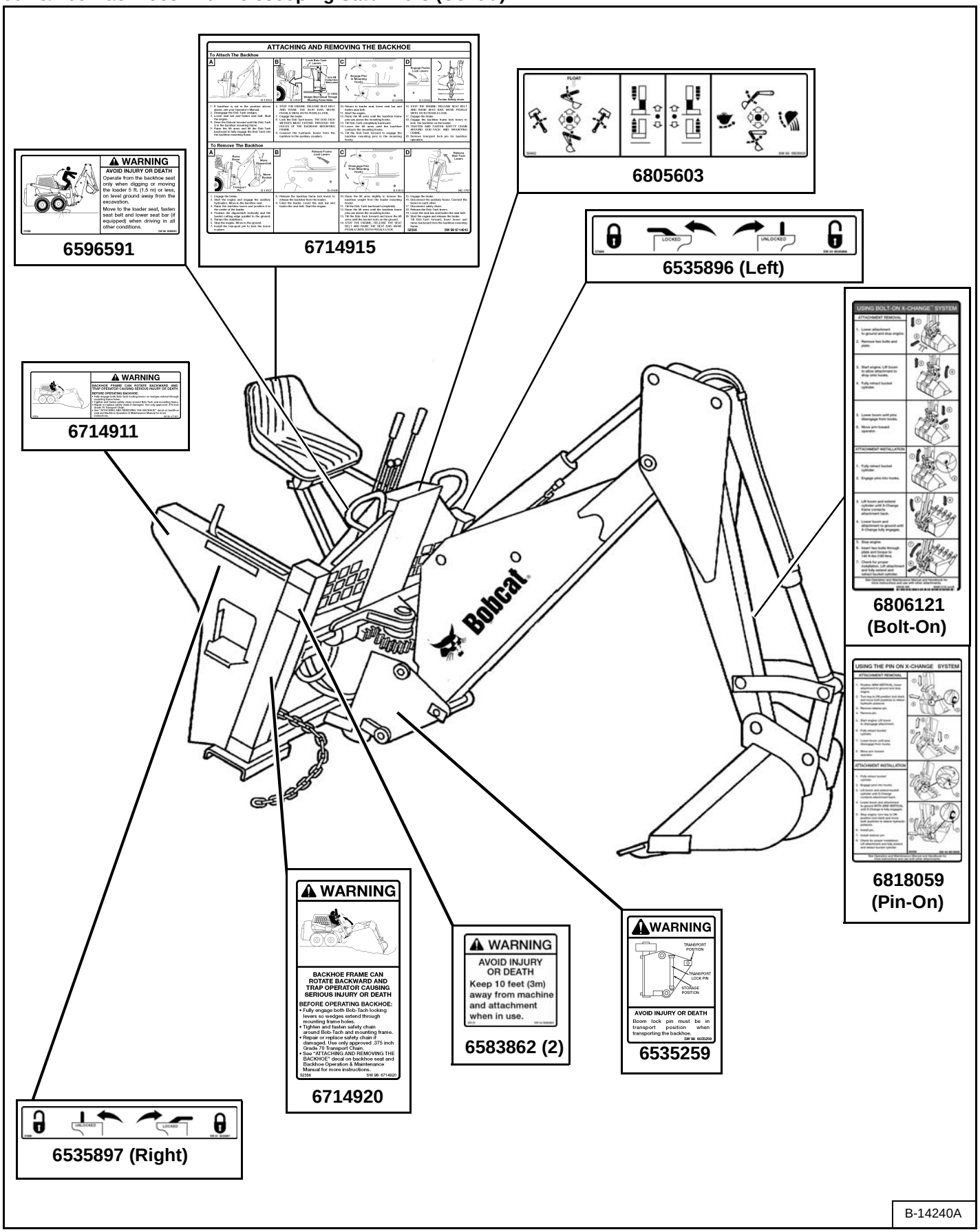

607 & 709 Backhoes With Outrigger Stabilizers

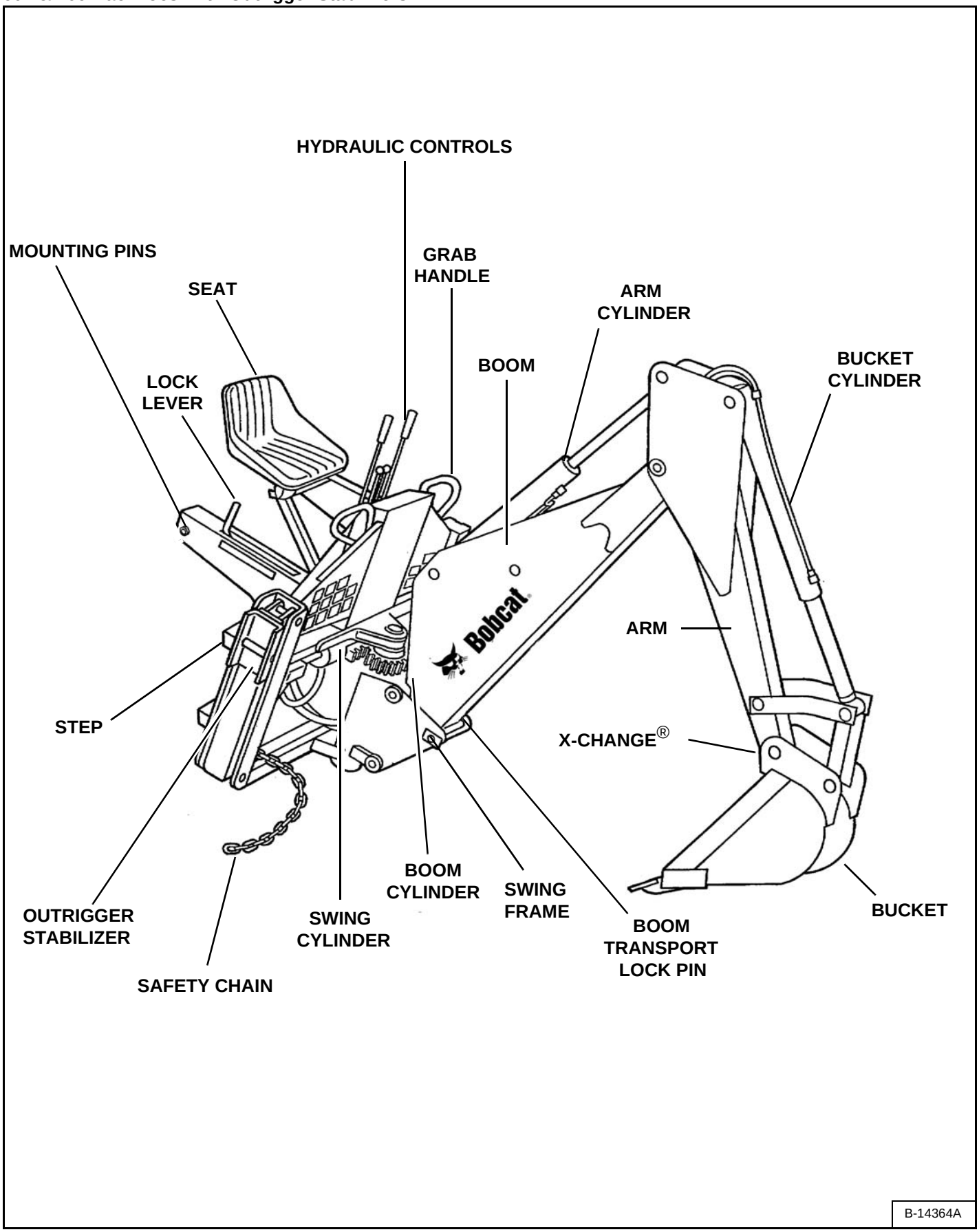

607 & 709 Backhoes With Outrigger Stabilizers (Cont'd)

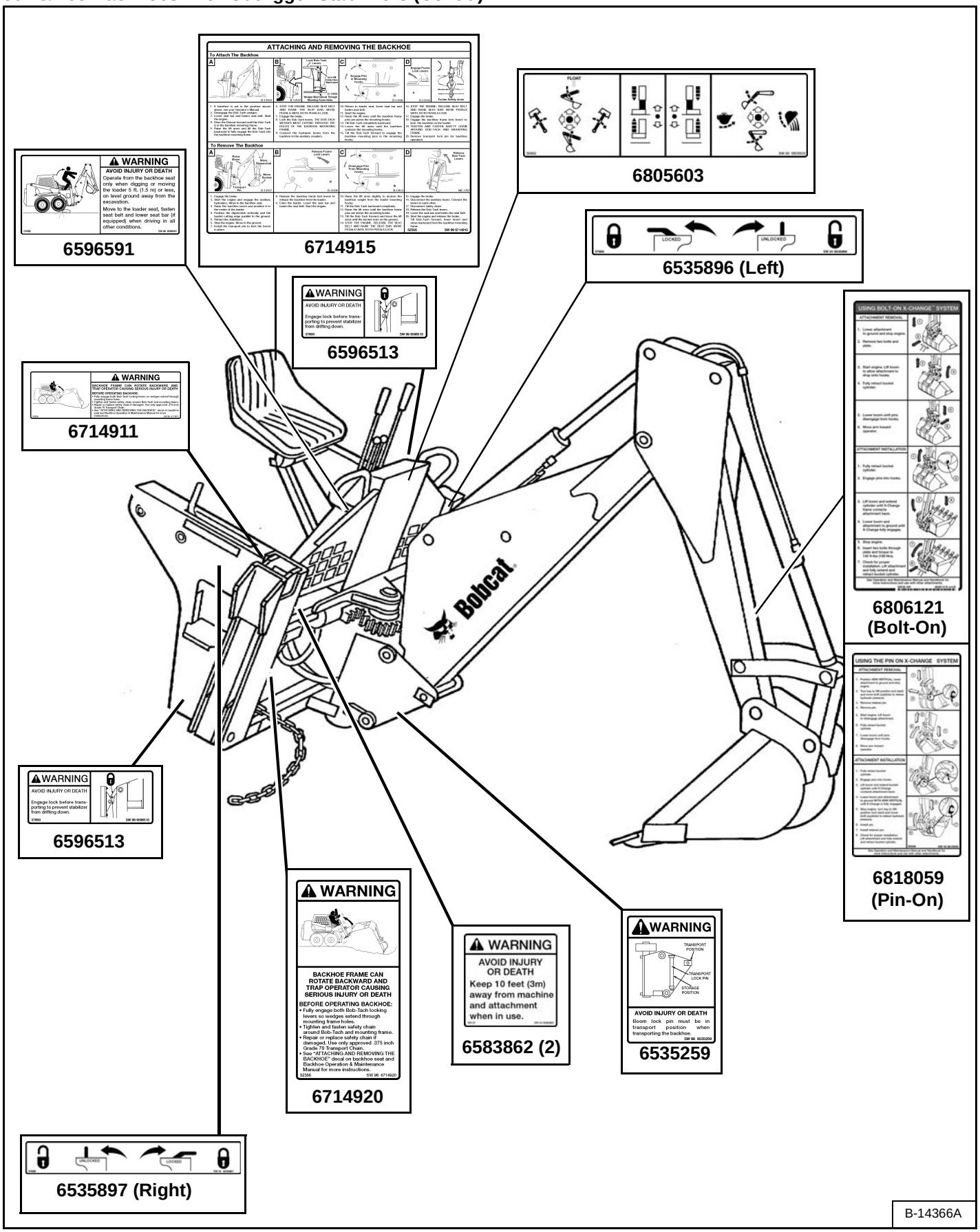

8811 Backhoe

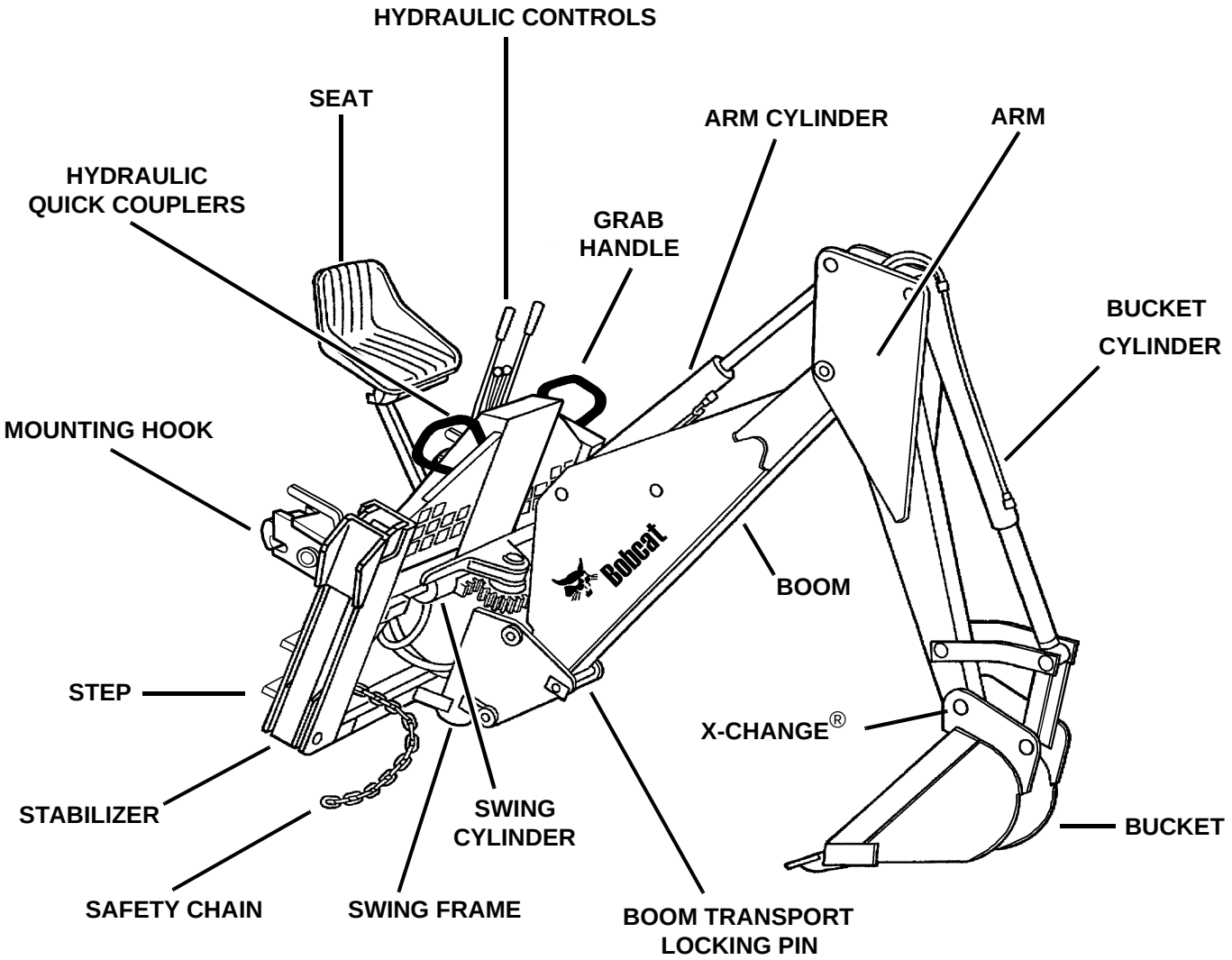

B-19770A

8811 Backhoe (Cont'd)

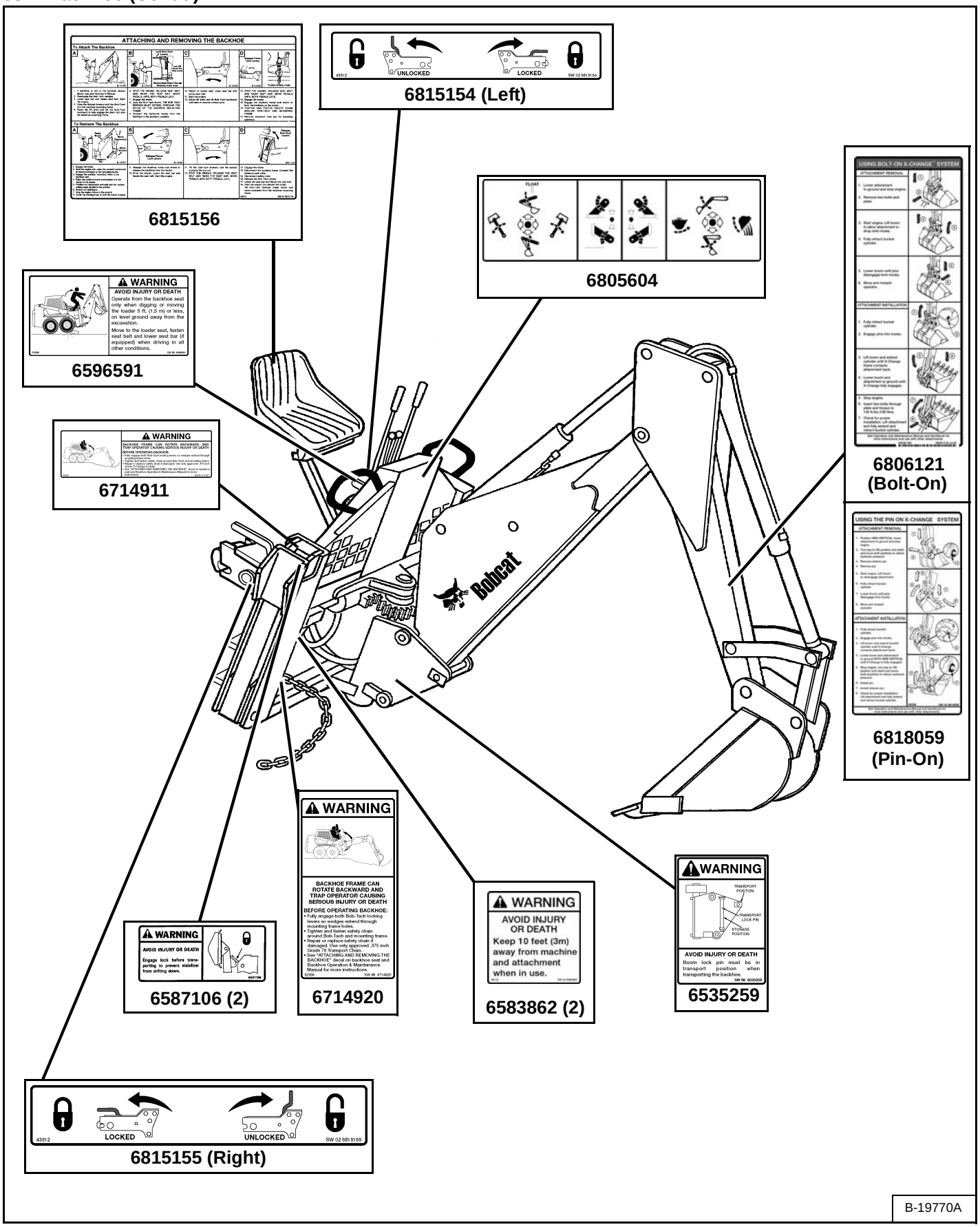

MO6 Backhoe

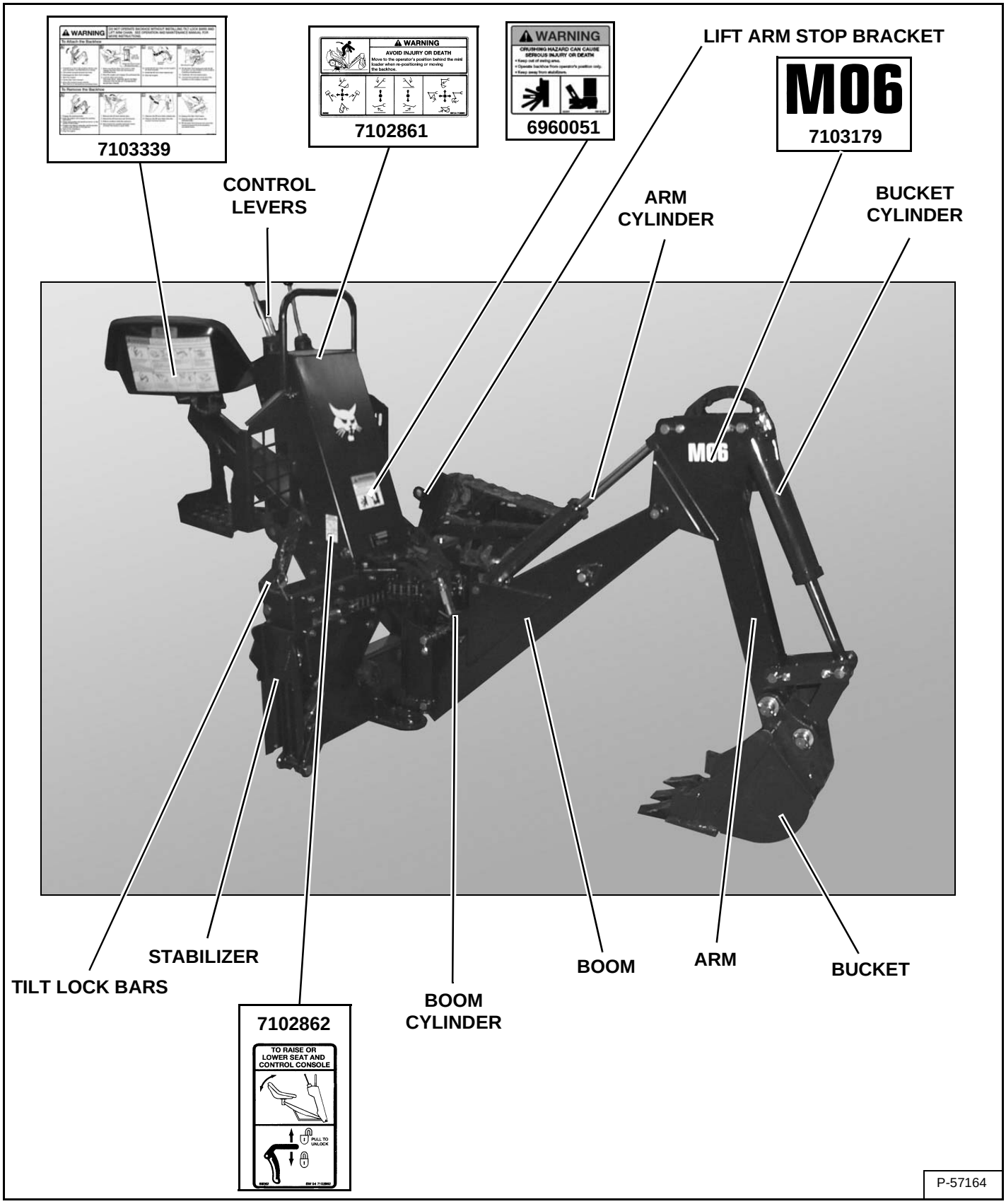
7103339
7102861
WARNING
AVOID INJURY OR DEATH
6960051
WARNING
CRUSHING HAZARD CAN CAUSE SERIOUS INJURY OR DEATH
LIFT ARM STOP BRACKET
MO6
7103179
CONTROL LEVERS
ARM CYLINDER
BUCKET CYLINDER
MO6
TILT LOCK BARS
STABILIZER
BOOM CYLINDER
BOOM
ARM
BUCKET
7102862
TO RAISE OR LOWER SEAT AND CONTROL CONSOLE
PULL TO UNLOCK
P-57164

Bob-Tach Mounted Backhoe

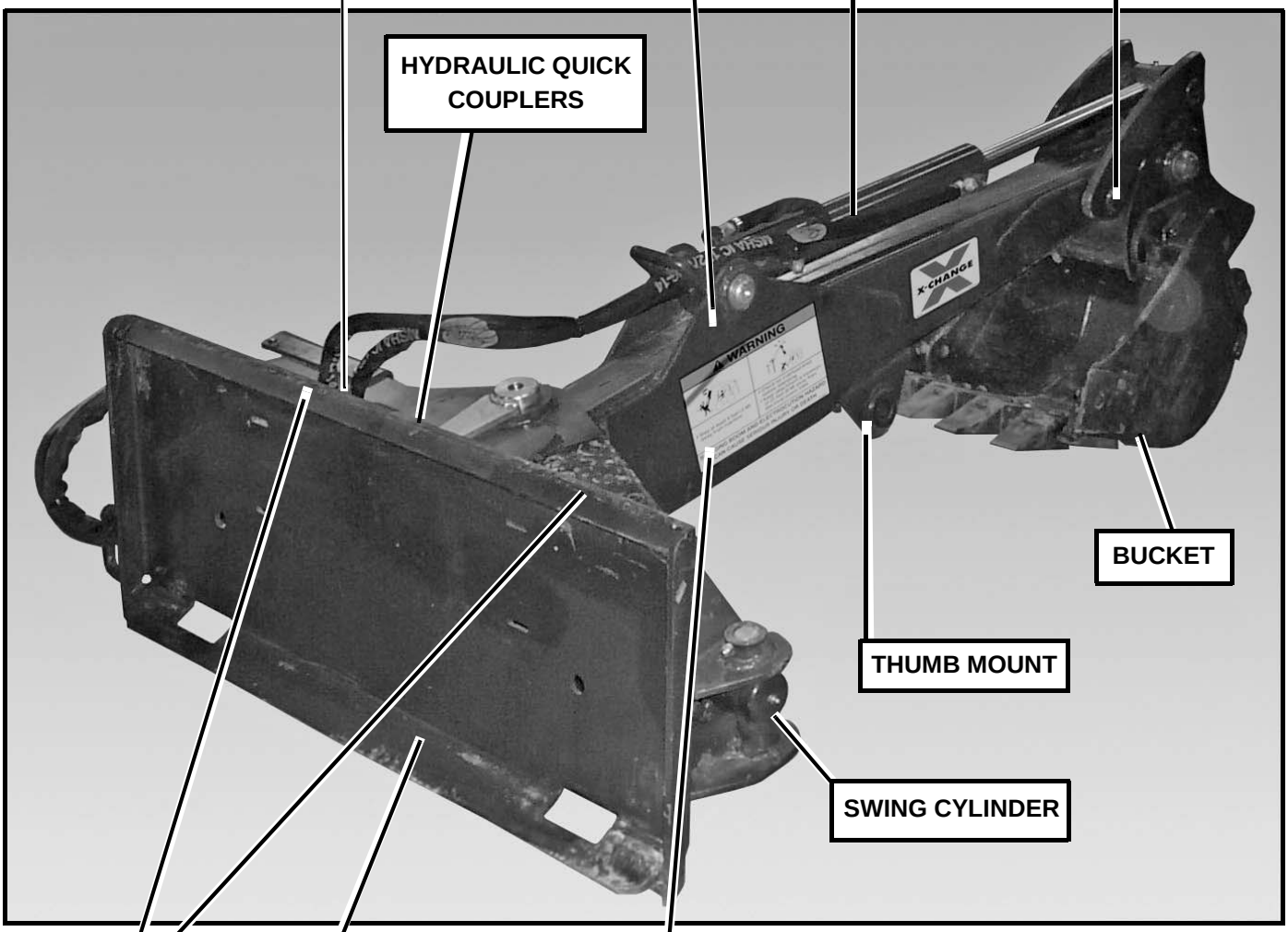

6958217

(WARNING - Decal is located on both sides of the boom)

P-79567

PREVENTIVE MAINTENANCE

406 BACKHOE (S/N 631010000 & BELOW, S/N 631010001 & ABOVE)
506 BACKHOE (S/N 631110001 & BELOW, S/N 631110001 & ABOVE)

BOOM SWING ADJUSTMENT 10-10-10

BUCKET REMOVAL 10-10-11

INSPECTION 10-10-4
Backhoe Inspection 10-10-6
Hand Lever Bob-Tach Inspection. 10-10-4
Power Bob-Tach Inspection 10-10-5

LUBRICATION 10-10-7

TROUBLESHOOTING 10-10-3

Bobcat®

WARNING

AVOID INJURY OR DEATH

Instructions are necessary before operating or servicing machine. Read and understand the Operation & Maintenance Manual, Operator's Handbook and signs (decals) on machine. Follow warnings and instructions in the manuals when making repairs, adjustments or servicing. Check for correct function after adjustments, repairs or service. Untrained operators and failure to follow instructions can cause injury or death.

W-2003-0807

PROBLEM	CAUSE	CORRECTION
Loss of hydraulic action.	The auxiliary control on the loader is not engaged.	The auxiliary control must be activated.
	The male and female quick couplers on the Backhoe hoses are not installed on the correct hoses.	Reverse the quick couplers on the hydraulic hoses of the Backhoe.
	Hydraulic fluid level is low.	*Add fluid of the correct type.
Hydraulic action is not smooth.	Hydraulic fluid level is low.	*Add fluid of the correct type.
	Air in the hydraulic system.	Operate all the cylinders (except the swing cylinder) as far as possible both ways and hold the controls for several seconds after the cylinders reached the end of the strokes.
No cushion in the swing cylinder.	Air in the cylinder caused by a leak or repair of the swing cylinder.	Repair as needed. Remove the air from the cylinder.
Swing chain breaking.	Not adjusted correctly.	Adjust the chain.

*See the loader's Operation & Maintenance Manual, Specification Section for the correct type of fluid to use.

INSPECTION

Hand Lever Bob-Tach Inspection

WARNING

Bob-Tach wedges must extend through the holes in attachment. Levers must be fully down and locked. Failure to secure wedges can allow attachment to come off and cause injury or death.

W-2102-0588

Figure 10-10-1

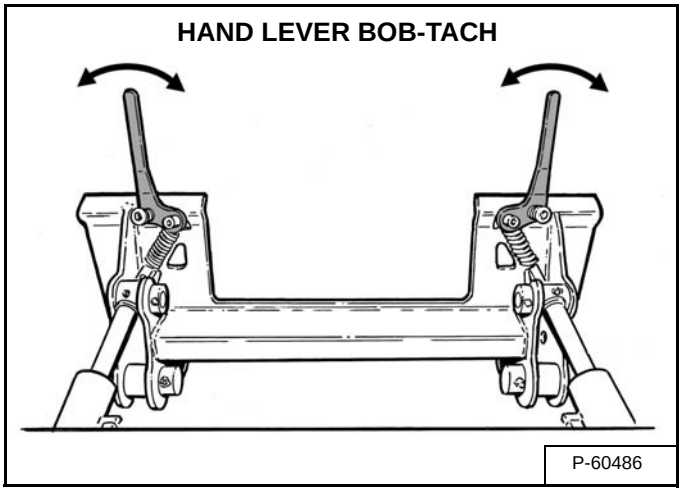

Move the Bob-Tach levers to engage and disengage the wedges **[Figure 10-10-1]**. The levers and wedges must move freely.

Figure 10-10-2

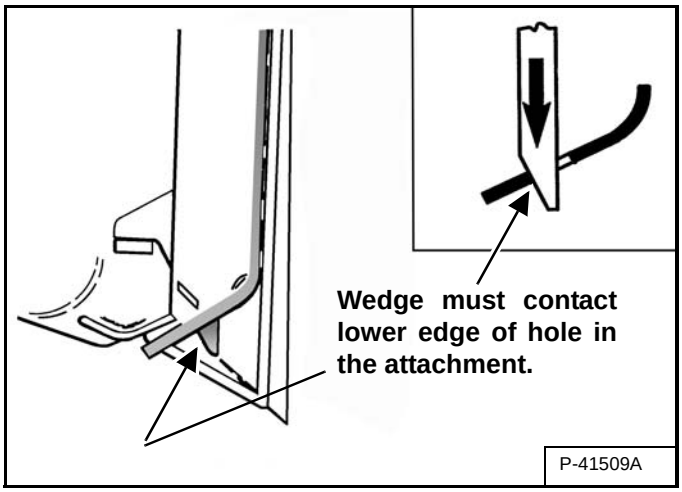

The wedges must extend through the holes in the attachment mounting frame **[Figure 10-10-2]**.

If the wedge does not contact the lower edge of the hole **[Figure 10-10-2]**, the attachment will be loose and can come off the Bob-Tach.

Figure 10-10-3

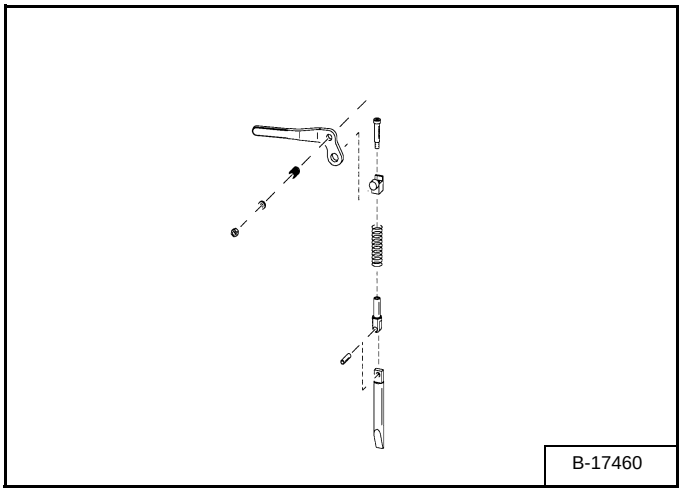

Inspect the mounting frame on the attachment and the Bob-Tach, linkages and wedges for excessive wear or damage **[Figure 10-10-3]**. Replace any parts that are damaged, bent or missing. Keep all fasteners tight.

Look for cracked welds. Contact your Bobcat dealer for repair or replacement parts.

Lubricate the wedges. (See the correct loader Operation & Maintenance Manual for *LUBRICATION OF THE BOBCAT LOADER*.)

Power Bob-Tach Inspection

WARNING

Bob-Tach wedges must extend through the holes in attachment. Levers must be fully down and locked. Failure to secure wedges can allow attachment to come off and cause injury or death.

W-2102-0588

Figure 10-10-4

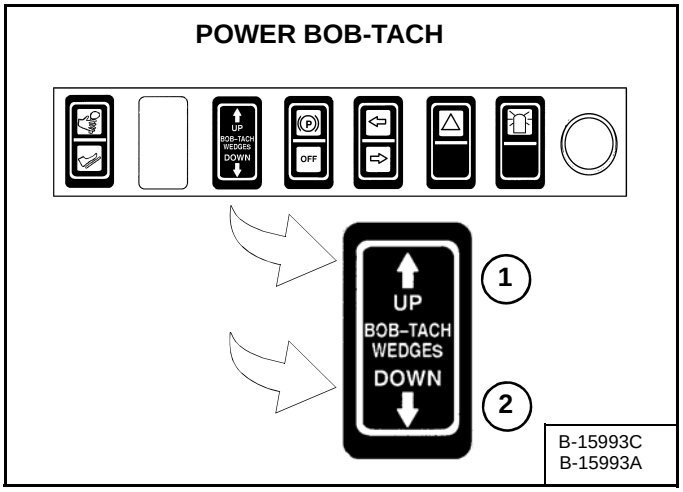

Figure 10-10-5

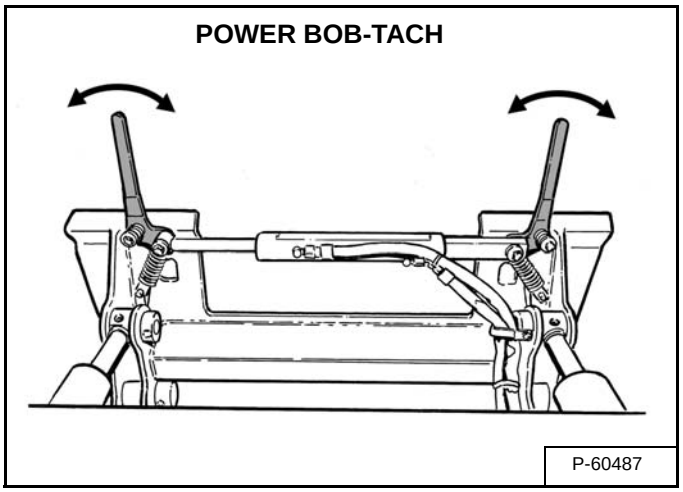

Push and hold the BOB-TACH WEDGES UP switch (Item 1) until the wedges are fully raised. Push and hold the BOB-TACH WEDGES DOWN switch (Item 2) **[Figure 10-10-4]** until the wedges are fully lowered.

The levers and wedges must move freely **[Figure 10-10-5]**.

Figure 10-10-6

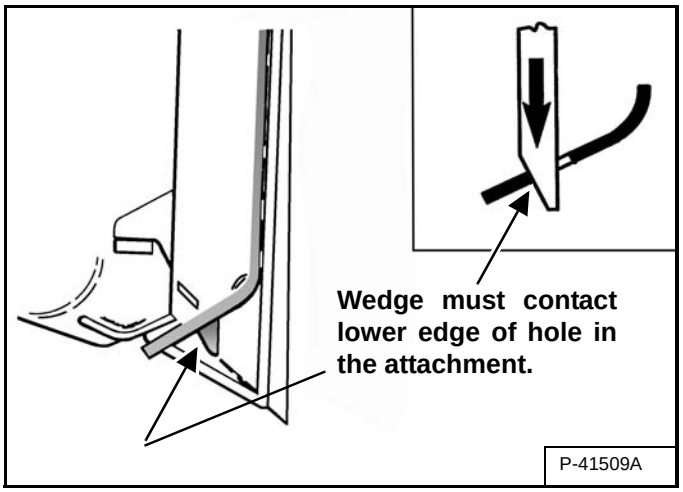

The wedges must extend through the holes in the attachment mounting frame **[Figure 10-10-6]**.

If the wedge does not contact the lower edge of the hole **[Figure 10-10-6]**, the attachment will be loose and can come off the Bob-Tach.

Figure 10-10-7

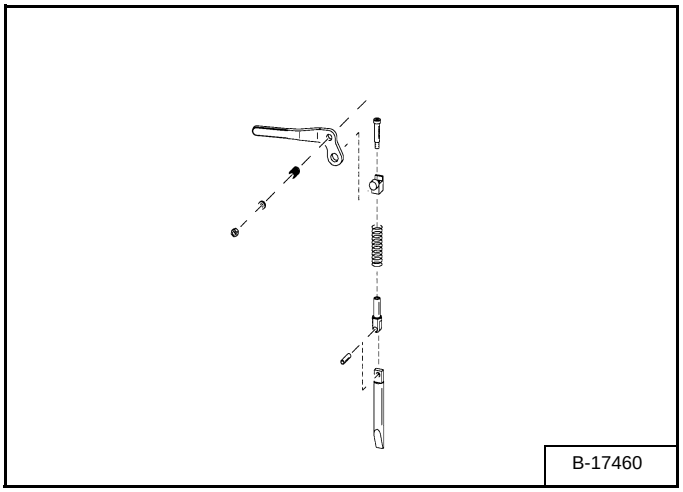

Inspect the mounting frame on the attachment and the Bob-Tach, linkages and wedges for excessive wear or damage **[Figure 10-10-7]**. Replace any parts that are damaged, bent or missing. Keep all fasteners tight.

Look for cracked welds. Contact your Bobcat dealer for repair or replacement parts.

Lubricate the wedges. (See the correct loader Operation & Maintenance Manual for *LUBRICATION OF THE BOBCAT LOADER*.)

INSPECTION (CONT'D)

Backhoe Inspection

Figure 10-10-8

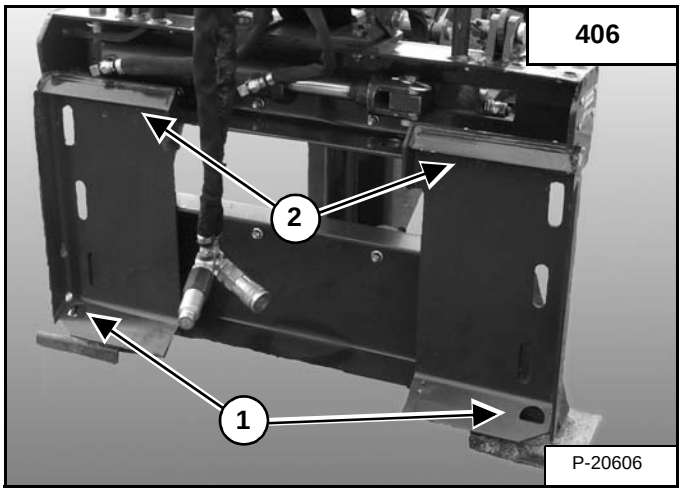

Figure 10-10-9

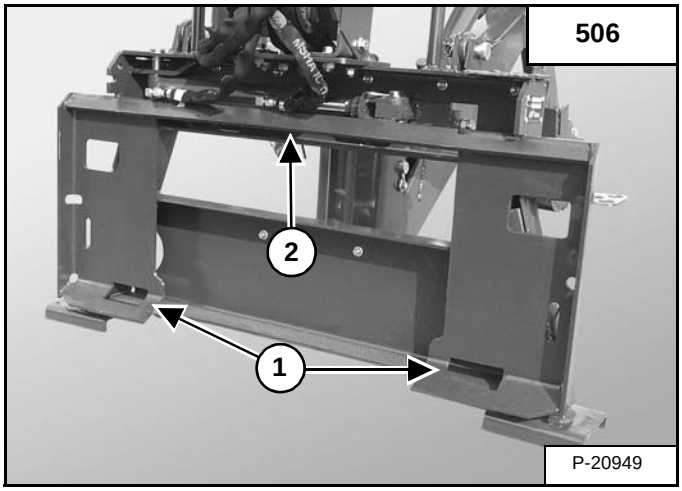

Inspect the Bob-Tach wedge mount (Item 1) **[Figure 10-10-8]** and **[Figure 10-10-9]**, mounting flange (Item 2) **[Figure 10-10-8]** and **[Figure 10-10-9]** and all welds on the Backhoe mount for wear and damage each time the Backhoe is removed from the loader.

Figure 10-10-10

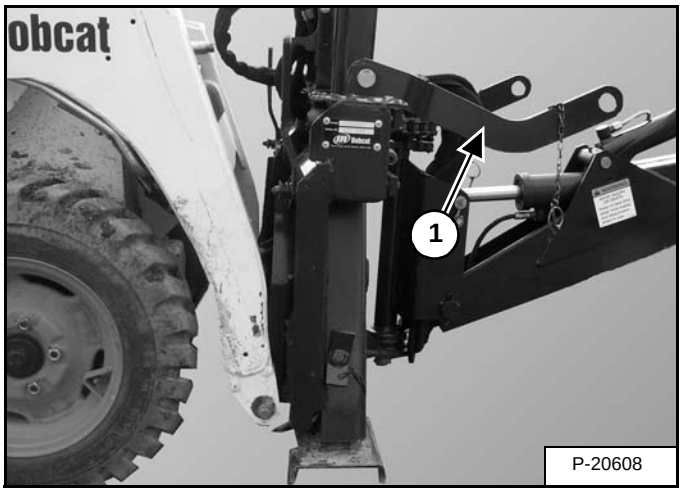

Figure 10-10-11

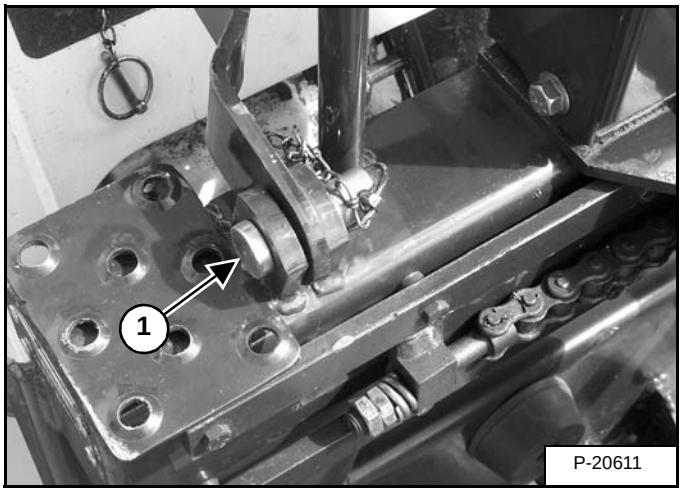

Inspect lockout bars (Item 1) **[Figure 10-10-10]** and retaining pins (Item 1) **[Figure 10-10-11]** for wear and damage each time the Backhoe is removed from the loader.

LUBRICATION

WARNING

AVOID INJURY OR DEATH

Always lower the Backhoe attachment to the ground before lubricating or servicing.

W-2178-0295

Figure 10-10-12

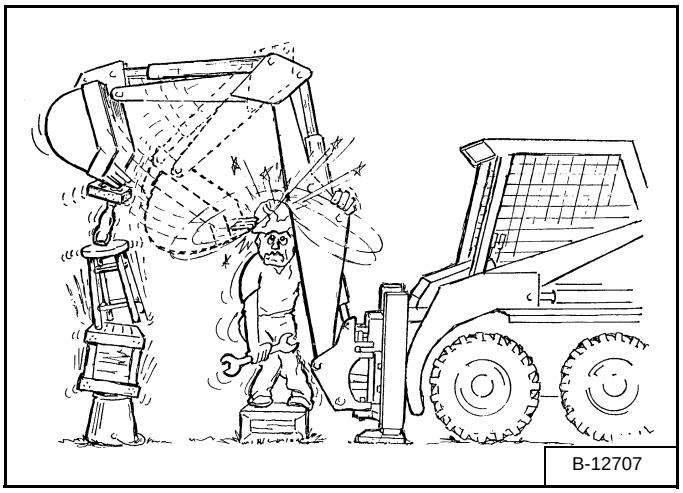

WARNING

AVOID INJURY OR DEATH

Always lower the Backhoe attachment to the ground before lubricating or servicing.

W-2178-0295

Use only a high quality, multi-purpose, lithium base grease. Add grease to the fittings until the extra grease shows.

Lubricate the Backhoe every **8 HOURS** of operation:

Figure 10-10-13

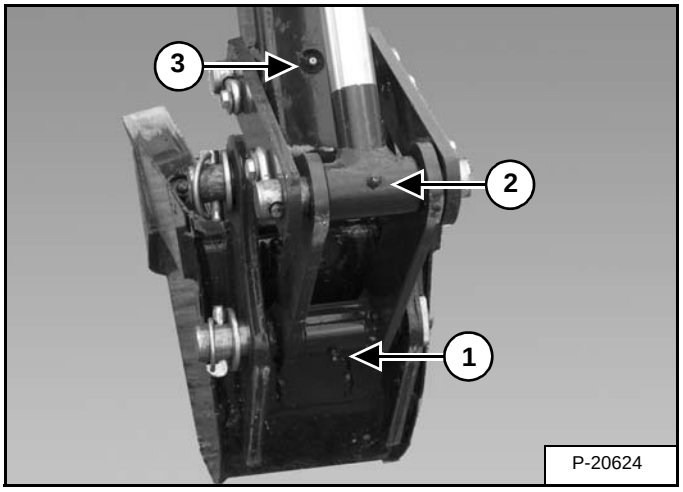

Grease the bucket link (Item 1), bucket cylinder rod end (Item 2) and arm bushings (Item 3) **[Figure 10-10-13]**.

Figure 10-10-14

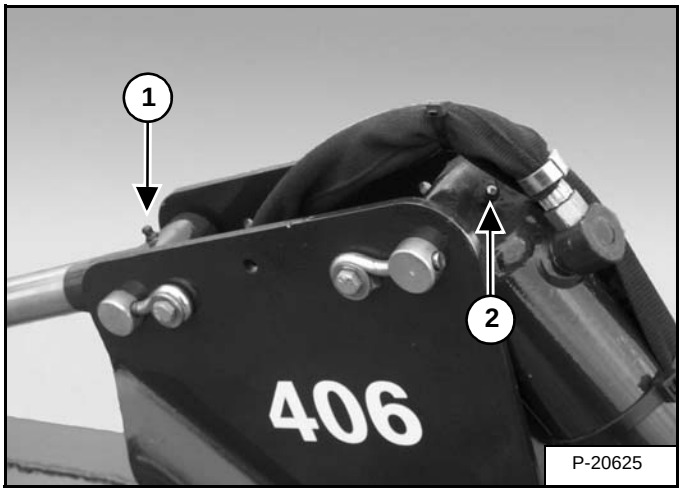

Grease the bucket cylinder base end (Item 1) and arm cylinder rod end (Item 2) **[Figure 10-10-14]**.

Figure 10-10-15

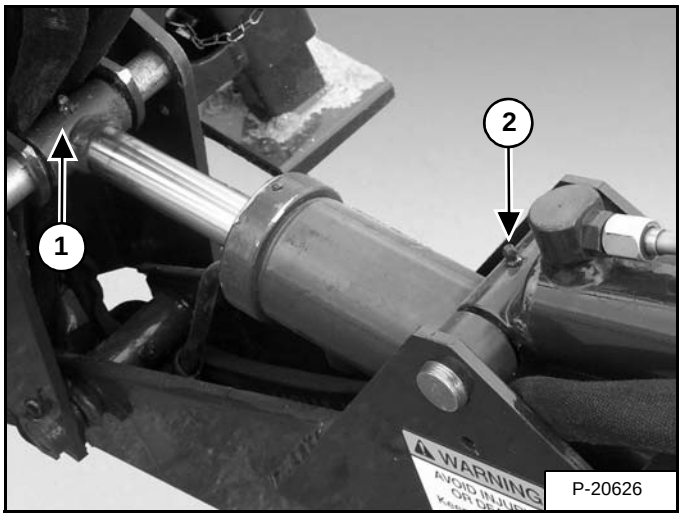

Grease the boom cylinder base end (Item 1) and arm cylinder base end (Item 2) **[Figure 10-10-15]**.

Figure 10-10-16

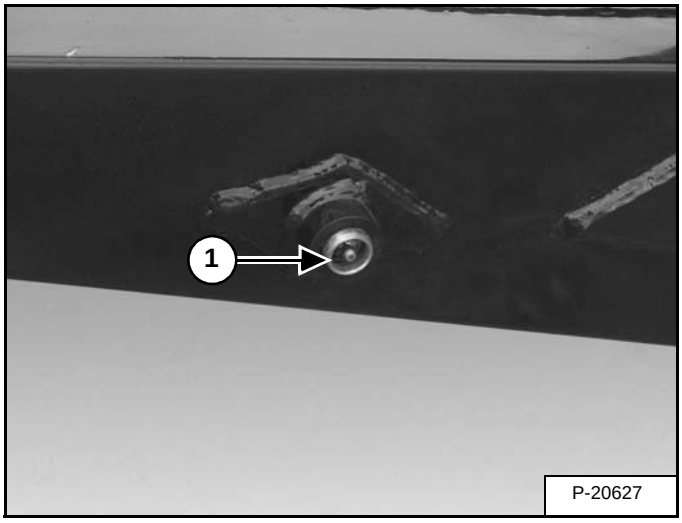

Grease the boom cylinder rod end (Item 1) **[Figure 10-10-16]**.

Figure 10-10-17

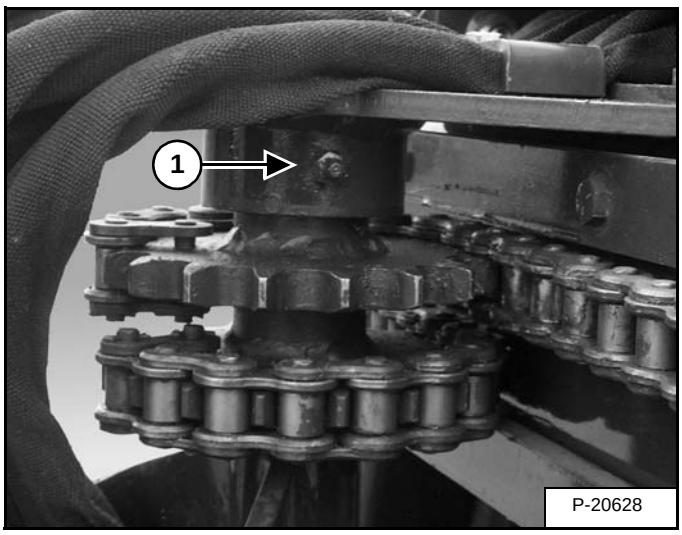

Grease the top turn bearings (Item 1) **[Figure 10-10-17]**

Figure 10-10-18

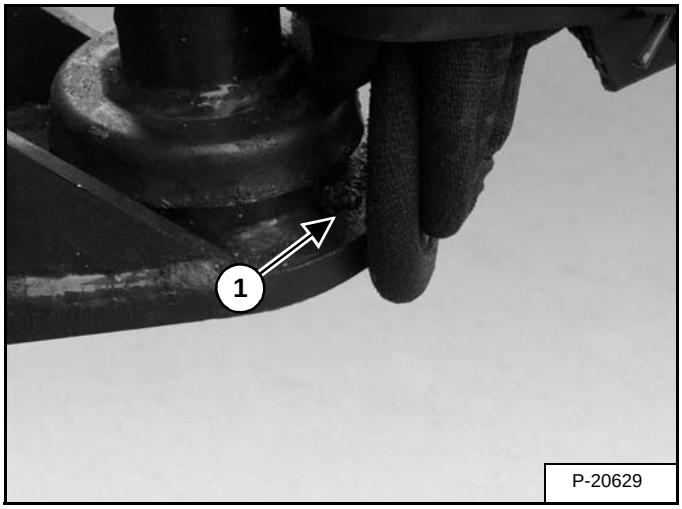

Grease the bottom turn bearings (Item 1) **[Figure 10-10-18]**.

Figure 10-10-19

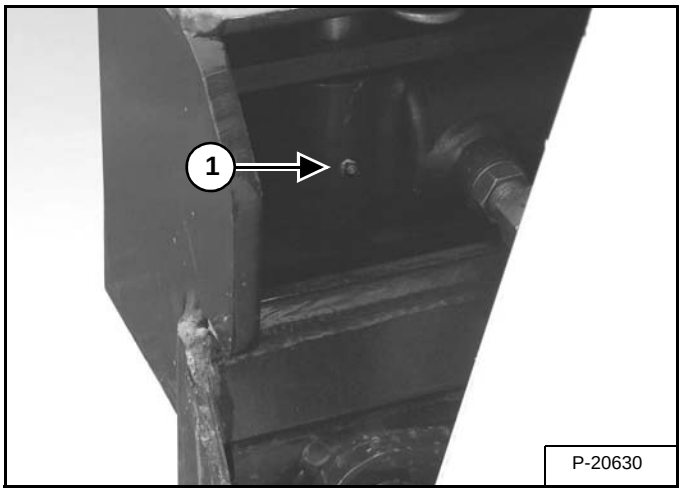

Grease the boom swing cylinder base end (Item 1) **[Figure 10-10-19]**.

BOOM SWING ADJUSTMENT

WARNING

AVOID INJURY OR DEATH

Wear safety glasses to prevent eye injury when any of the following conditions exist:

- **When fluids are under pressure.**
- **Flying debris or loose material is present.**
- **Engine is running.**
- **Tools are being used.**

W-2019-0907

Figure 10-10-20

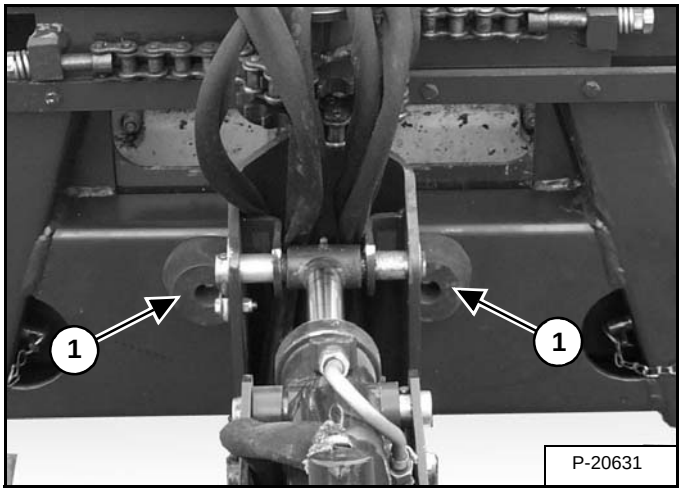

The boom must swing a full 180 degrees and hit against a rubber stop at each end of each swing (Item 1) **[Figure 10-10-20]**.

Adjustment to tighten the swing chain:

Figure 10-10-21

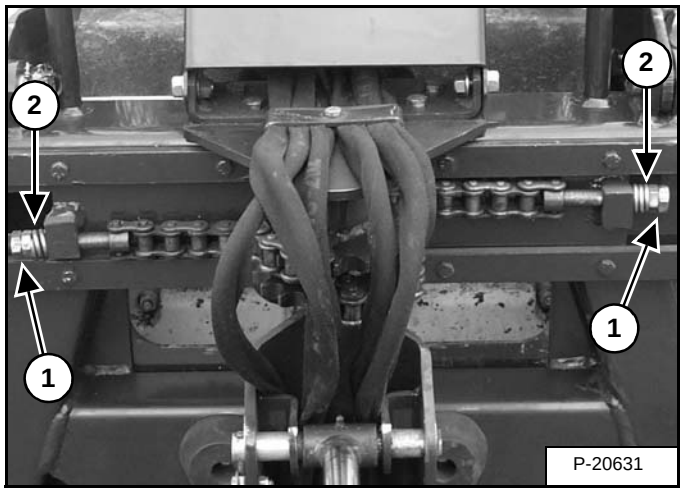

Make sure the boom is in the centered position.

Remove the lock nuts (Item 1) **[Figure 10-10-21]**.

Tighten the adjusting nut (Item 2) **[Figure 10-10-21]** until the gap between the last two coils of the spring is at .025 inches (.0635 mm).

NOTE: Do not overtighten and compress the spring fully.

Install the lock nut and tighten.

Adjustment if the boom swings further one way:

Make sure the boom is in the centered position.

Remove the lock nuts (Item 1) **[Figure 10-10-21]**.

Loosen the adjustment nut (Item 2) **[Figure 10-10-21]** on the side it swings the farthest and tighten the adjustment nut an equal amount on the short side.

NOTE: Do not overtighten and compress the spring fully.

Swing the backhoe boom both ways to check adjustment.

If correct (full 90 degrees swing both ways), install the lock nuts and tighten.

BUCKET REMOVAL

Figure 10-10-22

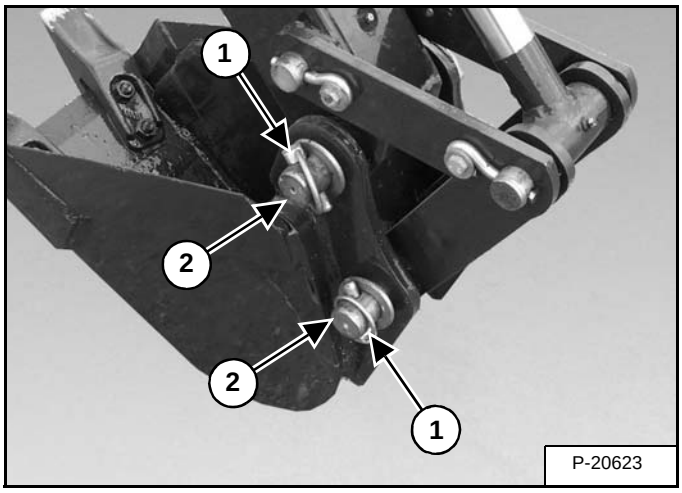

Remove retaining pins (Item 1) **[Figure 10-10-22]**.

Remove pins (Item 2) **[Figure 10-10-22]** to slide bucket off.

Product: Bobcat Backhoe Service Repair Workshop Manual
Full Download: https://www.arepairmanual.com/downloads/bobcat-backhoe-service-repair-workshop-manual-2/

Bobcat®

Sample of manual. Download All 350 pages at:
https://www.arepairmanual.com/downloads/bobcat-backhoe-service-repair-workshop-manual-2/