Product: Kubota LA764 Service Manual
Full Download: https://www.arepairmanual.com/downloads/kubota-la764-service-manual/

WSM

WORKSHOP MANUAL
FRONT LOADER

LA764

Kubota

KiSC issued 10, 2011 A

Sample of manual. Download All 61 pages at:
https://www.arepairmanual.com/downloads/kubota-la764-service-manual/

Product: Kubota LA764 Service Manual
Full Download: https://www.arepairmanual.com/downloads/kubota-la764-service-manual/

TO THE READER

This Workshop Manual tells the servicing personnel about the mechanism, servicing and maintenance of the Front Loader LA764. It contains 4 parts: **"Information"**, **"General"**, **"Mechanism"** and **"Servicing"**.

■ **Information**

This section primarily contains information below.

- Safety First
- Safety Decal
- Terminology
- Specification

■ **General**

This section primarily contains information below.

- Loader Identification
- General Precautions
- Lubricants
- Tightening Torques
- Maintenance Check List
- Check and Maintenance

■ **Mechanism**

This section contains information on the structure and the function of the unit. Before you continue with the subsequent sections, make sure that you read this section.

■ **Servicing**

This section primarily contains information below.

- Troubleshooting
- Servicing Specifications
- Tightening Torques
- Removing Front Loader from Tractor
- Checking, Disassembling and Servicing

All illustrations, photographs and specifications contained in this manual are of the newest information available at the time of publication.

KUBOTA reserves the right to change all information at any time without notice.

Since this manual includes many models, information or illustrations and photographs can show more than one model.

Novemeber, 2011

© KUBOTA Corporation 2011

KiSC issued 10, 2011 A

Sample of manual. Download All 61 pages at:
https://www.arepairmanual.com/downloads/kubota-la764-service-manual/

I INFORMATION

INFORMATION

CONTENTS

1. SAFETY FIRST I-1
2. SAFETY DECALS I-4
3. LOADER TERMINOLOGY I-6
4. SPECIFICATIONS I-7
   [1] LOADER SPECIFICATIONS I-7
   [2] BUCKET SPECIFICATIONS I-7
   [3] DIMENSIONAL SPECIFICATIONS I-8
   [4] OPERATIONAL SPECIFICATIONS I-9
      (1) Specifications Table I-9
      (2) Performance Curves I-10

1. SAFETY FIRST

⚠ SAFETY FIRST

- **This symbol, the industry's "Safety Alert Symbol", is used throughout this manual and on labels on the machine itself to warn of the possibility of personal injury. Read these instructions carefully.**
- **It is essential that you read the instructions and safety regulations before you attempt to repair or use this unit.**

⚠ DANGER
- **Indicates an imminently hazardous situation which, if not avoided, will result in death or serious injury.**

⚠ WARNING
- **Indicates a potentially hazardous situation which, if not avoided, could result in death or serious injury.**

⚠ CAUTION
- **Indicates a potentially hazardous situation which, if not avoided, may result in minor or moderate injury.**

■ IMPORTANT
- **Indicates that equipment or property damage could result if instructions are not followed.**

■ NOTE
- **Gives helpful information.**

WSM000001INI0001US1

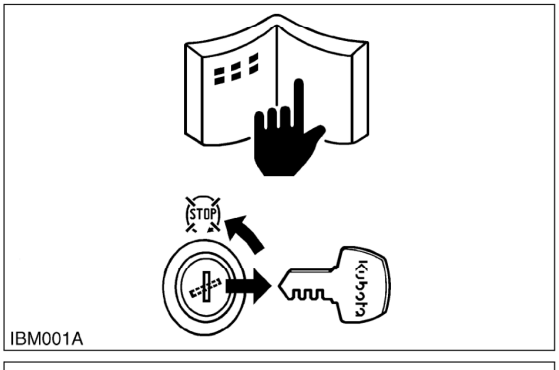

IBM001A

IBM002A

BEFORE YOU START SERVICE

- Read all instructions and safety instructions in this manual and on your machine safety decals.
- Clean the work area and machine.
- Park the machine on a stable and level ground, and set the parking brake.
- Lower the implement to the ground.
- Stop the engine, then remove the key.
- Disconnect the battery negative cable.
- Hang a **"DO NOT OPERATE"** tag in the operator station.

WSM000001INI0010US1

START SAFELY

- Do not do the procedures below when you start the engine.
  - short across starter terminals
  - bypass the safety start switch
- Do not alter or remove any part of machine safety system.
- Before you start the engine, make sure that all shift levers are in neutral positions or in disengaged positions.
- Do not start the engine when you stay on the ground. Start the engine only from operator's seat.

WSM000001INI0015US0

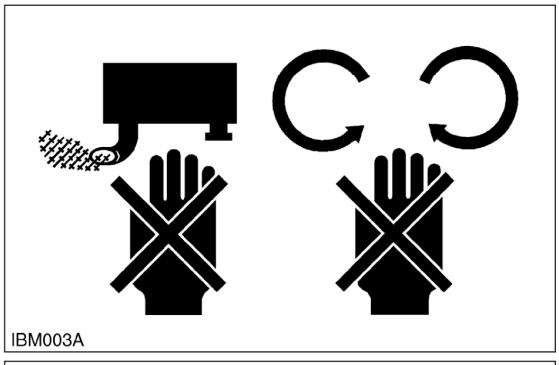
IBM003A

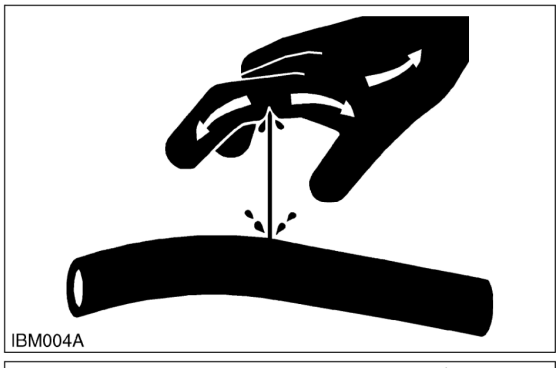
IBM004A

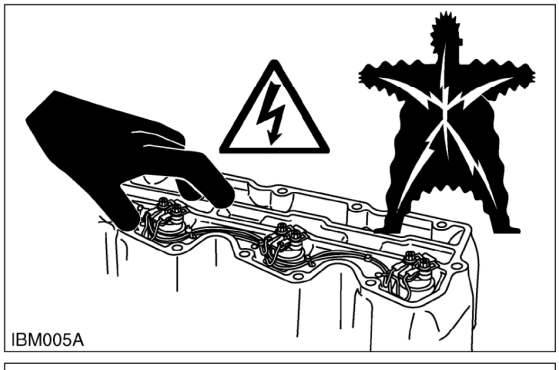
IBM005A

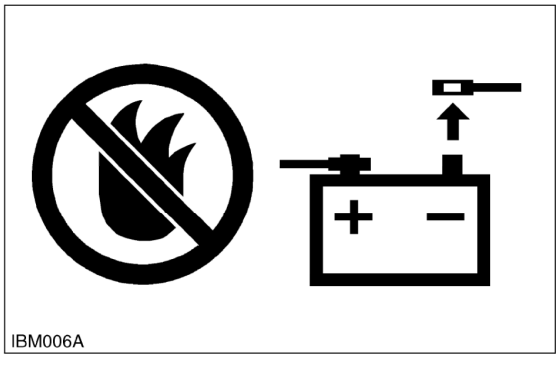
IBM006A

OPERATE SAFELY

- Do not use the machine after you consume alcohol or medication or when you are tired.
- Put on applicable clothing and safety equipment.
- Use applicable tools only. Do not use alternative tools or parts.
- When 2 or more persons do servicing, make sure that you do it safely.
- Do not operate below the machine that only a jack holds. Always use a safety stand to hold the machine.
- Do not touch the hot parts or parts that turn when the engine operates.
- Do not remove the radiator cap when the engine operates, or immediately after it stops. If not, hot water can spout out from the radiator. Only remove the radiator cap when it is at a sufficiently low temperature to touch with bare hands. Slowly loosen the cap to release the pressure before you remove it fully.
- Released fluid (fuel or hydraulic oil) under pressure can cause damage to the skin and cause serious injury. Release the pressure before you disconnect hydraulic or fuel lines. Tighten all connections before you apply the pressure.
- Do not open a fuel system under high pressure. The fluid under high pressure that stays in fuel lines can cause serious injury. Do not disconnect or repair the fuel lines, sensors, or any other components between the fuel pump and injectors on engines with a common rail fuel system under high pressure.
- Put on an applicable ear protective device (earmuffs or earplugs) to prevent injury against loud noises.
- Be careful about electric shock. The engine generates a high voltage of more than DC100 V in the ECU and is applied to the injector.

WSM000001INI0012US1

PREVENT A FIRE

- Fuel is very flammable and explosive under some conditions. Do not smoke or let flames or sparks in your work area.
- To prevent sparks from an accidental short circuit, always disconnect the battery negative cable first and connect it last.
- The battery gas can cause an explosion. Keep the sparks and open flame away from the top of battery, especially when you charge the battery.
- Make sure that you do not spill fuel on the engine.

WSM000001INI0005US1

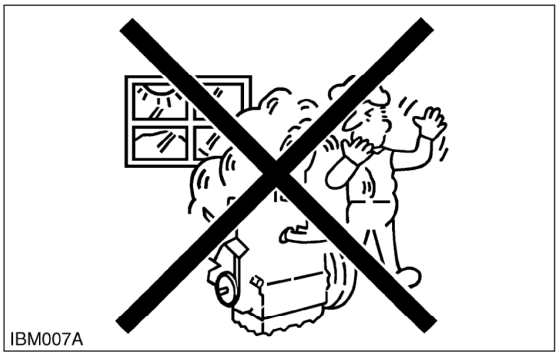
IBM007A

KEEP A GOOD AIRFLOW IN THE WORK AREA

- If the engine is in operation, make sure that the area has good airflow. Do not operate the engine in a closed area. The exhaust gas contains poisonous carbon monoxide.

WSM000001INI0006US1

IBM009A

DISCARD FLUIDS CORRECTLY

- Do not discard fluids on the ground, down the drain, into a stream, pond, or lake. Obey related environmental protection regulations when you discard oil, fuel, coolant, electrolyte and other dangerous waste.

WSM000001INI0007US1

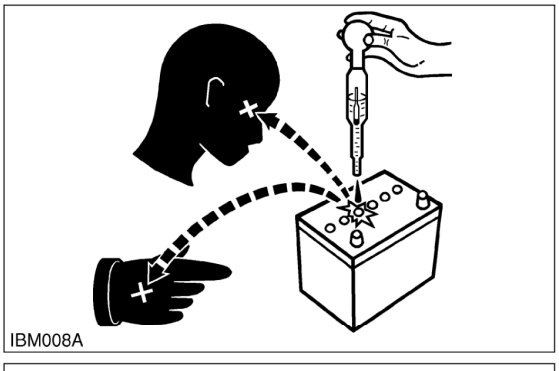
IBM008A

PREVENT ACID BURNS

- Keep electrolyte away from your eyes, hands and clothing. Sulfuric acid in battery electrolyte is poisonous and it can burn your skin and clothing and cause blindness. If you spill electrolyte on yourself, clean yourself with water, and get medical aid immediately.

WSM000001INI0008US1

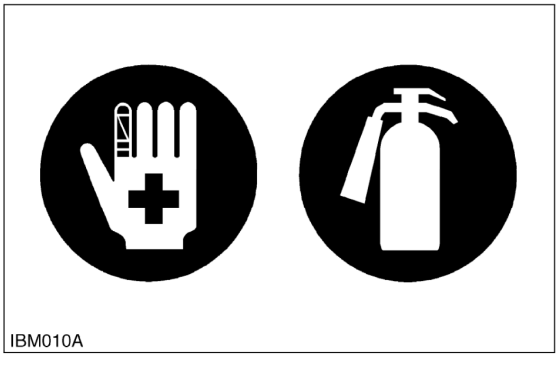
IBM010A

PREPARE FOR EMERGENCIES

- Keep a first aid kit and fire extinguisher ready at all times.
- Keep the emergency contact telephone numbers near your telephone at all times.

WSM000001INI0009US1

2. SAFETY DECALS

The following safety decals are installed on the machine. If a decal becomes damaged, illegible or is not on the machine, replace it. The decal part number is listed in the parts list.

WSM000001INI0013US0

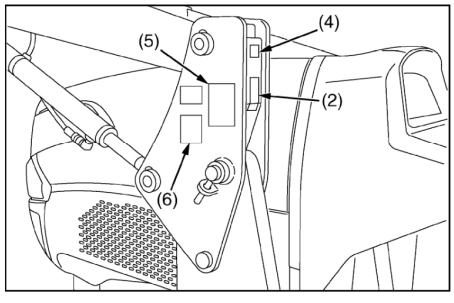

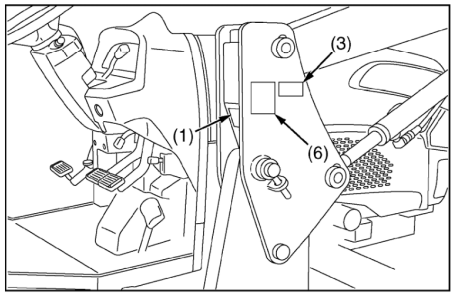

(1) Part No. 7J246-5643-1

1AIABAHAP016A

(2) Part No. 7J246-5641-1

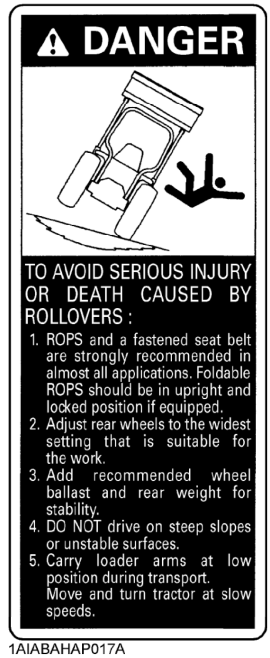

1AIABAHAP017A

(3) Part No. 7J266-5649-2

1AIABACAP077A

(4) Part No. 7J246-5642-1

1AIABAHAP018A

(5) Part No. 7J246-5645-1

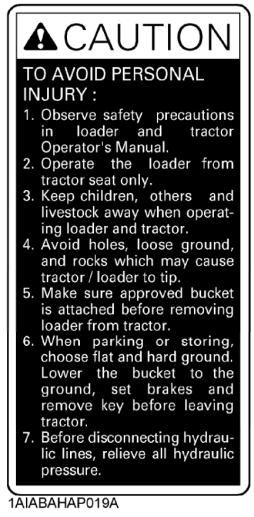

1AIABAHAP019A

(6) Part No. 7J246-5644-2 (Both sides)

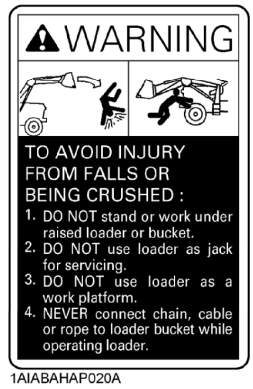

1AIABAHAP020A

9Y1210712ICI001US

9Y1210712INI0001US0

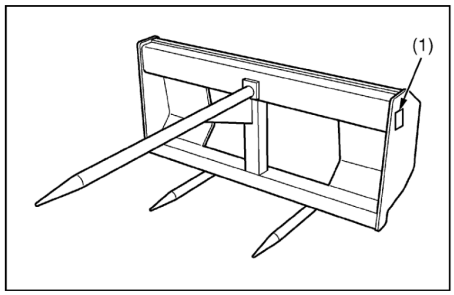

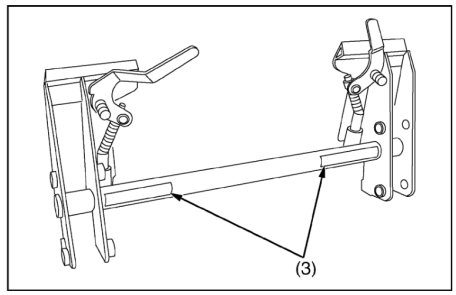

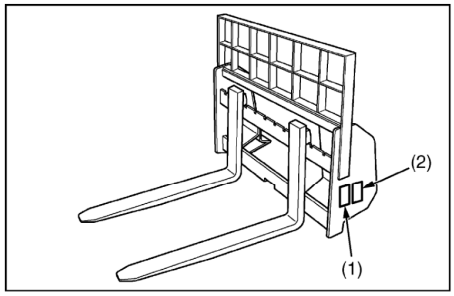

(1) Part No. 7J246-5643-1

1AIABACAP075A

(2) Part No. 7J266-3923-8

(3) Part No. 7J802-3648-5

1AIABAAAP119A

9Y1210712ICI002US

9Y1210712INI0002US0

CARE OF DANGER, WARNING AND CAUTION LABELS

1. Keep danger, warning and caution labels clean and free from obstructing material.
2. Clean danger, warning and caution labels with soap and water, dry with a soft cloth.
3. Replace damaged or missing danger, warning and caution labels with new labels from your local KUBOTA dealer.
4. If a component with danger, warning and caution label(s) affixed is replaced with new part, make sure new label(s) is (are) attached in the same location(s) as the replaced component.
5. Attach new danger, warning and caution labels on a clean dry surface. Push any bubbles to outside edge.

9Y1210712INI0003US0

3. LOADER TERMINOLOGY

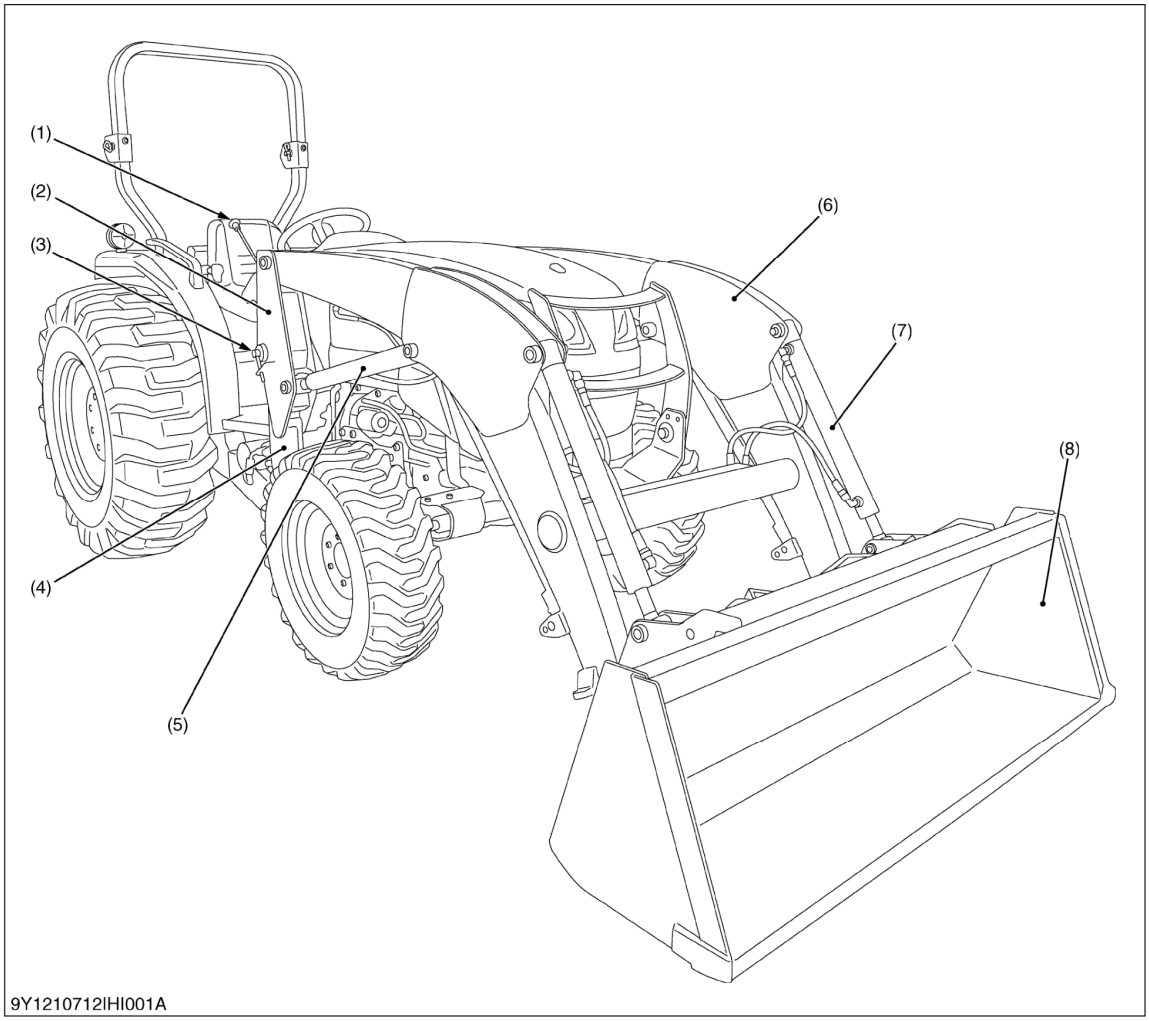

(1) Loader Control Lever
(2) Side Frame
(3) Mounting Pin
(4) Main Frame
(5) Boom Cylinder
(6) Boom
(7) Bucket Cylinder
(8) Bucket

9Y1210712INI0004US0

4. SPECIFICATIONS

■ Suitable Tractor

Loader Model	LA764
Tractor Model	L4600

9Y1210712INI0005US0

[1] LOADER SPECIFICATIONS

Loader Model		LA764	
Tractor Model		L4600	
Model		2WD	4WD
Wheel Base (WB)		1850 mm (72.8 in.)	1845 mm (72.6 in.)
Front Tires		7.5L-15	8.3-16
Rear Tires		14.9-24	
Boom Cylinder	Bore	50 mm (1.97 in.)	
	Stroke	520 mm (20.5 in.)	
Bucket Cylinder	Bore	50 mm (1.97 in.)	
	Stroke	480.5 mm (18.92 in.)	
Control Valve	3 position bucket control type	One Detent Float Position, Regenerative Bucket Dump, Power Beyond Circuit	
Rated Flow		29.4 L/min. 7.77 U.S. gals/min. 6.47 Imp. gals/min.	
Maximum Pressure		17.7 MPa 180 kgf/cm^2 2560 psi	
Net Weight (Approximate)		524 kg (1155 lbs)	

9Y1210712INI0006US0

[2] BUCKET SPECIFICATIONS

Loader Model		LA764		
Model		SQUARE 72"	ROUND 72" HD	SQUARE 72" LIGHT MATERIAL
Type		Quick Attach	Quick Attach	Quick Attach
Width		1830 mm (72 in.)		
Depth **"L"**		547 mm (21.5 in.)	477 mm (18.8 in.)	607 mm (23.9 in.)
Height **"M"**		570 mm (22.4 in.)	608 mm (23.9 in.)	570 mm (22.4 in.)
Length **"N"**		630 mm (24.8 in.)	610 mm (24 in.)	691 mm (27.2 in.)
Capacity	Struck	0.31 m^3 (10.9 cu.ft.)		0.36 m^3 (12.7 cu.ft.)
	Heaped	0.37 m^3 (13.1 cu.ft.)		0.45 m^3 (16.0 cu.ft.)
Weight		150 kg (331 lbs)	180 kg (397 lbs)	136 kg (300 lbs)

9Y1210712INI0007US0

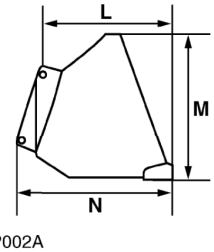

3UFAAABDP002A

[3] DIMENSIONAL SPECIFICATIONS

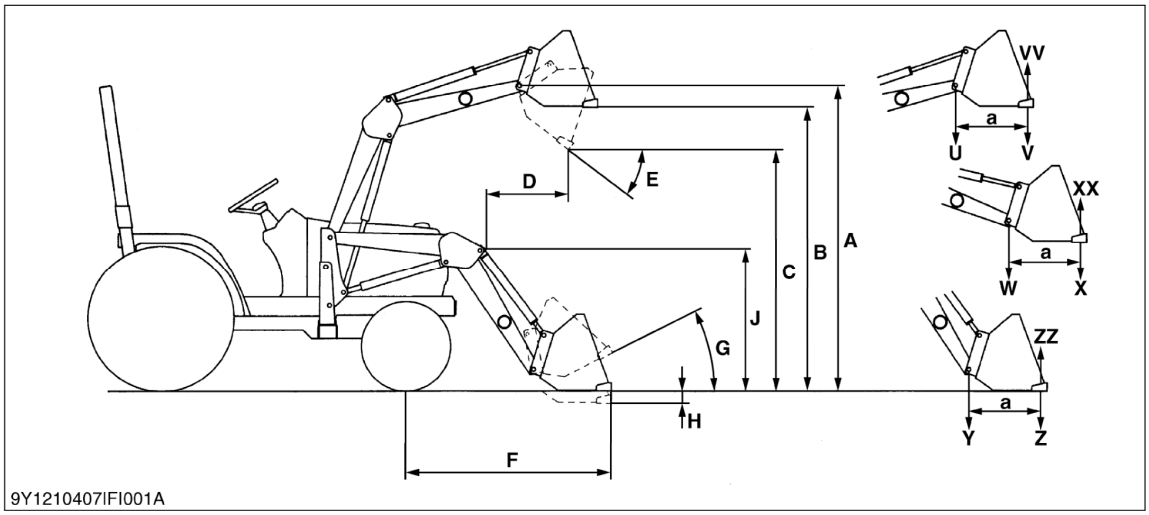

9Y1210407IFI001A

Loader Model		LA764
Tractor Model		L4600
A	Maximum lift height (To bucket pivot pin)	2673 mm (105.2 in.)
B	Maximum lift height under level bucket	2431 mm (95.71 in.)
C	Clearance with bucket dumped	2063 mm(81.22 in.)
D	Reach at maximum lift height (Dumping Reach)	604 mm(23.8 in.)
E	Maximum dump angle	0.72 rad (41 °)
F	Reach with bucket on ground	1783 mm (70.20 in.)
G	Bucket roll-back angle	0.47 rad (27 °)
H	Digging depth	156 mm (6.15 in.)
J	Overall height in carrying position	1387 mm (54.60 in.)

9Y1210712INI0008US0

[4] OPERATIONAL SPECIFICATIONS

(1) Specifications Table

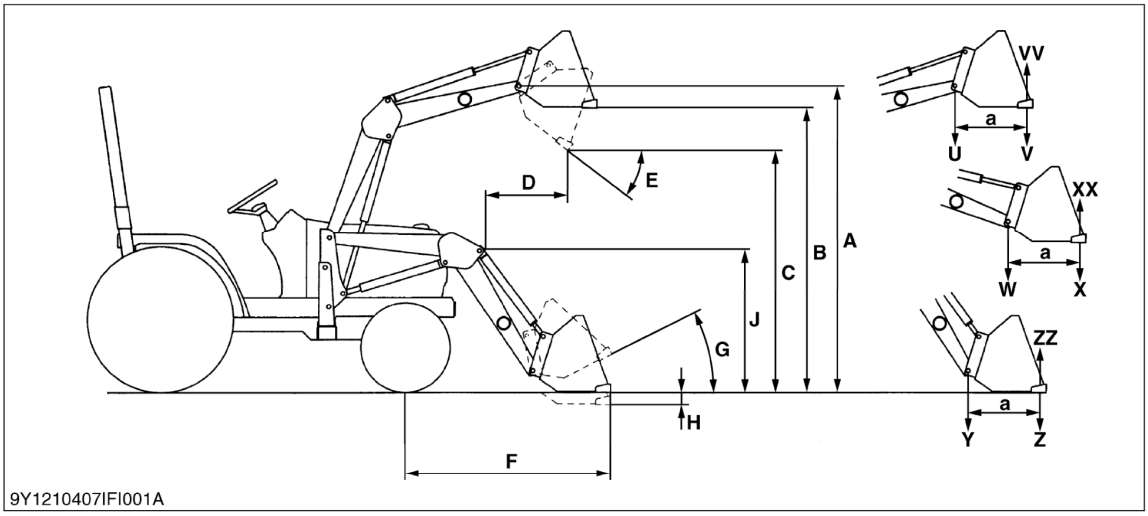

Loader Model		LA764
Tractor Model		L4600
U	Lift capacity (Bucket pivot pin, max. height)	764 kg (1684 lbs)
V	Lift capacity (500 mm forward, max. height)	573 kg (1263 lbs)
W	Lift capacity (Bucket pivot pin, 1500 mm height)	977 kg (2154 lbs)
X	Lift capacity (500 mm forward, 1500 mm height)	783 kg (1726 lbs)
Y	Breakout force (Bucket pivot pin)	14023 N (3153 lbf)
Z	Breakout force (500 mm forward)	10865 N (2443 lbf)
VV	Bucket roll-back force at maximum height	12763 N (2869 lbf)
XX	Bucket roll-back force at 1500 mm	16429 N (3673 lbf)
ZZ	Bucket roll-back force at ground level	13345 N (3000 lbf)
a	Length	500 mm (19.7 in.)
Lifting time (Rated flow)		4.0 sec.
Lowering time (Rated flow)		2.5 sec.
Bucket dumping time (Rated flow)		1.6 sec.
Bucket roll-back time (Rated flow)		2.5 sec.

9Y1210712INI0009US0

(2) Performance Curves

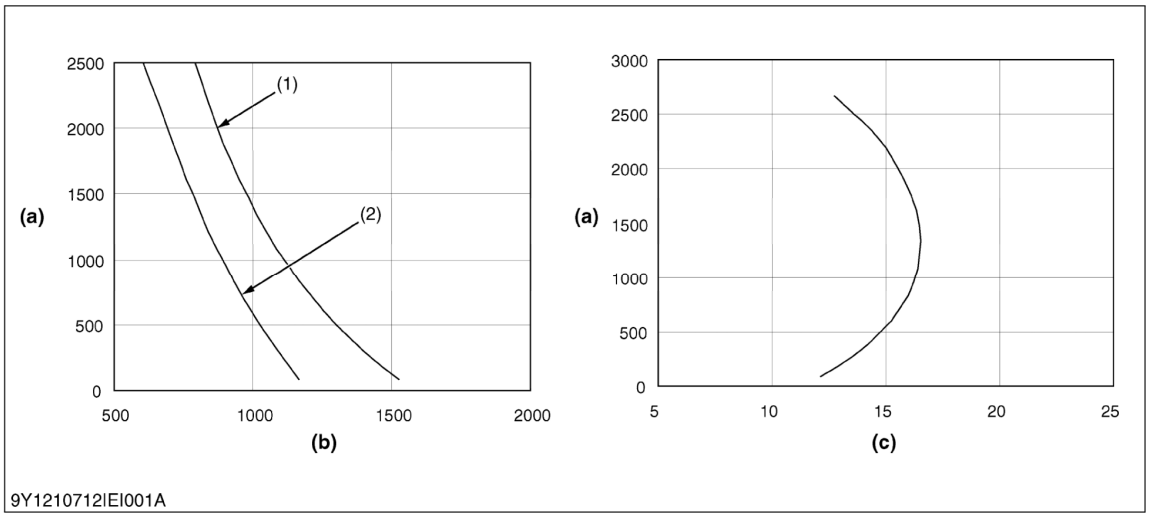

(1) At Pivot Pin
(2) 500 mm Forward of Pivot Pin

(a) Height (mm) **(b) Lift Capacity (kg)** **(c) Rollback Force (kN)**

9Y1210712INI0010US0

G GENERAL

GENERAL

CONTENTS

1. LOADER IDENTIFICATION G-1
2. GENERAL PRECAUTIONS G-2
3. LUBRICANTS G-3
4. TIGHTENING TORQUES G-4
   [1] GENERAL USE SCREWS, BOLTS AND NUTS (FOR FRONT LOADER) G-4
   [2] STUD BOLTS G-4
   [3] AMERICAN STANDARD SCREWS, BOLTS AND NUTS WITH UNC OR UNF THREADS G-5
   [4] PLUGS AND GREASE FITTINGS G-5
   [5] HYDRAULIC FITTINGS G-6
      (1) Adapters, Elbows and Others G-6
5. MAINTENANCE CHECK LIST G-7
6. CHECK AND MAINTENANCE G-8
   [1] CHECK POINTS OF EACH USE OR DAILY G-8
   [2] CHECK POINT OF EVERY 10 HOURS G-9
   [3] CHECK POINT OF EVERY WEEK G-9
   [4] CHECK POINT OF INITIAL 20 TO 30 HOURS G-9
   [5] CHECK POINT OF EVERY 50 HOURS G-10
7. SPECIAL TOOLS G-11
   [1] SPECIAL TOOL FOR TRACTOR G-11

1. LOADER IDENTIFICATION

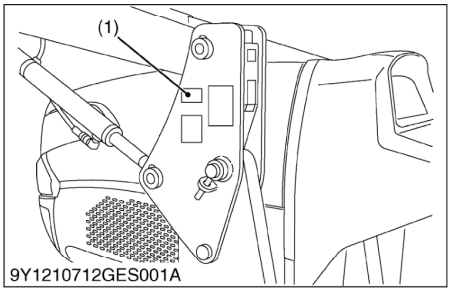

When you get contact to your local KUBOTA distributor, always show the model and front loader's serial number (1).

(1) Serial Number

9Y1210712GEG0001US0

2. GENERAL PRECAUTIONS

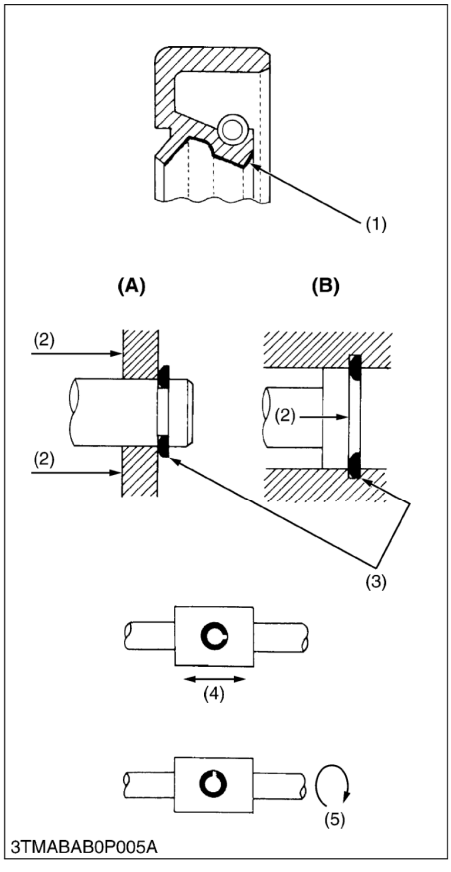

- When you disassemble, carefully put the parts in a clean area to make it easy to find the parts. You must install the screws, bolts and nuts in their initial position to prevent the reassembly errors.
- When it is necessary to use special tools, use KUBOTA special tools. Refer to the drawings when you make special tools that you do not use frequently.
- Before you disassemble or repair machine, make sure that you always disconnect the ground cable from the battery first.
- Remove oil and dirt from parts before you measure.
- Use only KUBOTA genuine parts for replacement to keep the machine performance and to make sure of safety.
- You must replace the gaskets and O-rings when you assemble again. Apply grease (1) to new O-rings or oil seals before you assemble.
- When you assemble the external or internal snap rings, make sure that the sharp edge (3) faces against the direction from which force (2) is applied.
- When inserting spring pins, their splits must face the direction from which a force is applied. See the figure left side.
- To prevent damage to the hydraulic system, use only specified fluid or equivalent.
- Clean the parts before you measure them.
- Tighten the nipples to the specified torque. Too much torque can cause damage to the hydraulic units or the nipples. Not sufficient torque can cause oil leakage.
- When you use a new hose or pipe, tighten the nuts to the specified torque. Then loosen (approx. by 45 °) and let them be stable before you tighten to the specified torque (This is not applied to the parts with seal tape).
- When you remove the two ends of a pipe, remove the lower end first.
- Use two pliers in removal and installation. One to hold the stable side, and the other to turn the side you remove to prevent twists.
- Make sure that the sleeves of flared connectors and taper s of hoses are free of dust and scratches.
- After you tighten the nipples, clean the joint and apply the maximum operation pressure 2 to 3 times to examine oil leakage.

(1) Grease
(2) Force
(3) Sharp Edge
(4) Axial Force
(5) Rotating Movement

(A) External Snap Ring
(B) Internal Snap Ring

WSM000001GEG0106US1

3. LUBRICANTS

To prevent serious damage to hydraulic systems, use only specified fluid or its equivalent.

Place	Capacity	Lubricants
	L4600, L4600HST	
Transmission case (Front loader is not attached)	40.0 L 10.6 U.S.gals 8.80 Imp.gals	KUBOTA UDT or SUPER UDT fluid*
Grease fitting	Until grease overflows	Moly Ep type grease**

■ **NOTE**

- *** KUBOTA original transmission hydraulic fluid.**
- **** "Extreme pressure" and containing Molybdenum disulfide is recommended. This grease may specify "Moly Ep" on it's label.**

9Y1210712GEG0002US0

4. TIGHTENING TORQUES

[1] GENERAL USE SCREWS, BOLTS AND NUTS (FOR FRONT LOADER)

Screws, bolts and nuts whose tightening torques are not specified in this Workshop Manual should be tightened according to the table below.

Indication on top of bolt	4 No-grade or 4T						7 8.8 7T or Property class 8.8						9 10.9 9T or Property class 10.9		
Material of opponent part	**Ordinariness**			**Aluminum**			**Ordinariness**			**Aluminum**			**Ordinariness**		
Unit	**N·m**	**kgf·m**	**lbf·ft**	**N·m**	**kgf·m**	**lbf·ft**	**N·m**	**kgf·m**	**lbf·ft**	**N·m**	**kgf·m**	**lbf·ft**	**N·m**	**kgf·m**	**lbf·ft**
M6 (6 mm, 0.24 in.)	7.9 to 9.3	0.80 to 0.95	5.8 to 6.8	7.9 to 8.8	0.80 to 0.90	5.8 to 6.5	9.81 to 11.2	1.00 to 1.15	7.24 to 8.31	7.9 to 8.8	0.80 to 0.90	5.8 to 6.5	12.3 to 14.2	1.25 to 1.45	9.05 to 10.4
M8 (8 mm, 0.31 in.)	18 to 20	1.8 to 2.1	13 to 15	17 to 19	1.7 to 2.0	13 to 14	24 to 27	2.4 to 2.8	18 to 20	18 to 20	1.8 to 2.1	13 to 15	30 to 34	3.0 to 3.5	22 to 25
M10 (10 mm, 0.39 in.)	40 to 45	4.0 to 4.6	29 to 33	32 to 34	3.2 to 3.5	24 to 25	48 to 55	4.9 to 5.7	36 to 41	40 to 44	4.0 to 4.5	29 to 32	61 to 70	6.2 to 7.2	45 to 52
M12 (12 mm, 0.47 in.)	63 to 72	6.4 to 7.4	47 to 53	–	–	–	78 to 90	7.9 to 9.2	58 to 66	63 to 72	6.4 to 7.4	47 to 53	103 to 117	10.5 to 12.0	76.0 to 86.7
M14 (14 mm, 0.55 in.)	108 to 125	11.0 to 12.8	79.6 to 92.5	–	–	–	124 to 147	12.6 to 15.0	91.2 to 108	–	–	–	167 to 196	17.0 to 20.0	123 to 144
M16 (16 mm, 0.63 in.)	167 to 191	17.0 to 19.5	123 to 141	–	–	–	197 to 225	20.0 to 23.0	145 to 166	–	–	–	260 to 304	26.5 to 31.0	192 to 224
M18 (18 mm, 0.71 in.)	246 to 284	25.0 to 29.0	181 to 209	–	–	–	275 to 318	28.0 to 32.5	203 to 235	–	–	–	344 to 402	35.0 to 41.0	254 to 296
M20 (20 mm, 0.79 in.)	334 to 392	34.0 to 40.0	246 to 289	–	–	–	368 to 431	37.5 to 44.0	272 to 318	–	–	–	491 to 568	50.0 to 58.0	362 to 419

WSM000001GEG0006US0

[2] STUD BOLTS

Material of opponent part	Ordinariness			Aluminum		
Unit	**N·m**	**kgf·m**	**lbf·ft**	**N·m**	**kgf·m**	**lbf·ft**
M8 (8 mm, 0.31 in.)	12 to 15	1.2 to 1.6	8.7 to 11	8.9 to 11	0.90 to 1.2	6.5 to 8.6
M10 (10 mm, 0.39 in.)	25 to 31	2.5 to 3.2	18 to 23	20 to 25	2.0 to 2.6	15 to 18
M12 (12 mm, 0.47 in.)	30 to 49	3.0 to 5.0	22 to 36	31	3.2	23
M14 (14 mm, 0.55 in.)	62 to 73	6.3 to 7.5	46 to 54	–	–	–
M16 (16 mm, 0.63 in.)	98.1 to 112	10.0 to 11.5	72.4 to 83.1	–	–	–
M18 (18 mm, 0.71 in.)	172 to 201	17.5 to 20.5	127 to 148	–	–	–

WSM000001GEG0007US0

[3] AMERICAN STANDARD SCREWS, BOLTS AND NUTS WITH UNC OR UNF THREADS

Grade	SAE GR.5			SAE GR.8		
Unit	**N·m**	**kgf·m**	**lbf·ft**	**N·m**	**kgf·m**	**lbf·ft**
1/4	11.7 to 15.7	1.20 to 1.60	8.63 to 11.5	16.3 to 19.7	1.67 to 2.00	12.0 to 14.6
5/16	23.1 to 27.7	2.36 to 2.82	17.0 to 20.5	33 to 39	3.4 to 3.9	25 to 28
3/8	48 to 56	4.9 to 5.7	36 to 41	61 to 73	6.3 to 7.4	45 to 53
1/2	110 to 130	11.3 to 13.2	81.2 to 95.8	150 to 178	15.3 to 18.1	111 to 131
9/16	150 to 178	15.3 to 18.1	111 to 131	217 to 260	22.2 to 26.5	160 to 191
5/8	204 to 244	20.8 to 24.8	151 to 179	299 to 357	30.5 to 36.4	221 to 263

WSM000001GEG0008US1

[4] PLUGS AND GREASE FITTINGS

Shape	Size	Material of opponent part					
		Ordinariness			Aluminum		
		N·m	**kgf·m**	**lbf·ft**	**N·m**	**kgf·m**	**lbf·ft**
Tapered screw	**R1/8**	13 to 21	1.3 to 2.2	9.4 to 15	13 to 19	1.3 to 2.0	9.4 to 14
	R1/4	25 to 44	2.5 to 4.5	18 to 32	25 to 34	2.5 to 3.5	18 to 25
	R3/8	49 to 88	5.0 to 9.0	37 to 65	49 to 58	5.0 to 6.0	37 to 43
	R1/2	58.9 to 107	6.00 to 11.0	43.4 to 79.5	59 to 78	6.0 to 8.0	44 to 57
Straight screw	**G1/4**	25 to 34	2.5 to 3.5	18 to 25	–	–	–
	G3/8	62 to 82	6.3 to 8.4	46 to 60	–	–	–
	G1/2	49 to 88	5.0 to 9.0	37 to 65	–	–	–

WSM000001GEG0005US1

Grease Fittings	Thread size	O.D.	N·m	kgf·m	lbf·ft
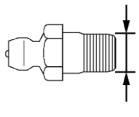	1/8-27	10.3 mm	4.1 to 6.7	0.42 to 0.68	3.0 to 5.0
	1/4-18	14.3 mm	4.1 to 6.7	0.42 to 0.68	3.0 to 5.0

9Y1210712GEG0011US0

[5] HYDRAULIC FITTINGS

(1) Adapters, Elbows and Others

Item	Shape	Thread size	Tightening torque		
			N·m	kgf·m	lbf·ft
Adjustable elbow, Adapter (O-ring port) (UNF)	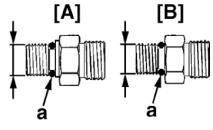 [A] Nut Type [B] No Nut Type a: O-ring	9/16	37 to 44	3.8 to 4.4	28 to 32
		3/4	48 to 54	4.9 to 5.5	36 to 39
		7/8	77 to 85	7.9 to 8.6	57 to 62
Hose fitting, Flare nut (UNF)	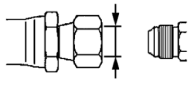	9/16	22 to 25	2.3 to 2.5	17 to 18
		3/4	36 to 40	3.7 to 4.0	27 to 29
		7/8	43 to 50	4.4 to 5.0	32 to 36
Adapter (NPT)	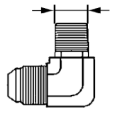	1/4	30 to 50	3.1 to 5.0	23 to 36
		3/8	39 to 60	4.0 to 6.1	29 to 44
		1/2	49 to 58	5.0 to 5.9	37 to 42

■ **NOTE**

- **When connecting a hose with flare nut, after tightening the nut with specified torque, return it approximately 45 degrees (0.79 rad) and re-tighten it to specified torque.**

WSM000001GEG0010US0

5. MAINTENANCE CHECK LIST

To keep the machine work in good condition as well as to prevent any accident and trouble, do periodic inspection and maintenance. Check the following points before use.

Service Interval	Check Points	Reference page
Daily (Each use)	Check the transmission fluid level	G-8
	Check the hardware (Main and sub frame)	G-8
	Check the hydraulic hoses	G-8
Every 10 hours	Grease all grease fittings	G-9
Every week	Lubricate quick attach coupler and joints of control lever linkage	G-9
Initial 20 to 30 hours	Re-tightening of hardware	G-9
Every 50 hours	Check the main frame and sub frame bolt torques	G-10

9Y1210712GEG0003US0

6. CHECK AND MAINTENANCE

CAUTION
- **For check and repair, park the tractor on flat ground and apply the parking brake.**
- **For check and repair, lower the bucket and stop the engine.**
- **Remove the key.**

9Y1210712GEG0004US0

[1] CHECK POINTS OF EACH USE OR DAILY

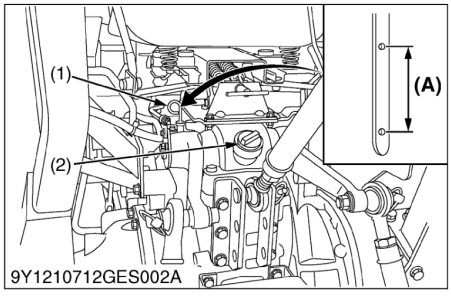

9Y1210712GES002A

Checking Transmission Fluid Level

1. Park the machine on a flat surface, lower the implement and stop the engine.
2. To check the oil level, pull out the dipstick, clean it, replace it, and pull it out again. Check to see that the oil level is between the two notches.
   If the level is too low, add new oil to the prescribed level at the oil inlet.
   (See "LUBRICANTS" in this section.)

■ **IMPORTANT**
- **If oil level is low, do not operate engine.**

(1) Dipstick
(2) Oil Inlet
(A) Oil level is acceptable within this range.

9Y1210712GEG0005US0

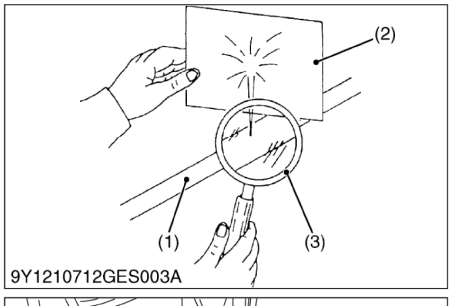

9Y1210712GES003A

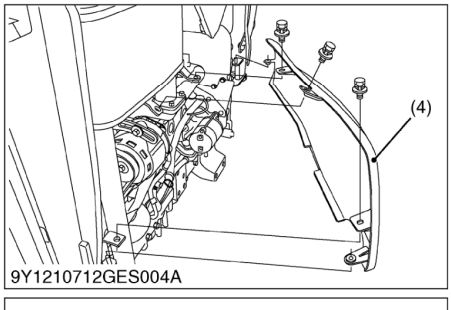

9Y1210712GES004A

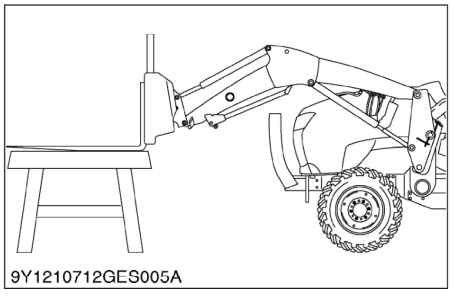
9Y1210712GES005A

Hardware (Main and Sub Frame) and Hydraulic Hoses

1. Check all hardware daily before operation.
   Tighten hardware to torque values as specified in the next page.
2. With the engine off and the bucket on the ground, examire all hoses for cuts or wear. Check for signs of leaks and make sure all fittings are tight.

WARNING

To avoid serious personal injury:
- **Hydraulic fluid splash under pressure can have sufficient force to go into skin and cause serious personal injury. Before disconnecting lines, be sure to relieve all pressure. Before applying pressure to the system, be sure all connections are tight and that lines, tubes, and hoses are not damaged. Fluid escaping from a very small hole can be almost invisible. Use a piece of cardboard or wood, rather than your hands, to look for suspected leaks.**
  If injured by escaping fluid, see a doctor at once. Serious infection or allergic reaction will occur if you do not get proper medical treatment immediately.
- **When removing the engine side covers (4), be careful not to touch hot loader cylinders.**
  Allow all surfaces to cool before maintenance.
- **Before servicing the loader or the tractor, be sure to lower the loader boom in contact with the ground. If the loader boom must be lifted during service or maintenance, hold the boom as shown in the figure.**

(1) Hydraulic Line
(2) Cardboard
(3) Magnifying Glass
(4) Engine Side Cover

9Y1210712GEG0006US0

[2] CHECK POINT OF EVERY 10 HOURS

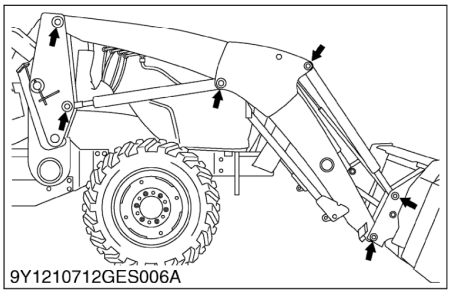
9Y1210712GES006A

Lubrication

1. Lubricate all grease fittings every 10 hours of operation. Also, lubricate joints of control lever linkage every 10 hours. High quality grease "extreme pressure" and containing molybdenum disulfide is recommended. This grease may specify "Moly EP" on its label.
2. Daily before operation, check the tractor hydraulic fluid level. If low, add as in the previous page. Also change the filter element and the hydraulic fluid as recommended in the tractor's operator's manual.

9Y1210712GEG0007US0

[3] CHECK POINT OF EVERY WEEK

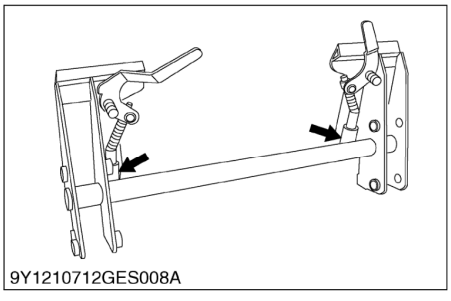
9Y1210712GES008A

Lubricating Quick Attach Coupler and Tightening

Attachments are attached to the quick attach coupler with an over center latching system. It is important that these parts are kept clean, lubricated and free from debris.

1. Keep the latching pins and latching handles free from debris. Lubricate the latching pins weekly with grease.
2. Keep the latching handles tight. If the handles become loose, tighten the hex nut slightly to remove any play from the handles.
3. Clean the saddle, at the top of the attachment, and the latching pin slots of any dirt and debris before you attach an attachment to the quick attach coupler.

9Y1210712GEG0008US0

[4] CHECK POINT OF INITIAL 20 TO 30 HOURS

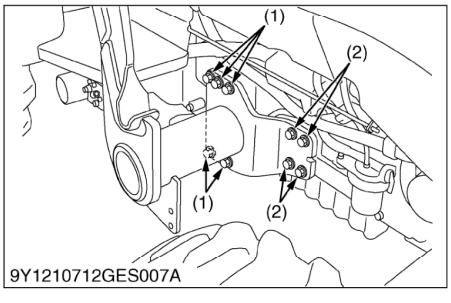

9Y1210712GES007A

Re-tightening of Hardware

After 20 to 30 hours of initial loader operation, re-tighten all mounting bolts and nuts to the required torque value as follows.

Tightening torque	Main frame bolts (M16)	226 N·m 23.0 kgf·m 166 lbf·ft

(1) 10-M16 × 45 Bolt
10-M16 Spring Lock Washer
10-5/8 Hardened Plain Washer

(2) 8-M16 × 45 Bolt
8-M16 Spring Lock Washer

9Y1210712GEG0009US0

[5] CHECK POINT OF EVERY 50 HOURS

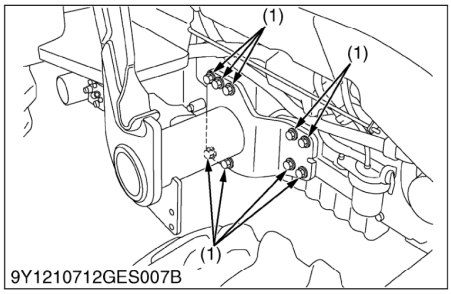

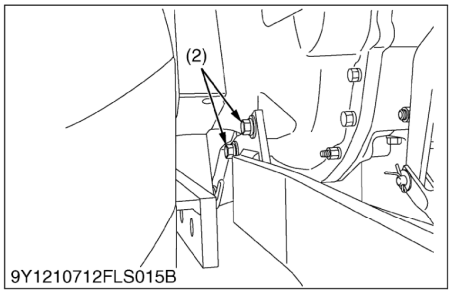

Checking Main Frame Bolt Torque

CAUTION

To avoid personal injury:

- **Never operate front loader with a loose main frame.**
- **Any time bolts and nuts are loosened, retighten to specified torque.**
- **Check all bolts and nuts frequently and keep them tight.**

Check main frame bolts (1) regularly especially when new. If they are loose, tighten them as follows.

Tightening torque	Main frame bolts (M16)	226 N·m 23.0 kgf·m 166 lbf·ft
	Sub frame mounting bolt and nut (M12)	90.2 N·m 9.20 kgf·m 66.5 lbf·ft

(1) Main Frame Bolt (2) Sub Frame Bolt

9Y1210712GEG0010US0

7. SPECIAL TOOLS

[1] SPECIAL TOOL FOR TRACTOR

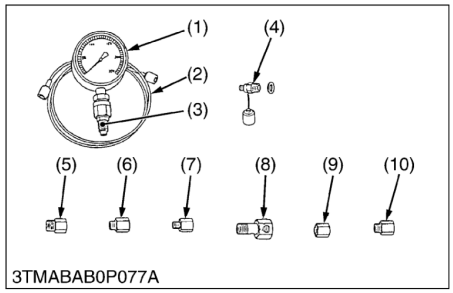

3TMABAB0P077A

Relief Valve Pressure Tester

Code No.

- 07916-50045

Application

- This allows easy measurement of relief set pressure.

(1) Gauge (07916-50322)
(2) Cable (07916-50331)
(3) Threaded Joint (07916-50401)
(4) Threaded Joint (07916-50341)
(5) Adaptor **B** (M18 × P1.5) (07916-50361)
(6) Adaptor **C** (PS3/8) (07916-50371)
(7) Adaptor **D** (PT1/8) (07916-50381)
(8) Adaptor **E** (PS3/8) (07916-50392)
(9) Adaptor **F** (PF1/2) (07916-62601)
(10) Adaptor **58** (PT1/4) (07916-52391)

WSM000001GEG0027US0

1 FRONT LOADER

MECHANISM

CONTENTS

1. HYDRAULIC CIRCUIT 1-M1
2. HYDRAULIC BLOCK 1-M2
   [1] STRUCTURE 1-M3
3. CONTROL VALVE ASSEMBLY 1-M4
   [1] STRUCTURE 1-M4
   [2] OPERATION 1-M5
      (1) Neutral 1-M5
      (2) Up 1-M6
      (3) Down 1-M7
      (4) Floating 1-M8
      (5) Roll-back 1-M9
      (6) Dump 1-M10

1. HYDRAULIC CIRCUIT

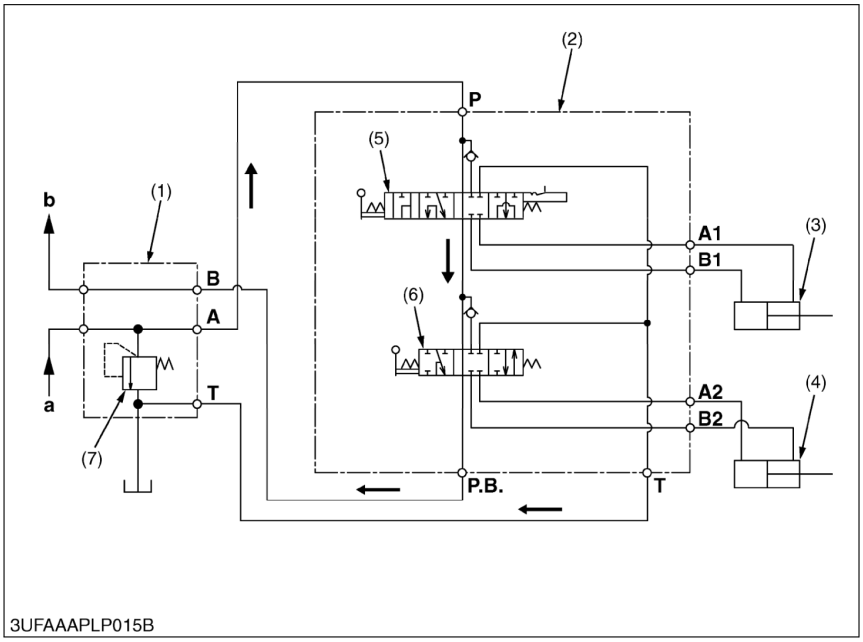

(1) Hydraulic Block
(2) Control Valve Assembly
(3) Boom Cylinder
(4) Bucket Cylinder
(5) Boom Control Valve
(6) Bucket Control Valve (3 Position Type)
(7) Relief Valve

P: P Port
T: T Port
A1: A1 Port
B1: B1 Port
A2: A2 Port
B2: B2 Port
PB: Power Beyond Port

a: From Pump
b: To 3-Point Hydraulic System

To operate the front loader, the hydraulic oil pressurized by the hydraulic pump flows from **P** port through the boom control valve (5) and the bucket control valve (6) to **PB** port.

9Y1210712FLM0001US0

Product: Kubota LA764 Service Manual
Full Download: https://www.arepairmanual.com/downloads/kubota-la764-service-manual/

2. HYDRAULIC BLOCK

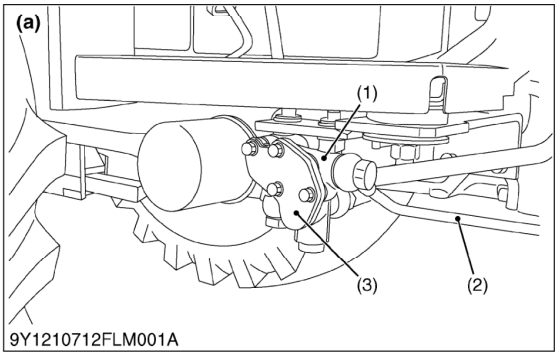

9Y1210712FLM001A

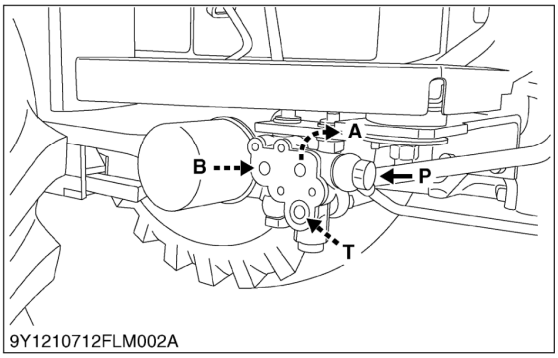

9Y1210712FLM002A

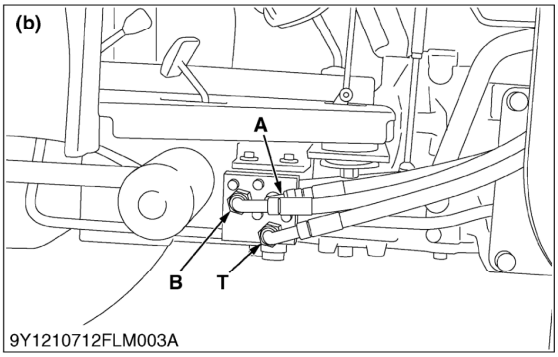

9Y1210712FLM003A

Filtered oil is sent out by the hydraulic pump to the hydraulic block (1) through the delivery pipe (2).

There is a relief valve in hydraulic block.

(a) When Front Loader is not Attached

1. Oil from the hydraulic pump goes to 3-point hydraulic system through the hydraulic block (1).

(b) When Front Loader is Attached

1. Oil from the hydraulic pump is sent into the **P** port of the control valve through the hydraulic block (1).
2. Oil from the **PB** (power beyond) port of loader control valve is sent into the three point hydraulic system through the **B** port of the hydraulic block.
3. Oil from the **T** (tank) port of the loader control valve is sent into the transmission case through the tank port of the hydraulic block (1).

(1) Hydraulic Block
(2) Delivery Pipe
(3) Block Cover

P: From Gear Pump (P Port)
A: To Implement (A Port) Max Flow 31.7 L/min (8.4 U.S. gals/min, 7.0 Imp. gals/min) Max Pressure 17.7 MPa (180 kgf/cm^2, 2560 psi)
B: From Implement (Outlet) (B Port)
T: From Implement (Tank Port)

9Y1210712FLM0002US0

Sample of manual. Download All 61 pages at:
https://www.arepairmanual.com/downloads/kubota-la764-service-manual/